规格书编号

SPEC NO :

产品规格书
SPECIFICATION

CUSTOMER 客 户：

PRODUCT 产 品：SAW FILTER

MODEL NO 型 号：HDF433M1 SMD-6

PREPARED 编 制： CHECKED 审 核：

APPROVED 批 准： D A T E 日 期：2009-10-28

客户确认 CUSTOMER RECEIVED:		
审核 CHECKED	批准 APPROVED	日期 DATE

无锡市好达电子有限公司

Shoulder Electronics Limited

更改历史记录
History Record

更改日期 Date	规格书编号 Spec. No.	产品型号 Part No.	客户产品型号 Customer No.	更改内容描述 Modify Content	备注 Remark

1.Features

•High stability and reliability with good performance and no adjustment.
•Low insertion loss and deep stop band attenuation for interference.

2. ELECTRICAL SPECIFICATION

Items	Rating	unit
Input Signal Level	10	dBm
DC Permissive Voltage	6	V_{dc}
Storage Temperature Range	-40 ~ +85	℃

Electronic Characteristics

2-1.Typical frequency response

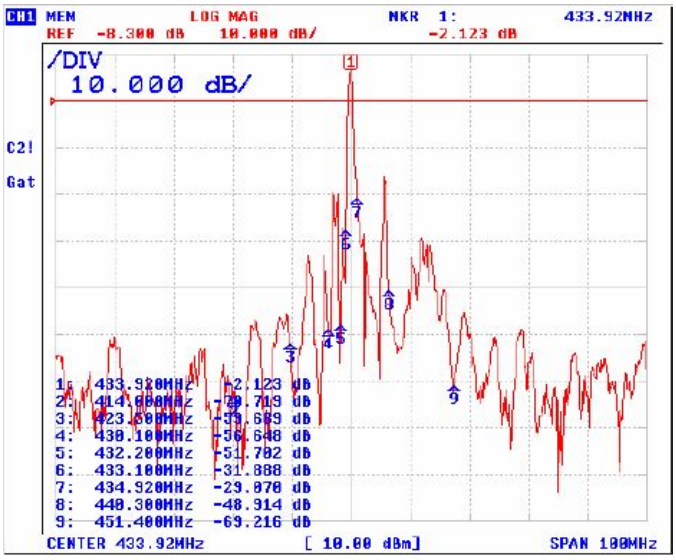

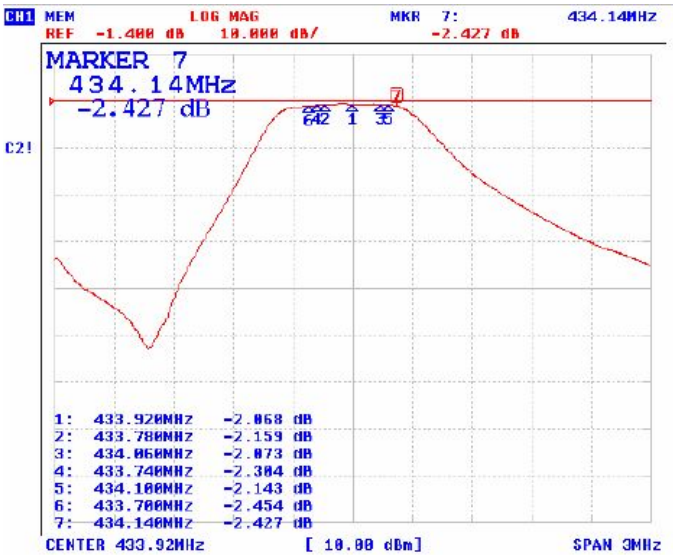

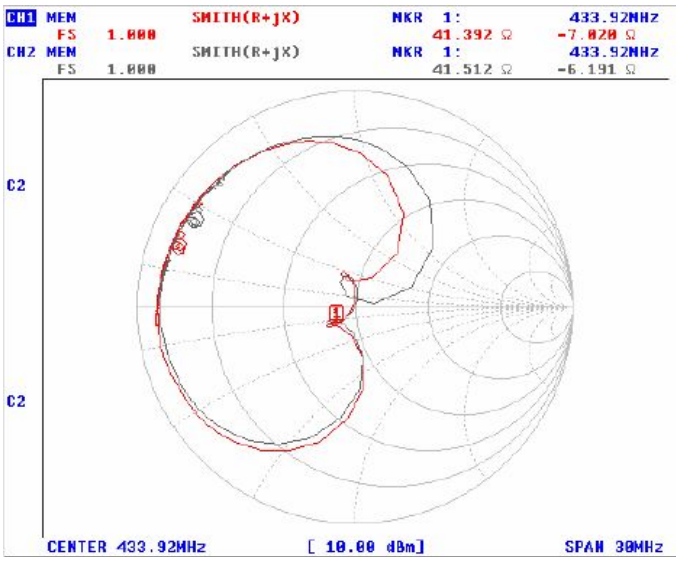

2-2.Electrical characteristics

Items	Test Condition	Min	Typ	Max	Unit
Center Frequency	-	-	433.92	-	MHz
Insertion Loss	F_O	-	2.4	3.2	dB
Amplitude Ripple(p-p)	433.78~434.06MHz	-	0.2	2.0	dB
	433.74~434.10MHz		0.3	3.0	dB
	433.70~434.14MHz		0.5	6.0	dB
3dB Bandwidth	$F_{O\ (-3dB)}$	0.65	0.72	0.79	MHz
Attenuation	10.00~414.00 MHz	55	60	-	dB
	414.00~423.50MHz	42	55	-	dB
	423.50~430.10MHz	35	42	-	dB
	430.10~432.20MHz	22	28	-	dB
	432.20~433.10MHz	18	35	-	dB
	434.92~440.30MHz	18	27	-	dB
	440.30~451.40MHz	30	35	-	dB
	451.40~810.00MHz	47	53	-	dB
	810.00~2500.00MHz	60	65	-	dB

3. TEST CIRCUIT

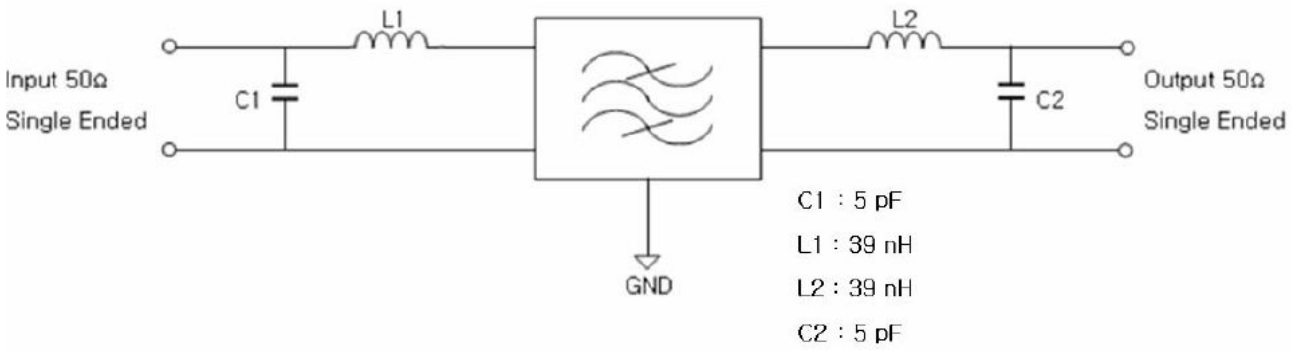

4. DIMENSION

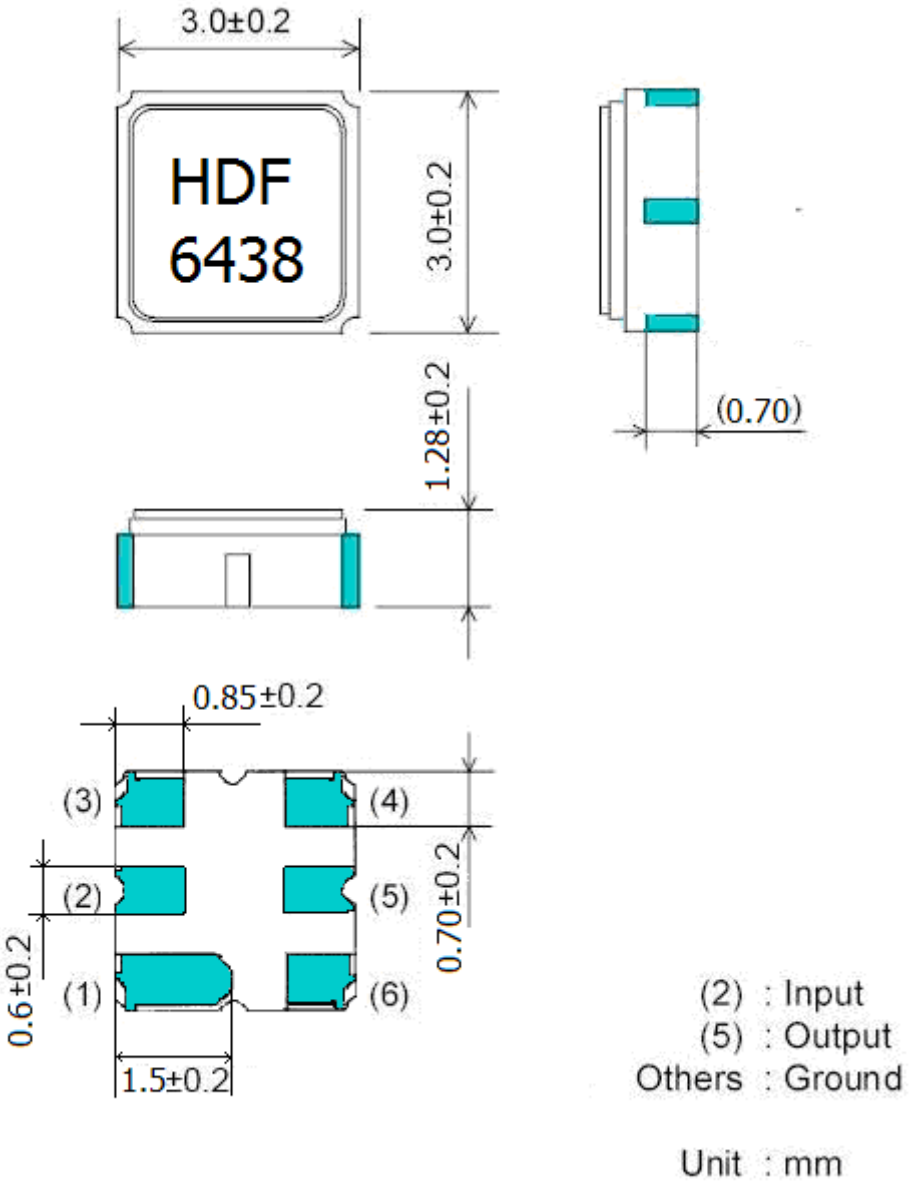

5. ENVIRONMENTAL CHARACTERISTICS

5-1 Temperature cycling

Subject the device to a low temperature of -40℃ for 30 minutes. Following by a high temperature of +25℃ for 5 Minutes and a higher temperature of +80℃ for 30 Minutes. Then release the device into the room conditions for 1 to 2 hours prior to the measurement. It shall meet the specifications in 2-2.

5-2 Resistance to solder heat

Submerge the device terminals into the solder bath at 260℃ ±5℃ for 10±1 sec. Then release the device into the room conditions for 4 hours. It shall meet the specifications in 2-2.

5-3 Solderability

Submerge the device terminals into the solder bath at 245℃ ±5℃ for 5s, More than 95% area of the soldering pad must be covered with new solder. It shall meet the specifications in 2-2.

5-4 Mechanical shock

Drop the device randomly onto the concrete floor from the height of 1 m 3 times. the filter shall fulfill the specifications in 2-2.

5-5 Vibration

Subject the device to the vibration for 2 hour each in x,y and z axes with the amplitude of 1.5 mm at 10 to 55 hz. The filter shall fulfill the specifications in 2-2.

6. REMARK

6.1 Static voltage

Static voltage between signal load & ground may cause deterioration &destruction of the component. Please avoid static voltage.

6.2 Ultrasonic cleaning

Ultrasonic vibration may cause deterioration & destruction of the component. Please avoid ultrasonic cleaning

6.3 Soldering

Only leads of component may be soldered. Please avoid soldering another part of component.

7. Packing

7.1 Dimensions

(1) Carrier Tape: Figure 1

(2) Reel: Figure 2

(3) The product shall be packed properly not to be damaged during transportation and storage.

7.2 Reeling Quantity

1000 pcs/reel 7”

3000 pcs/reel 13’’

7.3 Taping Structure

(1) The tape shall be wound around the reel in the direction shown below.

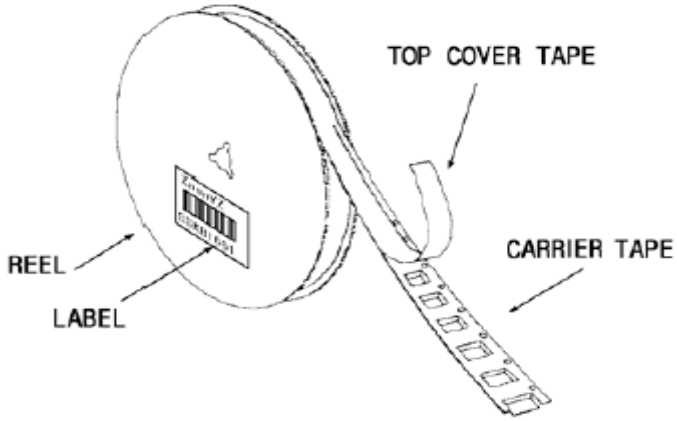

(2) Label

Device Name	
User Product Name	
Quantity	
Lot No.	

(3) Leader part and vacant position specifications.

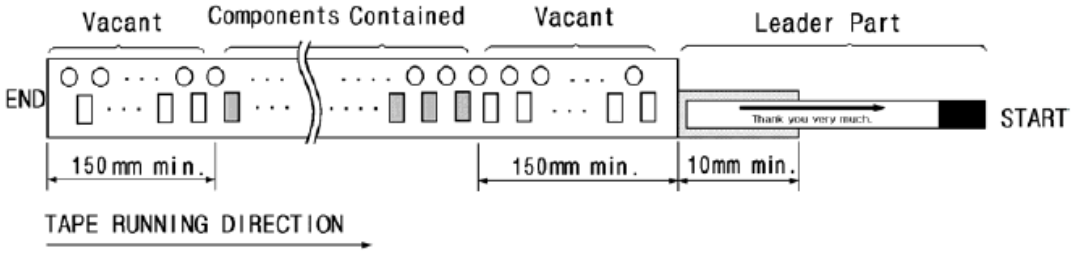

8. TAPE SPECIFICATIONS

8.1 Tensile Strength of Carrier Tape: 4.4N/mm width

8.2 Top Cover Tape Adhesion (See the below figure)

(1) pull off angle: 0~15°
(2) speed: 300mm/min.
(3) force: 20~70g

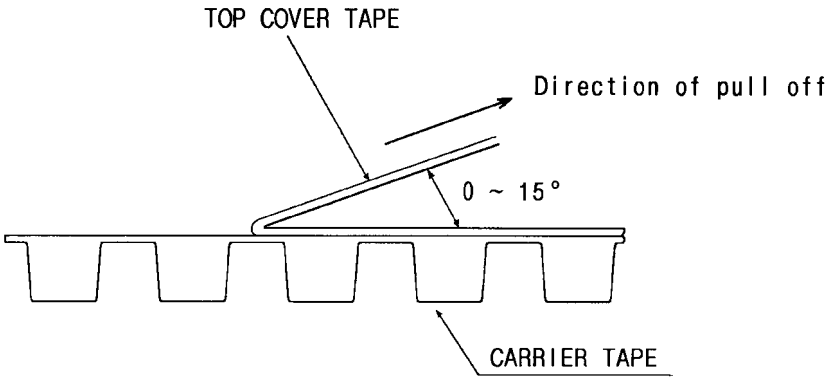

[Figure 1] Carrier Tape Dimensions

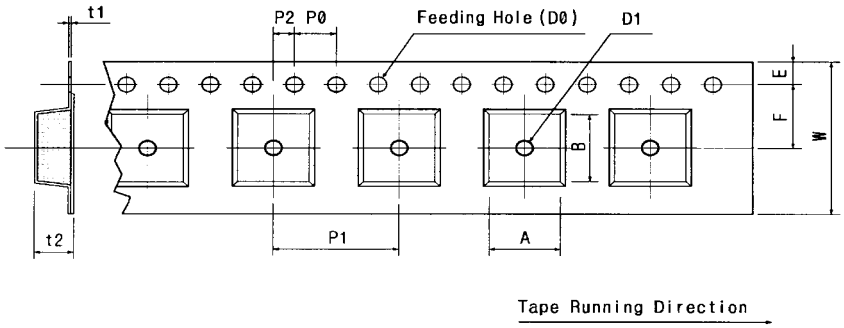

[Unit:mm]

W	F	E	P0	P1	P2	D0	D1	t1	t2	A	B
12.00 ±0.30	5.50 ±0.10	1.75 ±0.10	4.00 ±0.10	4.00 ±0.10	2.00 ±0.10	Ø1.50	Ø1.5 ±0.25	0.31 ±0.05	1.30 ±0.10	3.4 MAX.	3.4 MAX

[Figure 2]

[Unit:mm]

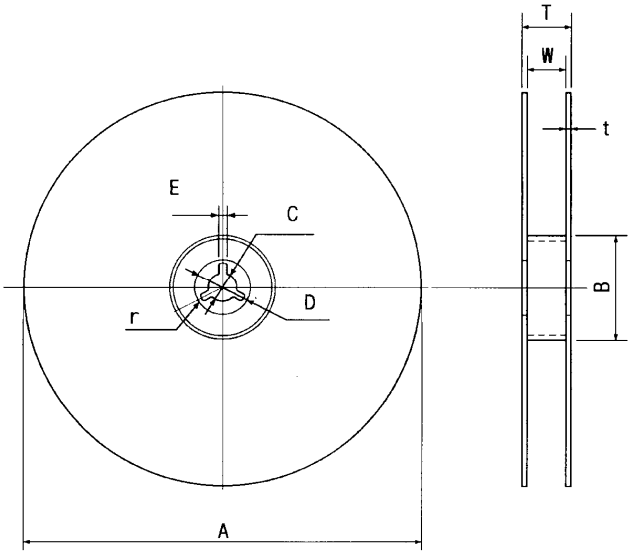

A	B	C	D	E	W	t	r

Ø330 ±1.0	Ø100 ±0.5	Ø13 ±0.5	Ø21 ±0.8	2 ±0.5	13 ±0.3	3 max.	1.0 max.