HD3SS3412A 4-Channel High-Performance Differential Switch

1 Features

- Compatible With Multiple Interface Standards Operating up to 12 Gbps Including PCI Express Gen III and USB 3.0
- Wide –3-dB Differential BW of Over 8 GHz
- Excellent Dynamic Characteristics (at 4 GHz)
  - Crosstalk = –35 dB
  - Off Isolation = –19 dB
  - Insertion Loss = –1.5 dB
  - Return Loss = –11 dB
- Bidirectional "MUX/De-MUX" Type Differential Switch
- VDD Operating Range 3.3 V ±10%
- Small 3.5-mm × 9.0-mm, 42-Pin WQFN Package
- Common Industry Standard Pinout
- Supports XAUI and SGMII

2 Applications

- Desktop and Notebook PCs
- Server and Storage Area Networks
- PCI Express Backplanes
- Shared I/O Ports

3 Description

The HD3SS3412A device is a high-speed passive switch capable of switching four differential channels, including applications such as two full PCI Express x1 lanes from one source to one of two target locations in a PC or server application. With its bidirectional capability, the HD3SS3412A also supports applications that allow connections between one target and two source devices, such as a shared peripheral between two platforms. The HD3SS3412A has a single control line (SEL pin) which can be used to control the signal path between Port A and either Port B or Port C.

The HD3SS3412A is offered in an industry standard 42-pin WQFN package available in a common footprint shared by several other vendors. The device is specified to operate from a single supply voltage of 3.3 V over the full temperature range of 0°C to 70ºC.

Device Information[1]

PART NUMBER	PACKAGE	BODY SIZE (NOM)
HD3SS3412A	WQFN (42)	9.00 mm × 3.50 mm

(1) For all available packages, see the orderable addendum at the end of the data sheet.

HD3SS3412A Pinout

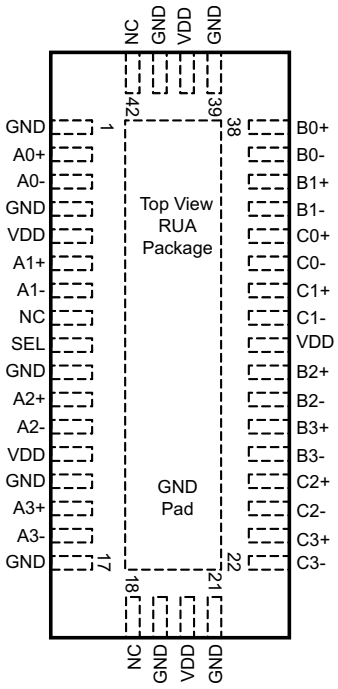

HD3SS3412A Switch Flow Through Routing

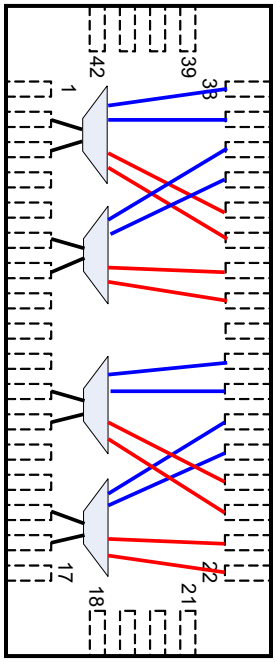

An IMPORTANT NOTICE at the end of this data sheet addresses availability, warranty, changes, use in safety-critical applications, intellectual property matters and other important disclaimers. PRODUCTION DATA.

Table of Contents

1 Features ... 1
2 Applications ... 1
3 Description ... 1
4 Revision History ... 2
5 Description (continued) ... 3
6 Pin Configuration and Functions ... 3
7 Specifications ... 6
7.1 Absolute Maximum Ratings ... 6
7.2 ESD Ratings ... 6
7.3 Recommended Operating Conditions ... 6
7.4 Thermal Information ... 6
7.5 Electrical Characteristics ... 7
7.6 Dissipation Ratings ... 7
7.7 Typical Characteristics ... 9
8 Parameter Measurement Information ... 10
9 Detailed Description ... 12
9.1 Overview ... 12
9.2 Functional Block Diagram ... 12
9.3 Feature Description ... 13
9.4 Device Functional Modes ... 13
10 Application and Implementation ... 14
10.1 Application Information ... 14
10.2 Typical Application ... 15
11 Power Supply Recommendations ... 17
12 Layout ... 17
12.1 Layout Guidelines ... 17
12.2 Layout Example ... 17
13 Device and Documentation Support ... 18
13.1 Receiving Notification of Documentation Updates 18
13.2 Community Resources ... 18
13.3 Trademarks ... 18
13.4 Electrostatic Discharge Caution ... 18
13.5 Glossary ... 18
14 Mechanical, Packaging, and Orderable Information ... 18

4 Revision History

NOTE: Page numbers for previous revisions may differ from page numbers in the current version.

DATE	REVISION	NOTES
December 2017	*	Initial release.

Copyright © 2017, Texas Instruments Incorporated

5 Description (continued)

The HD3SS3412A is a generic 4-CH high-speed MUX/de-MUX type of switch that can be used for routing high-speed signals between two different locations on a circuit board. Although it was designed specifically to address PCI Express Gen III applications, the HD3SS3412A will also support several other high-speed data protocols with a differential amplitude of <1800 mVpp and a common-mode voltage of < 2.0 V, as with USB 3.0 and DisplayPort 1.2. The device's one select input (SEL) pin can easily be controlled by an available GPIO pin within a system or from a microcontroller.

6 Pin Configuration and Functions

RUA Package
42-Pin WQFN
Top View

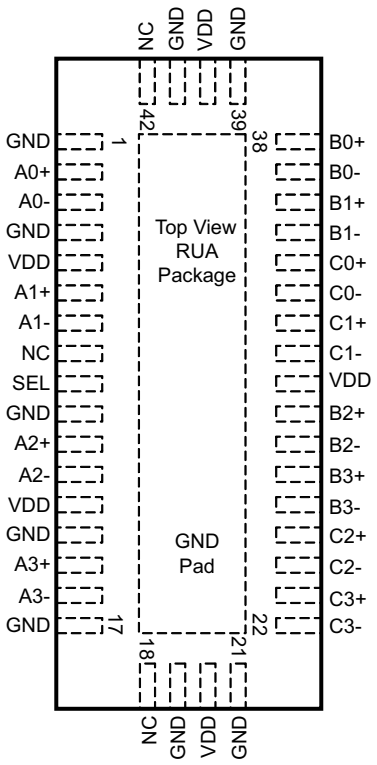

Pin Functions

PIN		I/O	DESCRIPTION
NAME	NO.		
SWITCH PORT A			
A0+	2	I/O	Port A, Channel 0, High-Speed Positive Signal
A0–	3	I/O	Port A, Channel 0, High-Speed Negative Signal
A1+	6	I/O	Port A, Channel 1, High-Speed Positive Signal
A1–	7	I/O	Port A, Channel 1, High-Speed Negative Signal
A2+	11	I/O	Port A, Channel 2, High-Speed Positive Signal
A2–	12	I/O	Port A, Channel 2, High-Speed Negative Signal
A3+	15	I/O	Port A, Channel 3, High-Speed Positive Signal
A3–	16	I/O	Port A, Channel 3, High-Speed Negative Signal
SWITCH PORT B			
B0+	38	I/O	Port B, Channel 0, High-Speed Positive Signal
B0–	37	I/O	lPort B, Channel 0, High-Speed Negative Signal

Copyright © 2017, Texas Instruments Incorporated

Pin Functions (continued)

PIN		I/O	DESCRIPTION
NAME	NO.		
B1+	36	I/O	Port B, Channel 1, High-Speed Positive Signal
B1–	35	I/O	Port B, Channel 1, High-Speed Negative Signal
B2+	29	I/O	Port B, Channel 2, High-Speed Positive Signal
B2–	28	I/O	Port B, Channel 2, High-Speed Negative Signal
B3+	27	I/O	Port B, Channel 3, High-Speed Positive Signal
B3–	26	I/O	Port B, Channel 3, High-Speed Negative Signal

Copyright © 2017, Texas Instruments Incorporated

Pin Functions (continued)

PIN		I/O	DESCRIPTION
NAME	NO.		
SWITCH PORT C			
C0+	34	I/O	Port C, Channel 0, High-Speed Positive Signal
C0–	33	I/O	Port C, Channel 0, High-Speed Negative Signal
C1+	32	I/O	Port C, Channel 1, High-Speed Positive Signal
C1–	31	I/O	Port C, Channel 1, High-Speed Negative Signal
C2+	25	I/O	Port C, Channel 2, High-Speed Positive Signal
C2–	24	I/O	Port C, Channel 2, High-Speed Negative Signal
C3+	23	I/O	Port C, Channel 3, High-Speed Positive Signal
C3–	22	I/O	Port C, Channel 3, High-Speed Negative Signal
CONTROL, SUPPLY, AND NO CONNECT			
NC	8	—	Electrically not connected. May connect to VDD or GND, or leave unconnected.
	18		
	42		
GND	1	Supply	Negative power supply voltage
	4		
	10		
	14		
	17		
	19		
	21		
	39		
	41		
	Center Pad		
SEL	9	I	Select between port B or port C. Internally tied to GND through a 100-kΩ resistor
VDD	5	Supply	Positive power supply voltage
	13		
	20		
	30		
	40		

Copyright © 2017, Texas Instruments Incorporated

7 Specifications

7.1 Absolute Maximum Ratings

Over operating free-air temperature range (unless otherwise noted)(1)(2)

		MIN	MAX	UNIT
Supply voltage (V_{DD})	Absolute minimum/maximum supply voltage	–0.5	4	V
Voltage	Differential I/O	–0.5	4	V
	Control pin (SEL)	–0.5	VDD + 0.5	
Storage temperature, T_{stg}		–65	150	°C

(1) Stresses beyond those listed under *Absolute Maximum Ratings* may cause permanent damage to the device. These are stress ratings only and functional operation of the device at these or any conditions beyond those indicated under *Recommended Operating Conditions* is not implied. Exposure to absolute-maximum-rated conditions for extended periods may affect device reliability.
(2) All voltage values, except differential voltages, are with respect to network ground terminal.

7.2 ESD Ratings

			VALUE	UNIT
$V_{(ESD)}$	Electrostatic discharge	Human-body model (HBM), per ANSI/ESDA/JEDEC JS-001(1)	±4000	V
		Charged-device model (CDM), per JEDEC specification JESD22-C101(2)	±1500	

(1) JEDEC document JEP155 states that 500-V HBM allows safe manufacturing with a standard ESD control process.
(2) JEDEC document JEP157 states that 250-V CDM allows safe manufacturing with a standard ESD control process.

7.3 Recommended Operating Conditions

Typical values for all parameters are at V_{DD} = 3.3 V and T_A = 25°C. (Temperature limits are specified by design)

			MIN	NOM	MAX	UNIT
V_{DD}	Supply voltage		3.0	3.3	3.6	V
V_{IH}	Input high voltage (SEL pin)		2.0		VDD	V
V_{IL}	Input low voltage (SEL pin)		–0.1		0.8	V
V_{I/O_Diff}	Differential voltage (differential pins)	Switch I/O diff voltage	0		1.8	VPP
V_{I/O_CM}	Common voltage (differential pins)	Switch I/O common-mode voltage	0		2.0	V
T_A	Operating free-air temperature	Ambient temperature	0		70	°C

7.4 Thermal Information

THERMAL METRIC(1)		HD3SS3412A RUA (WQFN) 42 PINS	UNIT
$R_{\theta JA}$	Junction-to-ambient thermal resistance	53.8	°C/W
$R_{\theta JC(top)}$	Junction-to-case (top) thermal resistance	38.2	°C/W
$R_{\theta JB}$	Junction-to-board thermal resistance	21.9	°C/W
ψ_{JT}	Junction-to-top characterization parameter	27.4	°C/W
ψ_{JB}	Junction-to-board characterization parameter	5.6	°C/W
$R_{\theta JC(bot)}$	Junction-to-case (bottom) thermal resistance	27.3	°C/W

(1) For more information about traditional and new thermal metrics, see the *Semiconductor and IC Package Thermal Metrics* application report.

Copyright © 2017, Texas Instruments Incorporated

7.5 Electrical Characteristics

Over operating free-air temperature range (unless otherwise noted)

PARAMETER		TEST CONDITIONS	MIN	TYP	MAX	UNIT
DEVICE PARAMETERS						
I_{IH}	Input High Voltage (SEL)	V_{DD} = 3.6 V; V_{IN} = VDD			95	µA
I_{IL}	Input Low Voltage (SEL)	V_{DD} = 3.6 V; V_{IN} = GND			1	µA
I_{LK}	Leakage Current (Differential I/O pins)	V_{DD} = 3.6 V; V_{IN} = 0 V; V_{OUT} = 2 V (I_{LK} On OPEN outputs) [Ports B and C]			130	µA
		V_{DD} = 3.6 V, V_{IN} = 2 V; V_{OUT} = 0 V (I_{LK} On OPEN outputs) [Port A]			4	
I_{DD}	Supply Current	V_{DD} = 3.6 V; SEL = V_{DD}/GND; Outputs Floating		4.7	6	mA
C_{ON}	Outputs ON Capacitance	V_{IN} = 0 V; Outputs Open; Switch ON		1.5		pF
C_{OFF}	Outputs OFF Capacitance	V_{IN} = 0 V; Outputs Open, Switch OFF		1		pF
R_{ON}	Output ON resistance	V_{DD} = 3.3 V; V_{CM} = 0.5 V to 1.5 V ; I_O = –8 mA		5	8	Ω
ΔR_{ON}	ON-resistance match between channels	V_{DD} = 3.3 V ; –0.35 V ≤ V_{IN} ≤ 1.2 V; I_O = –8 mA			2	Ω
	ON-resistance match between pairs of the same channel	V_{DD} = 3.3 V; –0.35 V ≤ V_{IN} ≤ 1.2 V; I_O = –8 mA			0.7	Ω
R_{FLAT_ON}	ON-resistance flatness ($R_{ON(MAX)}$ – $R_{ON(MAIN)}$)	V_{DD} = 3.3 V; –0.35 V ≤ V_{IN} ≤ 1.2 V			1.15	Ω
t_{PD}	Switch propagation delay	Rsc and R_{LOAD} = 50 Ω			85	ps
	SEL-to-switch T_{ON}	Rsc and R_{LOAD} = 50 Ω		70	250	ns
	SEL-to-switch T_{OFF}			70	250	
T_{SKEW_Inter}	Inter-pair output skew (CH-CH)	Rsc and R_{LOAD} = 50 Ω			20	ps
T_{SKEW_Intra}	Intra-pair output skew (bit-bit)	Rsc and R_{LOAD} = 50 Ω			8	ps
R_L	Differential return loss (VCM = 0 V) Also see *Typical Characteristics*	f = 0.3 MHz		–28		dB
		f = 2500 MHz		–12		
		f = 4000 MHz		–11		
X_{TALK}	Differential Crosstalk(VCM = 0 V) Also see *Typical Characteristics*	f = 0.3 MHz		–90		dB
		f = 2500 MHz		–39		
		f = 4000 MHz		–35		
O_{IRR}	Differential Off-Isolation(VCM = 0 V) Also see *Typical Characteristics*	f = 0.3 MHz		–75		dB
		f = 2500 MHz		–22		
		f = 4000 MHz		–19		
I_L	Differential Insertion Loss (VCM = 0 V) Also see *Typical Characteristics*	f = 0.3 MHz		–0.5		dB
		f = 2500 MHz		–1.1		
		f = 4000 MHz		–1.5		
BW	Bandwidth	At –3 dB		8		GHz

7.6 Dissipation Ratings

		MIN	MAX	UNIT
P_D	Power Dissipation	15.5	21.6	mW

Copyright © 2017, Texas Instruments Incorporated

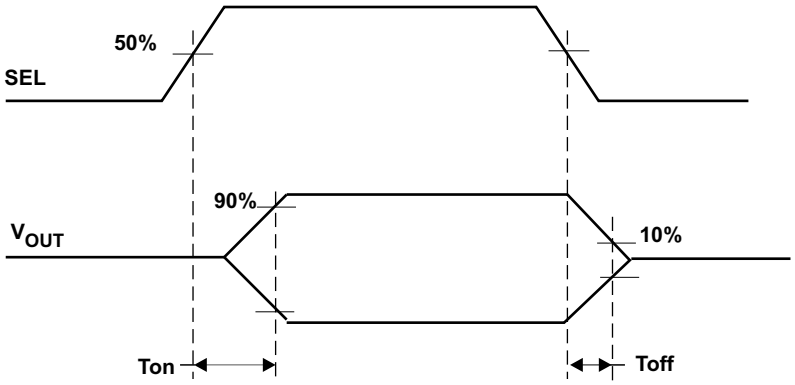

Figure 1. Switch ON and OFF Timing Diagram

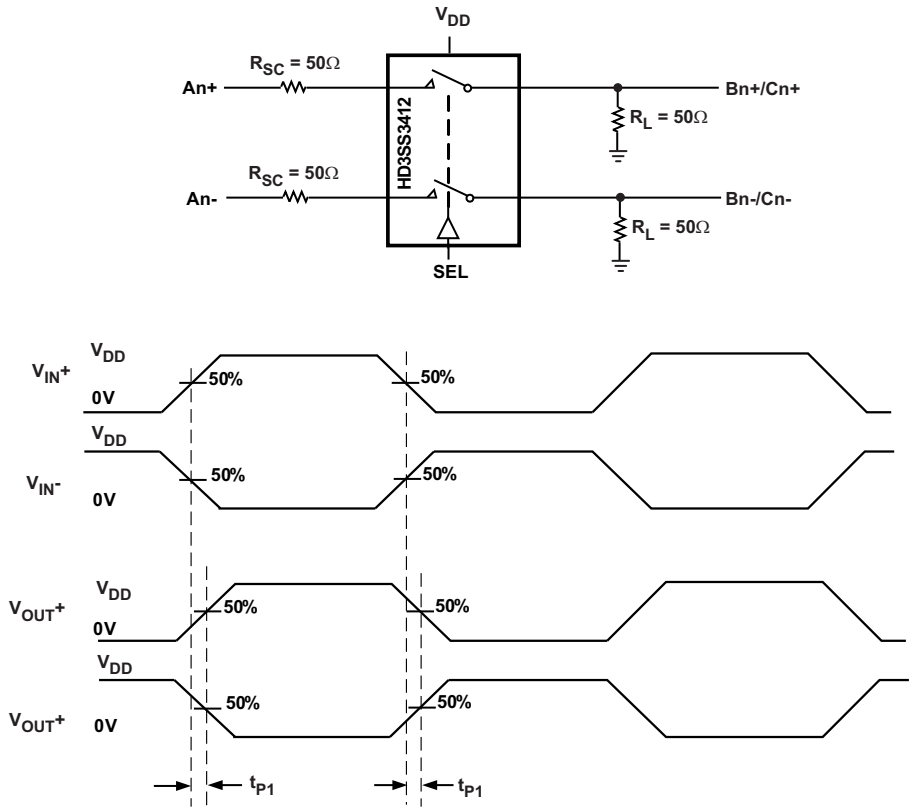

$T_{SKEWInter}$ = Difference between t_{PD} for any two pairs of outputs

$T_{SKEWIntra}$ = Difference between t_{P1} and t_{P2} of same pair

Figure 2. Propagation Delay Timing Diagram and Test Setup

Copyright © 2017, Texas Instruments Incorporated

7.7 Typical Characteristics

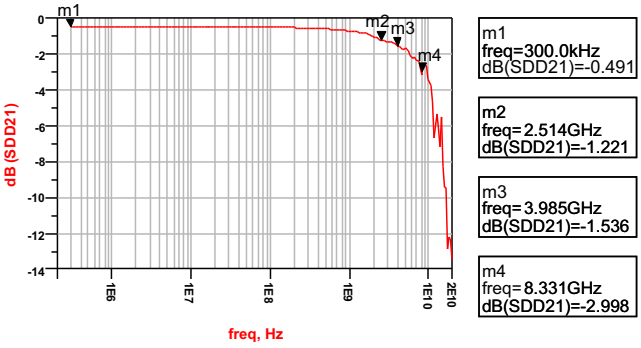

Figure 3. Differential Insertion Loss

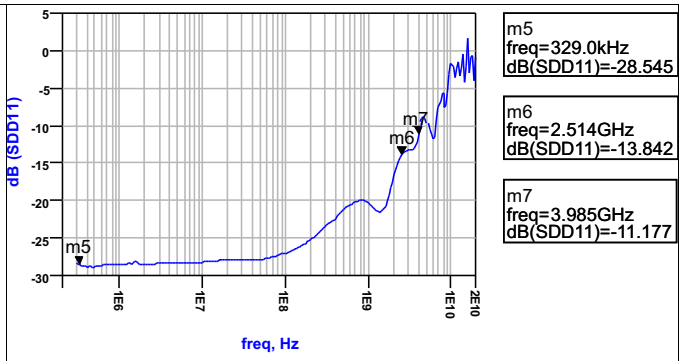

Figure 4. Differential Return Loss

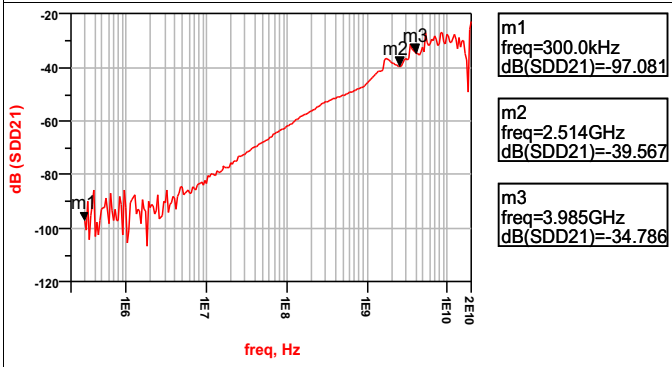

Figure 5. Differential Crosstalk

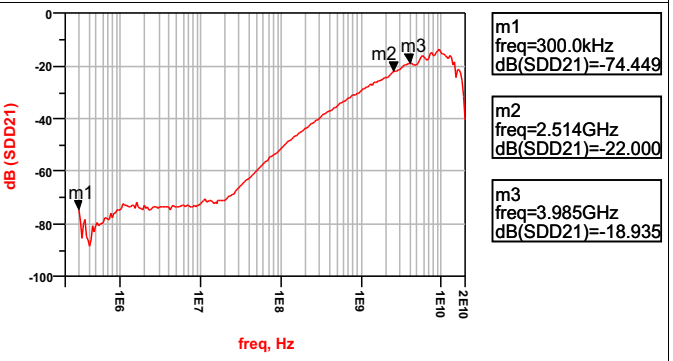

Figure 6. Differential Off Isolation

8 Parameter Measurement Information

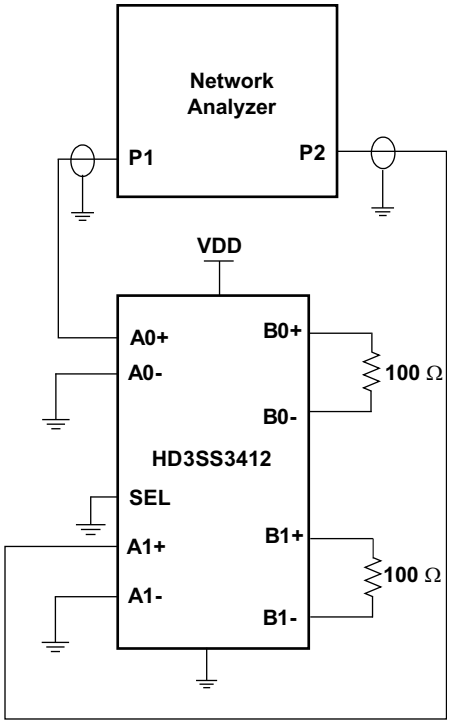

Figure 7. Cross Talk Measurement Setup

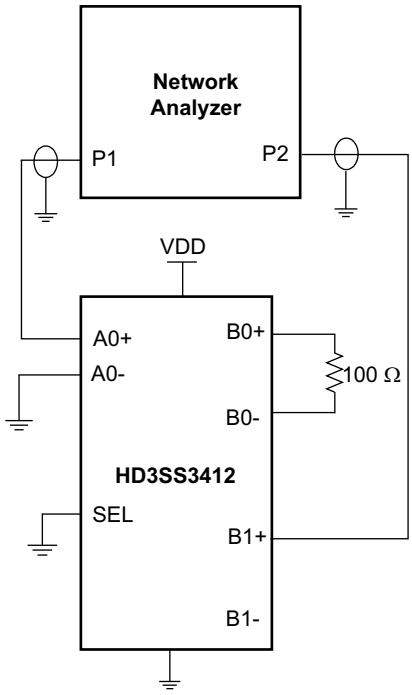

Figure 8. Off Isolation Measurement Setup

Copyright © 2017, Texas Instruments Incorporated

Parameter Measurement Information (continued)

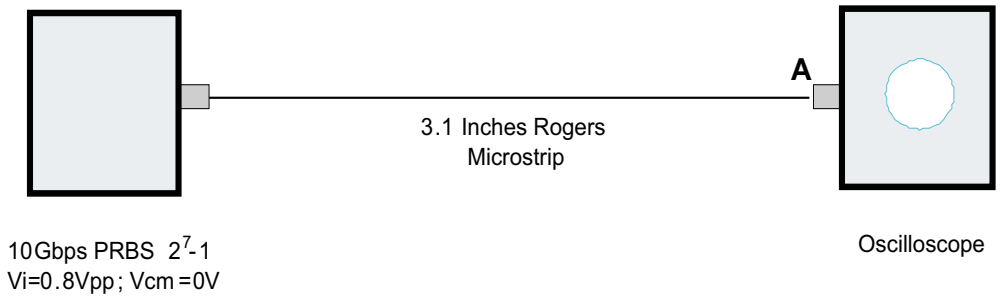

Figure 9. Source Eye Diagram Test Setup

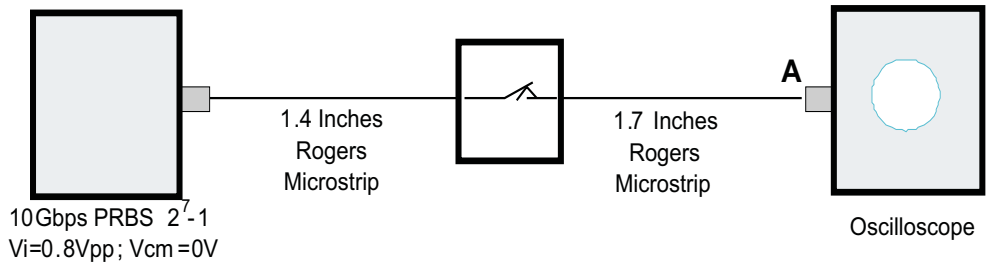

Figure 10. Output Eye Diagram Test Setup

9 Detailed Description

9.1 Overview

The HD3SS3412A is a high-speed passive switch offered in an industry standard 42-pin WQFN package available in a common footprint shared by several other vendors. The device is specified to operate from a single supply voltage of 3.3 V over the commercial temperature range of 0°C to 70°C. The HD3SS3412A is a generic 4-CH high-speed mux/demux type of switch that can be used for routing high-speed signals between two different locations on a circuit board. Although it was designed specifically to address PCI Express Gen III applications, the HD3SS3412A will also support several other high-speed data protocols with a differential amplitude of < 1800 mVpp and a common-mode voltage of < 2.0 V, as with USB 3.0 and DisplayPort 1.2. The device's one select input (SEL) pin can easily be controlled by an available GPIO pin within a system or from a microcontroller.

9.2 Functional Block Diagram

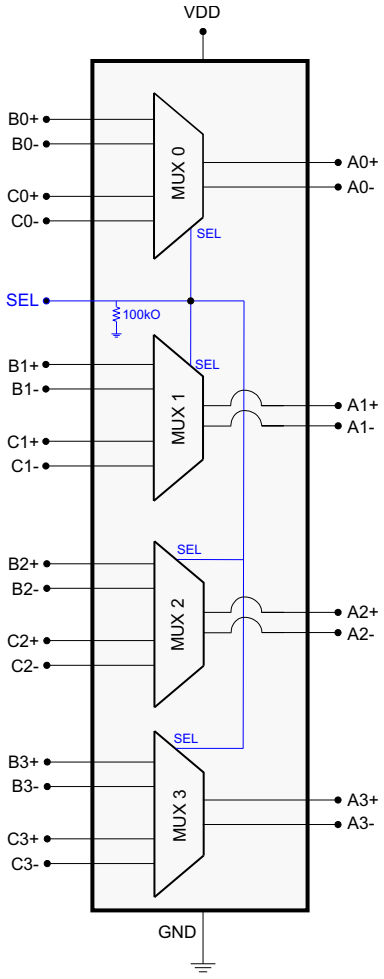

Copyright © 2017, Texas Instruments Incorporated

9.3 Feature Description

The HD3SS3412A has a single control line (SEL Pin) which can be used to control the signal path between Port A and either Port B or Port C. The one select input (SEL) pin of the device can easily be controlled by an available GPIO pin within a system or from a microcontroller. The input signal is selected using the SEL pin.

Table 1. Mux Pin Connections(1)

PORT A CHANNEL	PORT B OR PORT C CHANNEL CONNECTED TO PORT A CHANNEL	
	SEL = L	SEL = H
A0+	B0+	C0+
A0–	B0–	C0–
A1+	B1+	C1+
A1–	B1–	C1–
A2+	B2+	C2+
A2–	B2–	C2–
A3+	B3+	C3+
A3–	B3–	C3–

(1) The HD3SS3412A can tolerate polarity inversions for all differential signals on Ports A, B, and C. Take care to ensure the same polarity is maintained on Port A versus Port B/C.

9.4 Device Functional Modes

Table 2 lists the functional modes for the HD3SS3412A.

Table 2. HD3SS3412A Control Logic

CONTROL PIN (SEL)	PORT A TO PORT B CONNECTION STATUS	PORT A TO PORT C CONNECTION STATUS
L (Default State)	Connected	Disconnected
H	Disconnected	Connected

Copyright © 2017, Texas Instruments Incorporated

10 Application and Implementation

NOTE

Information in the following applications sections is not part of the TI component specification, and TI does not warrant its accuracy or completeness. TI's customers are responsible for determining suitability of components for their purposes. Customers should validate and test their design implementation to confirm system functionality.

10.1 Application Information

10.1.1 AC Coupling Caps

Many interfaces require AC coupling between the transmitter and receiver. The 0402 capacitors are the preferred option to provide AC coupling, and the 0603 size capacitors also work. The 0805 size capacitors and C-packs should be avoided. When placing AC coupling capacitors symmetric placement is best. A capacitor value of 0.1 µF is best and the value should be match for the ± signal pair. The placement should be along the TX pairs on the system board, which are usually routed on the top layer of the board.

There are several placement options for the AC coupling capacitors. Because the switch requires a bias voltage, the capacitors must only be placed on one side of the switch. If they are placed on both sides of the switch, a biasing voltage should be provided. A few placement options are shown below. In Figure 11, the coupling capacitors are placed between the switch and endpoint. In this situation, the switch is biased by the system/host controller.

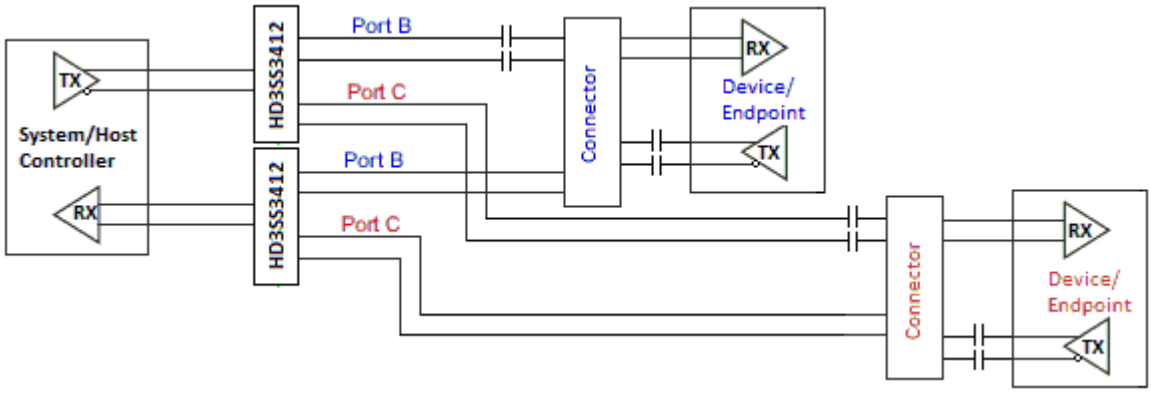

Figure 11. AC Coupling Capacitors Between Switch Tx and Endpoint Tx

In Figure 12, the coupling capacitors are placed on the host transmit pair and endpoint transmit pair. In this situation, the switch on the top is biased by the endpoint and the lower switch is biased by the host controller.

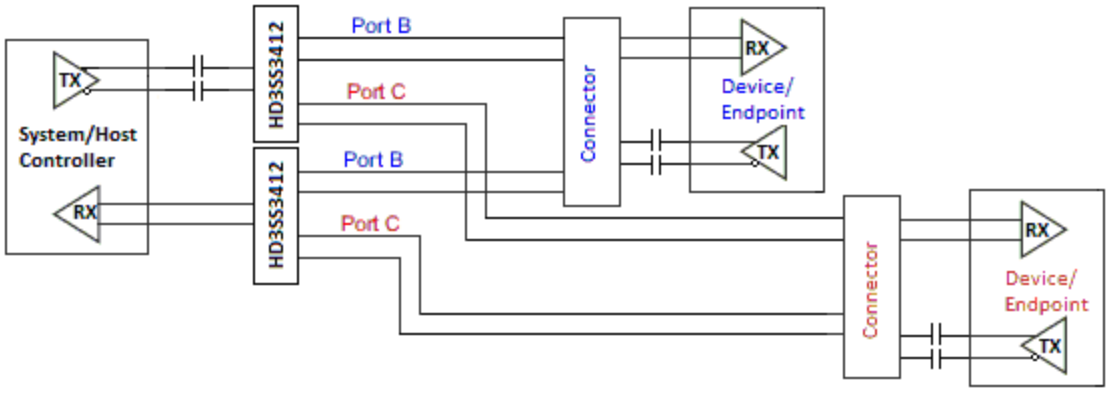

Figure 12. AC Coupling Capacitors on Host Tx and Endpoint Tx

Copyright © 2017, Texas Instruments Incorporated

Application Information (continued)

If the common-mode voltage in the system is higher than 2 V, the coupling capacitors are placed on both sides of the switch (shown in Figure 13). A biasing voltage of less than 2 V is required in this case.

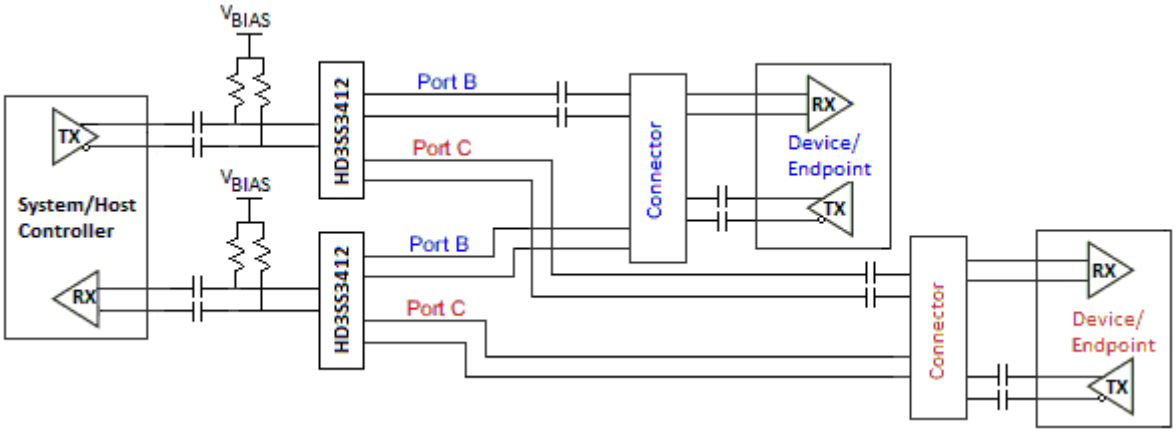

Figure 13. AC Coupling Capacitors on Both Sides of Switch

10.2 Typical Application

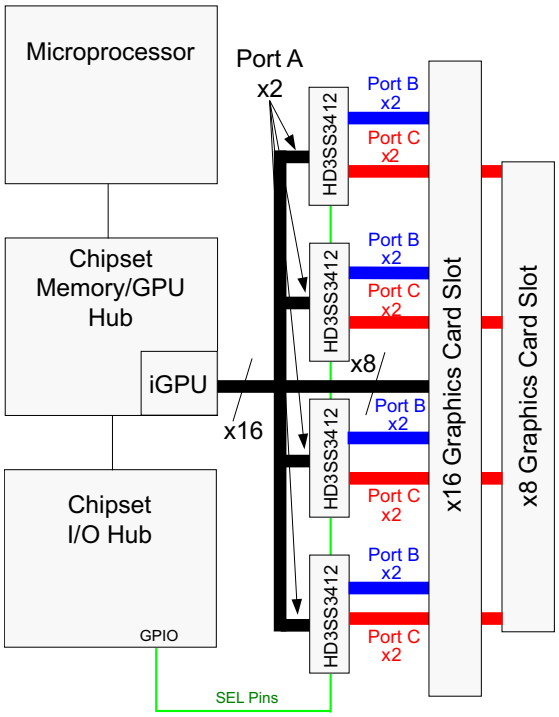

Figure 14. Typical Application Block Diagram

Typical Application (continued)

10.2.1 Design Requirements

Table 3 lists the design parameters of this example.

Table 3. Design Parameters

DESIGN PARAMETERS	EXAMPLE VALUE
Input voltage range	3.3 V
Decoupling capacitors	0.1 µF
AC capacitors	75 nF – 200 nF (100 nF shown) USBAA TX p and n lines require AC capacitors. Alternate mode signals may or may not require AC capacitors

10.2.2 Detailed Design Procedure

- Connect VDD and GND pins to the power and ground planes of the printed circuit board, with 0.1-uF bypass capacitor
- Use +3.3-V TTL/CMOS logic level at SEL
- Use controlled-impedance transmission media for all the differential signals
- Ensure the received complimentary signals are with a differential amplitude of <1800 mVpp and a common-mode voltage of <2 V

10.2.3 Application Curves

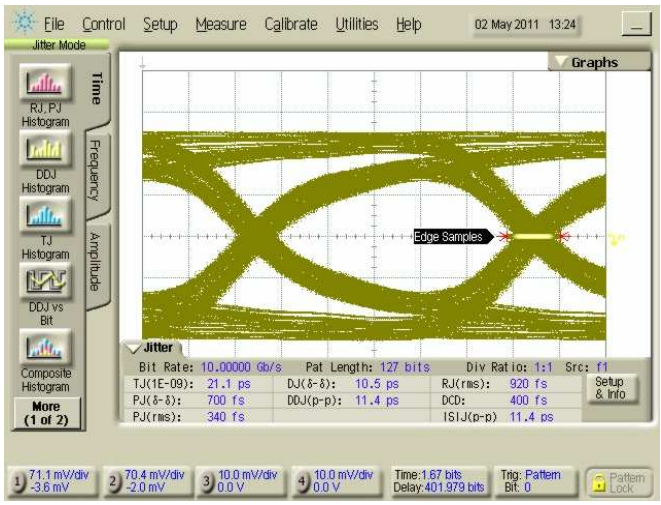

Figure 15. 10-gbps Source Eye Diagram at a: V_{ID} = 800 Mvpp; 2^7–1 Prbs; V_{CM}= 0 V

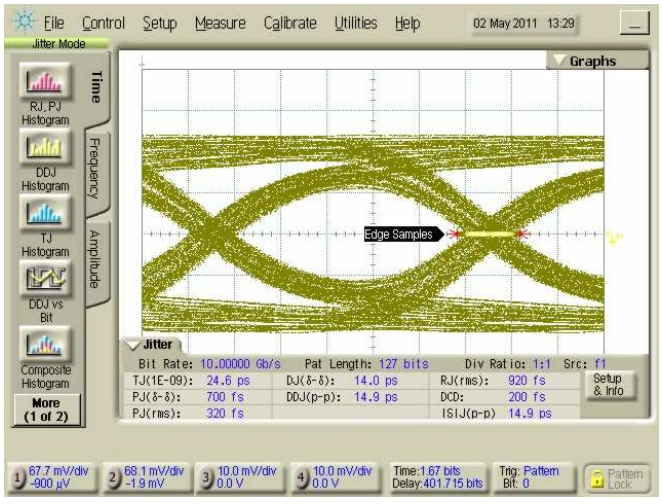

Figure 16. 10-gbps Output Eye Diagram at a: V_{ID} = 800 Mvpp; 2^7–1 Prbs; V_{CM}= 0v; V_{DD}= 3.3 V; Sel= 0 V

Copyright © 2017, Texas Instruments Incorporated

11 Power Supply Recommendations

The HD3SS3412A requires +3.3-V digital power sources. VDD 3.3 supply must have 0.1-μF bypass capacitors to VSS (ground) in order for proper operation. The recommendation is one capacitor for each power terminal. Place the capacitor as close as possible to the terminal on the device and keep trace length to a minimum. Smaller value capacitors like 0.01-μF are also recommended on the digital supply terminals.

12 Layout

12.1 Layout Guidelines

- Decoupling caps should be placed next to each power terminal on the HD3SS3412A. Take care to minimize the stub length of the race connecting the capacitor to the power pin.
- Avoid sharing vias between multiple decoupling caps
- Place vias as close as possible to the decoupling cop solder pad
- Widen VDD/GND planes to reduce effect if static and dynamic IR drop
- The VBUS traces/planes must be wide enough to carry maximum of 2-A current

12.2 Layout Example

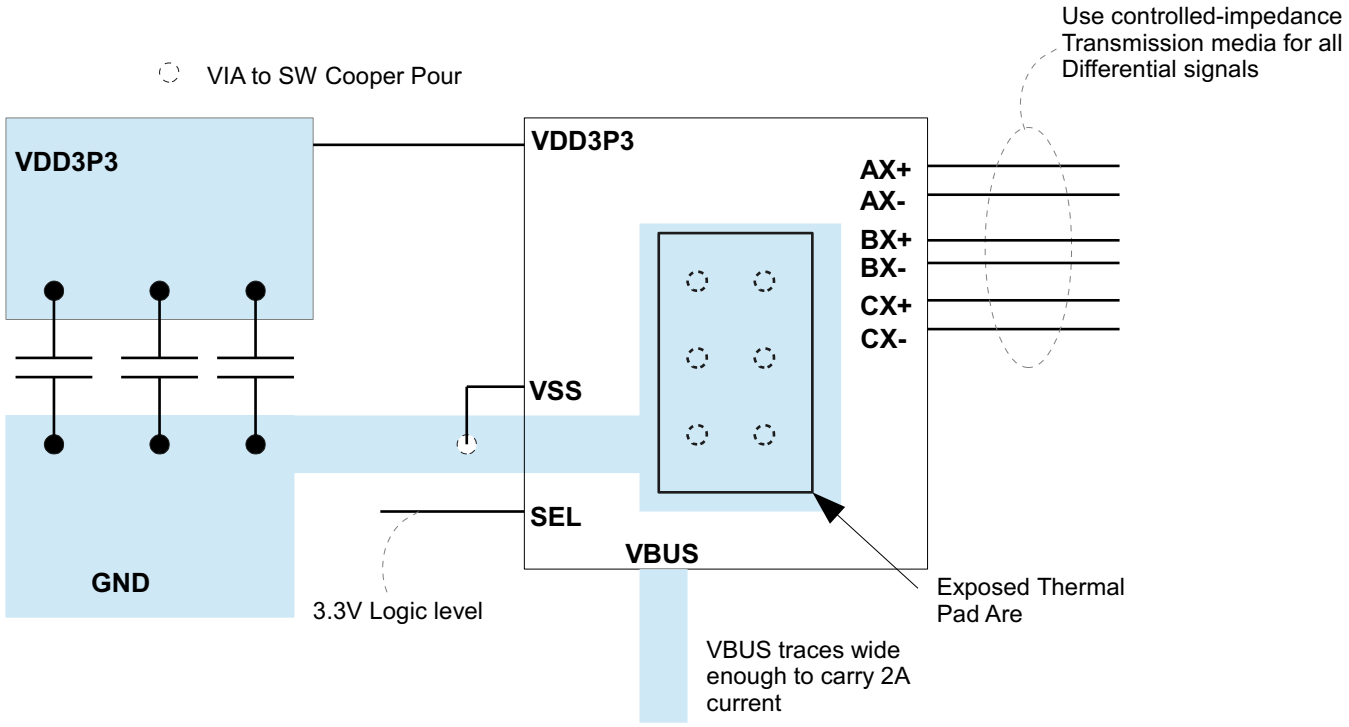

Figure 17. Layout Example

13 Device and Documentation Support

13.1 Receiving Notification of Documentation Updates

To receive notification of documentation updates, navigate to the device product folder on ti.com. In the upper right corner, click on *Alert me* to register and receive a weekly digest of any product information that has changed. For change details, review the revision history included in any revised document.

13.2 Community Resources

The following links connect to TI community resources. Linked contents are provided "AS IS" by the respective contributors. They do not constitute TI specifications and do not necessarily reflect TI's views; see TI's Terms of Use.

TI E2E™ Online Community ***TI's Engineer-to-Engineer (E2E) Community.*** Created to foster collaboration among engineers. At e2e.ti.com, you can ask questions, share knowledge, explore ideas and help solve problems with fellow engineers.

Design Support ***TI's Design Support*** Quickly find helpful E2E forums along with design support tools and contact information for technical support.

13.3 Trademarks

E2E is a trademark of Texas Instruments.
All other trademarks are the property of their respective owners.

13.4 Electrostatic Discharge Caution



This integrated circuit can be damaged by ESD. Texas Instruments recommends that all integrated circuits be handled with appropriate precautions. Failure to observe proper handling and installation procedures can cause damage.

ESD damage can range from subtle performance degradation to complete device failure. Precision integrated circuits may be more susceptible to damage because very small parametric changes could cause the device not to meet its published specifications.

13.5 Glossary

SLYZ022 — *TI Glossary*.

This glossary lists and explains terms, acronyms, and definitions.

14 Mechanical, Packaging, and Orderable Information

The following pages include mechanical, packaging, and orderable information. This information is the most current data available for the designated devices. This data is subject to change without notice and revision of this document. For browser-based versions of this data sheet, refer to the left-hand navigation.

Copyright © 2017, Texas Instruments Incorporated

PACKAGING INFORMATION

Orderable Device	Status (1)	Package Type	Package Drawing	Pins	Package Qty	Eco Plan (2)	Lead/Ball Finish (6)	MSL Peak Temp (3)	Op Temp (°C)	Device Marking (4/5)	Samples
HD3SS3412ARUAR	ACTIVE	WQFN	RUA	42	3000	Green (RoHS & no Sb/Br)	NIPDAU	Level-2-260C-1 YEAR	0 to 70	HD3SS3412	Samples
HD3SS3412ARUAT	ACTIVE	WQFN	RUA	42	250	Green (RoHS & no Sb/Br)	NIPDAU	Level-2-260C-1 YEAR	0 to 70	HD3SS3412	Samples

(1) The marketing status values are defined as follows:
ACTIVE: Product device recommended for new designs.
LIFEBUY: TI has announced that the device will be discontinued, and a lifetime-buy period is in effect.
NRND: Not recommended for new designs. Device is in production to support existing customers, but TI does not recommend using this part in a new design.
PREVIEW: Device has been announced but is not in production. Samples may or may not be available.
OBSOLETE: TI has discontinued the production of the device.

(2) **RoHS:** TI defines "RoHS" to mean semiconductor products that are compliant with the current EU RoHS requirements for all 10 RoHS substances, including the requirement that RoHS substance do not exceed 0.1% by weight in homogeneous materials. Where designed to be soldered at high temperatures, "RoHS" products are suitable for use in specified lead-free processes. TI may reference these types of products as "Pb-Free".
RoHS Exempt: TI defines "RoHS Exempt" to mean products that contain lead but are compliant with EU RoHS pursuant to a specific EU RoHS exemption.
Green: TI defines "Green" to mean the content of Chlorine (Cl) and Bromine (Br) based flame retardants meet JS709B low halogen requirements of <=1000ppm threshold. Antimony trioxide based flame retardants must also meet the <=1000ppm threshold requirement.

(3) MSL, Peak Temp. - The Moisture Sensitivity Level rating according to the JEDEC industry standard classifications, and peak solder temperature.

(4) There may be additional marking, which relates to the logo, the lot trace code information, or the environmental category on the device.

(5) Multiple Device Markings will be inside parentheses. Only one Device Marking contained in parentheses and separated by a "~" will appear on a device. If a line is indented then it is a continuation of the previous line and the two combined represent the entire Device Marking for that device.

(6) Lead/Ball Finish - Orderable Devices may have multiple material finish options. Finish options are separated by a vertical ruled line. Lead/Ball Finish values may wrap to two lines if the finish value exceeds the maximum column width.

Important Information and Disclaimer: The information provided on this page represents TI's knowledge and belief as of the date that it is provided. TI bases its knowledge and belief on information provided by third parties, and makes no representation or warranty as to the accuracy of such information. Efforts are underway to better integrate information from third parties. TI has taken and continues to take reasonable steps to provide representative and accurate information but may not have conducted destructive testing or chemical analysis on incoming materials and chemicals. TI and TI suppliers consider certain information to be proprietary, and thus CAS numbers and other limited information may not be available for release.

In no event shall TI's liability arising out of such information exceed the total purchase price of the TI part(s) at issue in this document sold by TI to Customer on an annual basis.

TAPE AND REEL INFORMATION

REEL DIMENSIONS

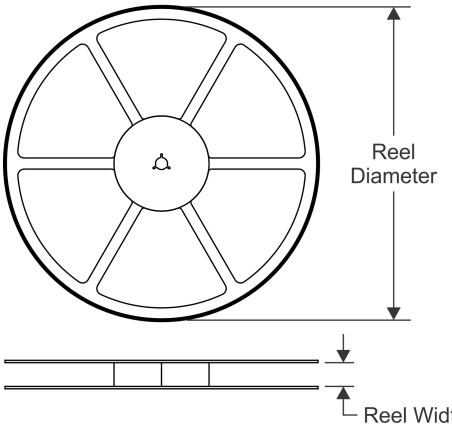

TAPE DIMENSIONS

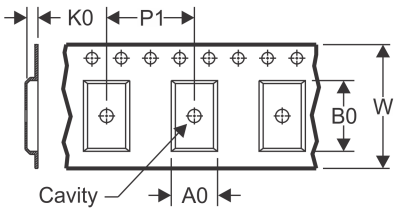

A0	Dimension designed to accommodate the component width
B0	Dimension designed to accommodate the component length
K0	Dimension designed to accommodate the component thickness
W	Overall width of the carrier tape
P1	Pitch between successive cavity centers

QUADRANT ASSIGNMENTS FOR PIN 1 ORIENTATION IN TAPE

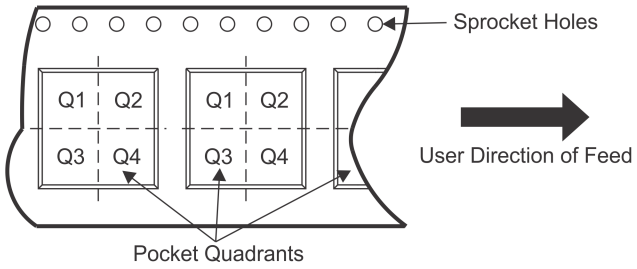

*All dimensions are nominal

Device	Package Type	Package Drawing	Pins	SPQ	Reel Diameter (mm)	Reel Width W1 (mm)	A0 (mm)	B0 (mm)	K0 (mm)	P1 (mm)	W (mm)	Pin1 Quadrant
HD3SS3412ARUAR	WQFN	RUA	42	3000	330.0	24.4	3.9	9.4	1.0	8.0	24.0	Q1
HD3SS3412ARUAT	WQFN	RUA	42	250	180.0	24.4	3.9	9.4	1.0	8.0	24.0	Q1

TAPE AND REEL BOX DIMENSIONS

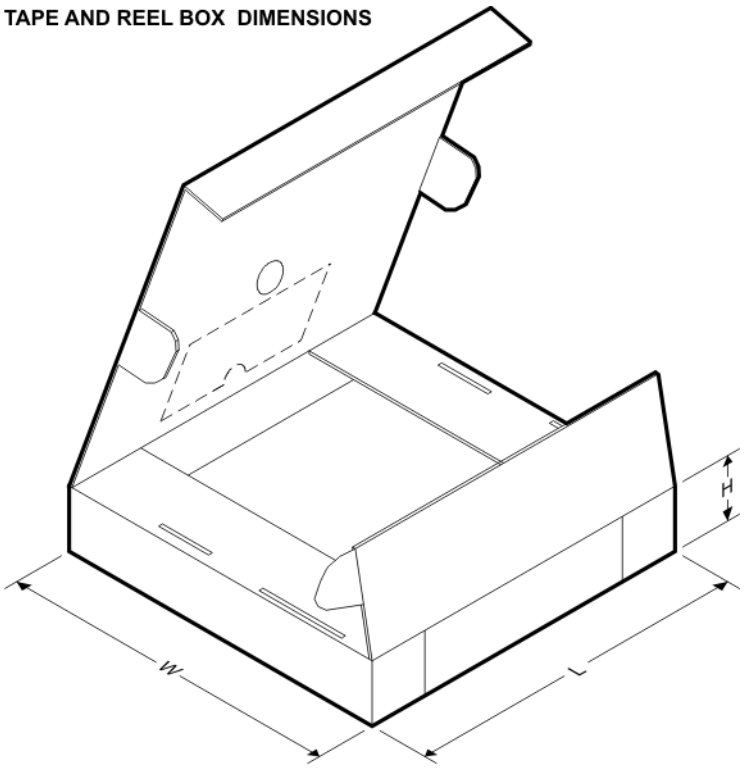

*All dimensions are nominal

Device	Package Type	Package Drawing	Pins	SPQ	Length (mm)	Width (mm)	Height (mm)
HD3SS3412ARUAR	WQFN	RUA	42	3000	367.0	367.0	45.0
HD3SS3412ARUAT	WQFN	RUA	42	250	211.0	193.0	46.0

PACKAGE OUTLINE

RUA0042A

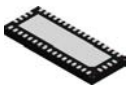

WQFN - 0.8 mm max height

PLASTIC QUAD FLATPACK - NO LEAD

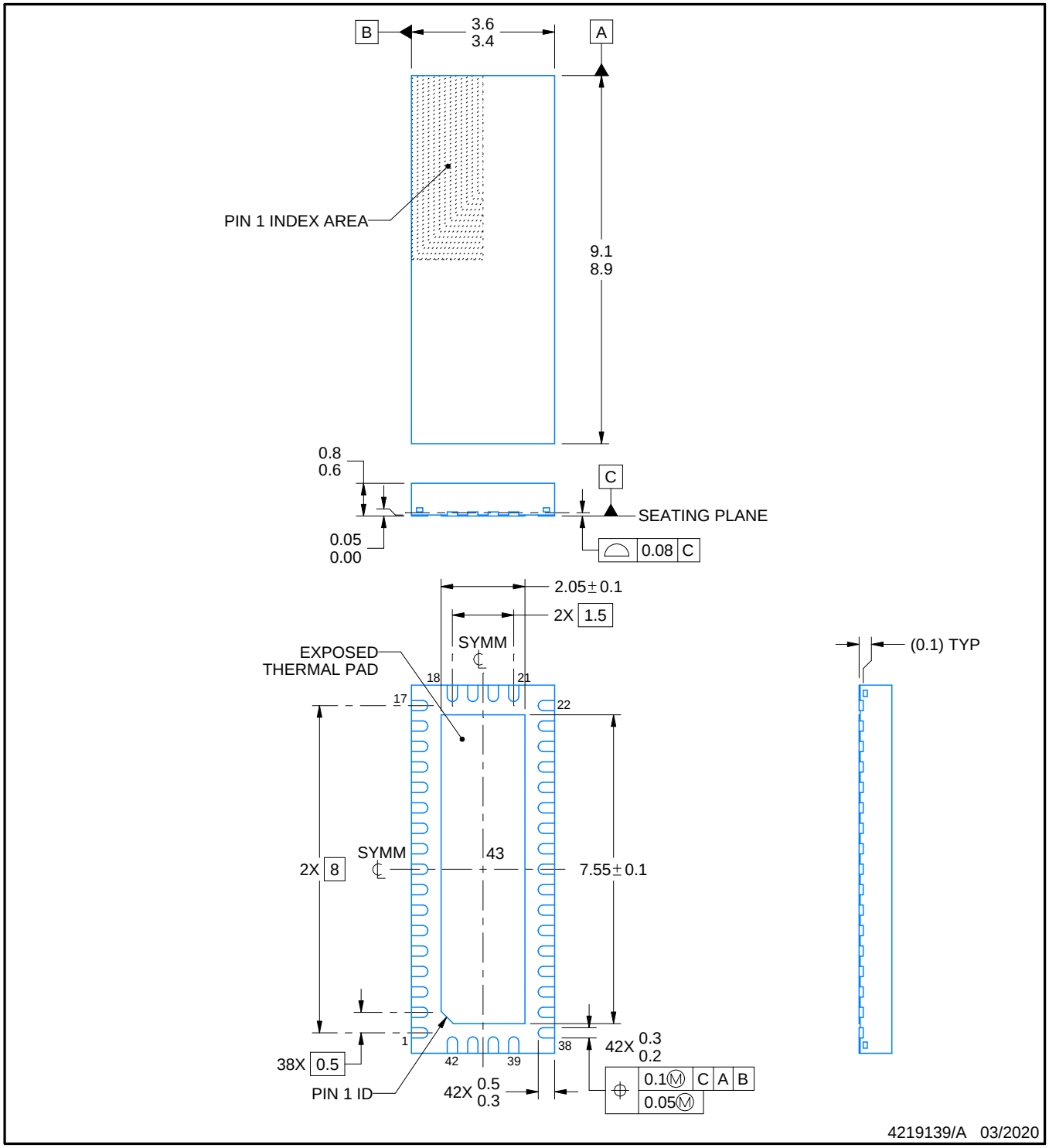

NOTES:

1. All linear dimensions are in millimeters. Any dimensions in parenthesis are for reference only. Dimensioning and tolerancing per ASME Y14.5M.
2. This drawing is subject to change without notice.
3. The package thermal pad must be soldered to the printed circuit board for thermal and mechanical performance.

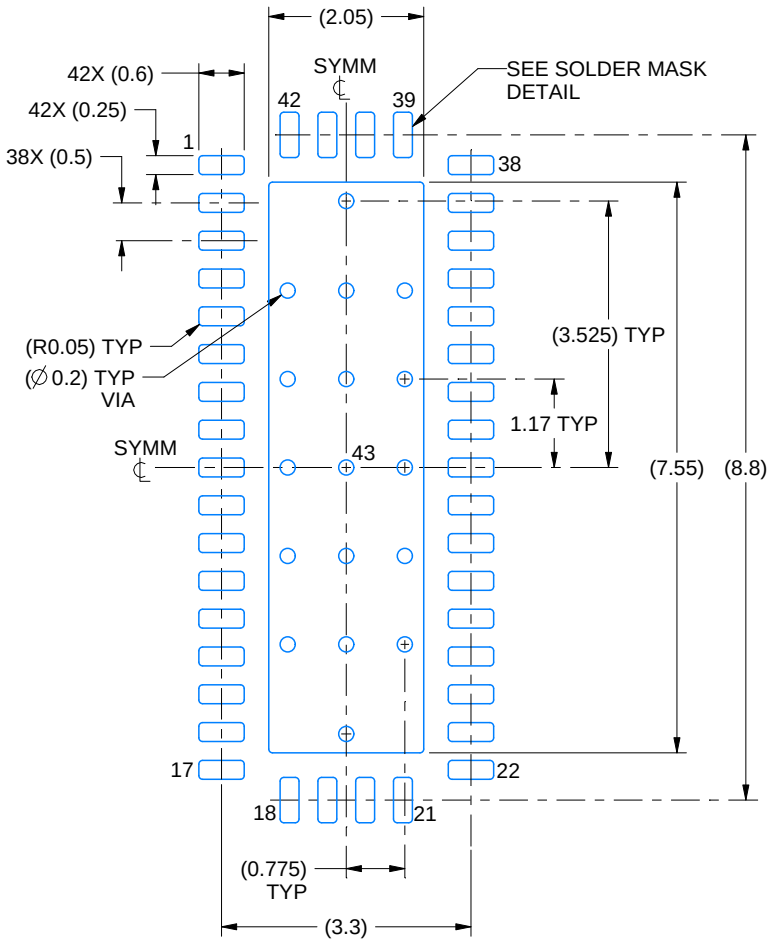

LAND PATTERN EXAMPLE
EXPOSED METAL SHOWN
SCALE: 10X

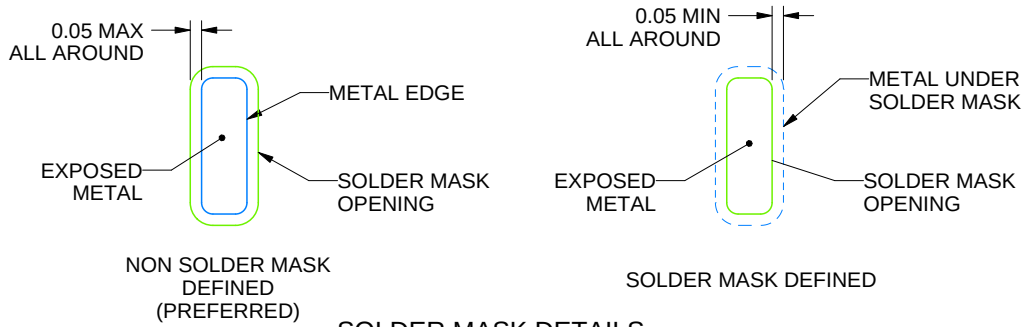

SOLDER MASK DETAILS

4219139/A 03/2020

NOTES: (continued)

4. This package is designed to be soldered to a thermal pad on the board. For more information, see Texas Instruments literature number SLUA271 (www.ti.com/lit/slua271).
5. Vias are optional depending on application, refer to device data sheet. If any vias are implemented, refer to their locations shown on this view. It is recommended that vias under paste be filled, plugged or tented.

EXAMPLE STENCIL DESIGN

RUA0042A

WQFN - 0.8 mm max height

PLASTIC QUAD FLATPACK - NO LEAD

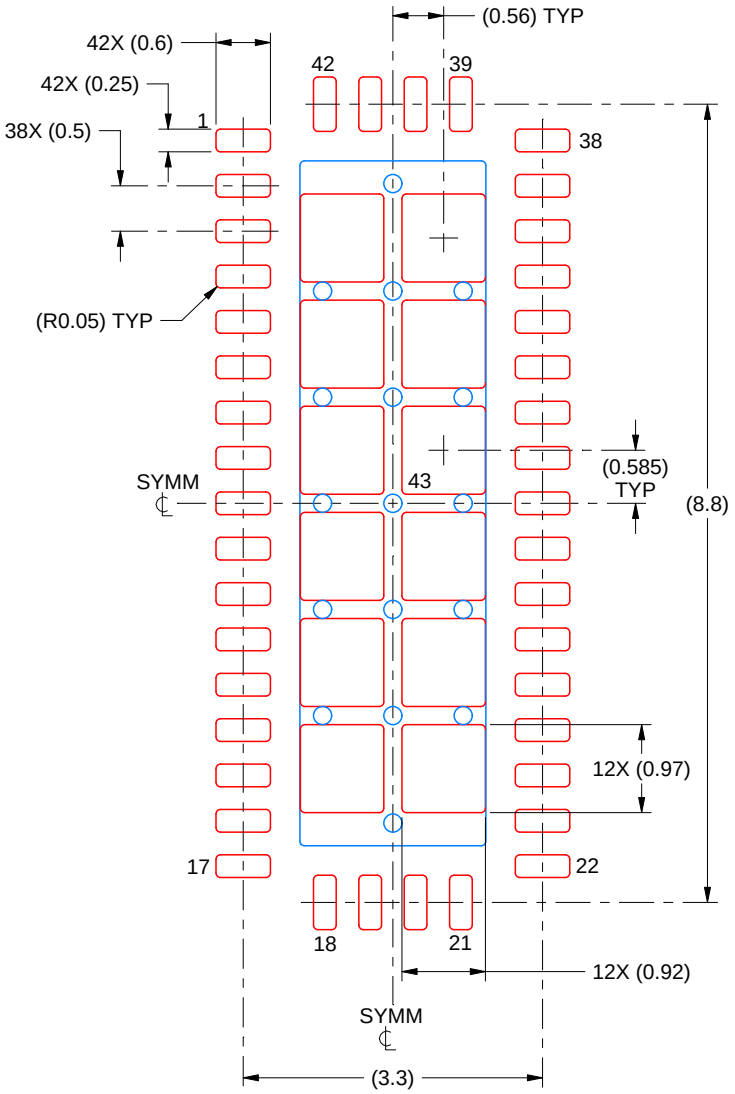

SOLDER PASTE EXAMPLE
BASED ON 0.125 MM THICK STENCIL
SCALE: 12X

EXPOSED PAD 43
69% PRINTED SOLDER COVERAGE BY AREA UNDER PACKAGE

4219139/A 03/2020

NOTES: (continued)

6. Laser cutting apertures with trapezoidal walls and rounded corners may offer better paste release. IPC-7525 may have alternate design recommendations.

RUA (R–PWQFN–N42) PLASTIC QUAD FLATPACK NO–LEAD

THERMAL INFORMATION

This package incorporates an exposed thermal pad that is designed to be attached directly to an external heatsink. The thermal pad must be soldered directly to the printed circuit board (PCB). After soldering, the PCB can be used as a heatsink. In addition, through the use of thermal vias, the thermal pad can be attached directly to the appropriate copper plane shown in the electrical schematic for the device, or alternatively, can be attached to a special heatsink structure designed into the PCB. This design optimizes the heat transfer from the integrated circuit (IC).

For information on the Quad Flatpack No–Lead (QFN) package and its advantages, refer to Application Report, QFN/SON PCB Attachment, Texas Instruments Literature No. SLUA271. This document is available at www.ti.com.

The exposed thermal pad dimensions for this package are shown in the following illustration.

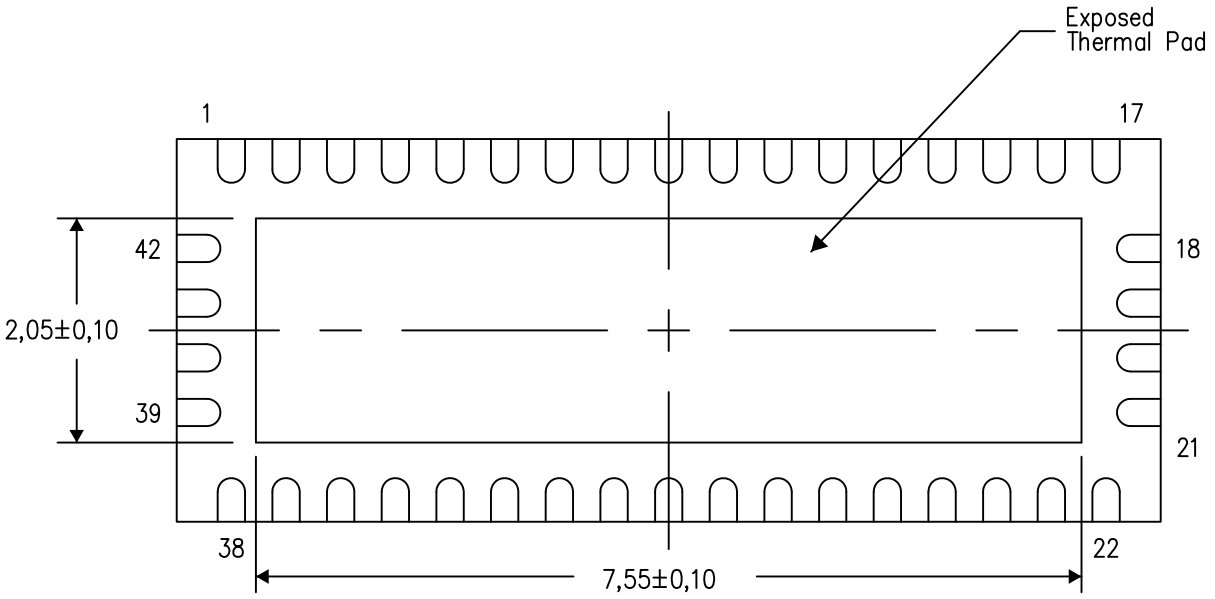

Bottom View

Exposed Thermal Pad Dimensions

4208352/E 01/13

NOTE: All linear dimensions are in millimeters

RUA (R–PWQFN–N42) PLASTIC QUAD FLATPACK NO–LEAD

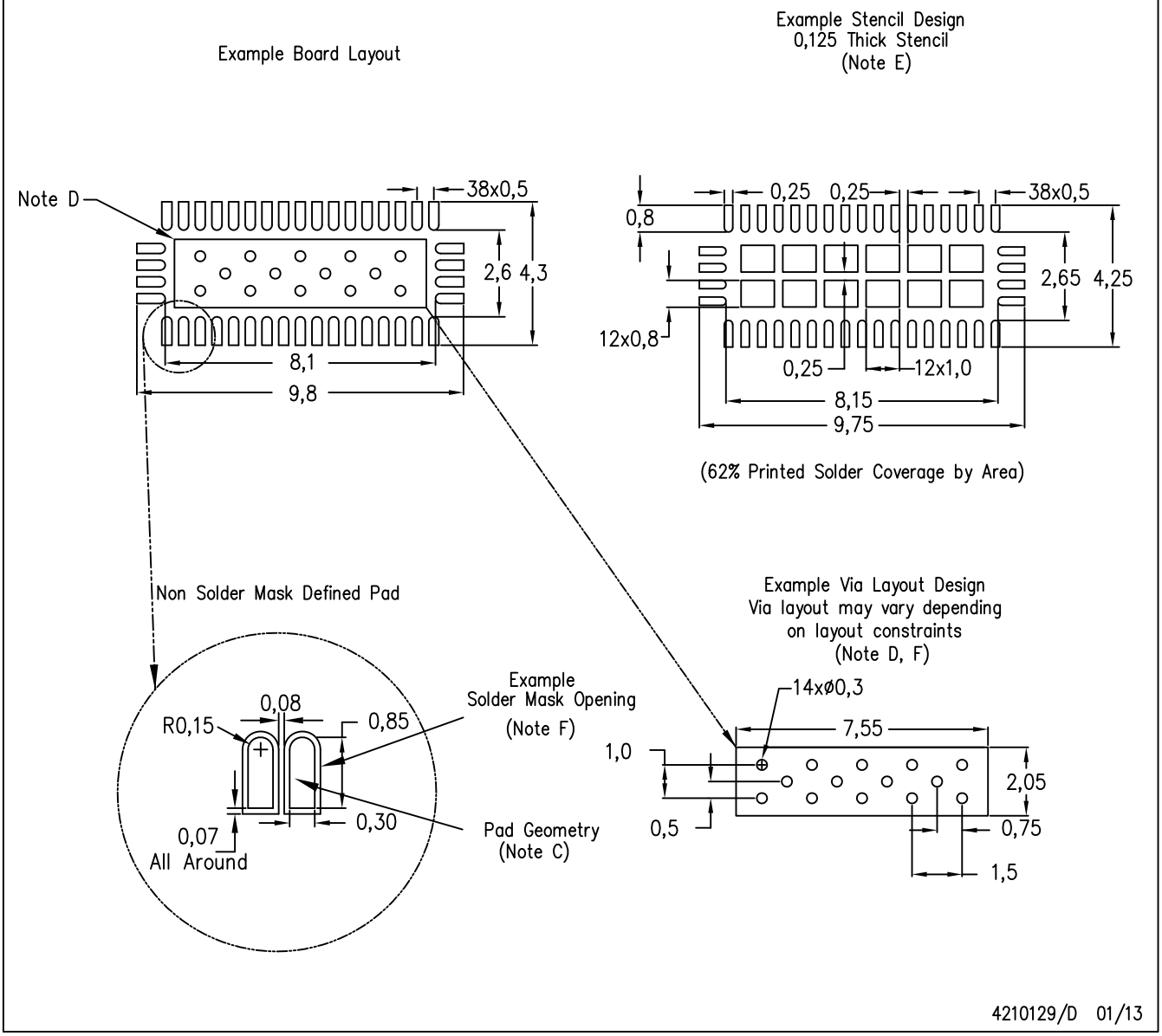

NOTES:
A. All linear dimensions are in millimeters.
B. This drawing is subject to change without notice.
C. Publication IPC–7351 is recommended for alternate designs.
D. This package is designed to be soldered to a thermal pad on the board. Refer to Application Note, Quad Flat–Pack Packages, Texas Instruments Literature No. SLUA271, and also the Product Data Sheets for specific thermal information, via requirements, and recommended board layout. These documents are available at www.ti.com <http://www.ti.com>.
E. Laser cutting apertures with trapezoidal walls and also rounding corners will offer better paste release. Customers should contact their board assembly site for stencil design recommendations. Refer to IPC 7525 for stencil design considerations.
F. Customers should contact their board fabrication site for recommended solder mask tolerances and via tenting recommendations for vias placed in the thermal pad.

IMPORTANT NOTICE AND DISCLAIMER

TI PROVIDES TECHNICAL AND RELIABILITY DATA (INCLUDING DATASHEETS), DESIGN RESOURCES (INCLUDING REFERENCE DESIGNS), APPLICATION OR OTHER DESIGN ADVICE, WEB TOOLS, SAFETY INFORMATION, AND OTHER RESOURCES “AS IS” AND WITH ALL FAULTS, AND DISCLAIMS ALL WARRANTIES, EXPRESS AND IMPLIED, INCLUDING WITHOUT LIMITATION ANY IMPLIED WARRANTIES OF MERCHANTABILITY, FITNESS FOR A PARTICULAR PURPOSE OR NON-INFRINGEMENT OF THIRD PARTY INTELLECTUAL PROPERTY RIGHTS.

These resources are intended for skilled developers designing with TI products. You are solely responsible for (1) selecting the appropriate TI products for your application, (2) designing, validating and testing your application, and (3) ensuring your application meets applicable standards, and any other safety, security, or other requirements. These resources are subject to change without notice. TI grants you permission to use these resources only for development of an application that uses the TI products described in the resource. Other reproduction and display of these resources is prohibited. No license is granted to any other TI intellectual property right or to any third party intellectual property right. TI disclaims responsibility for, and you will fully indemnify TI and its representatives against, any claims, damages, costs, losses, and liabilities arising out of your use of these resources.

TI’s products are provided subject to TI’s Terms of Sale (www.ti.com/legal/termsofsale.html) or other applicable terms available either on ti.com or provided in conjunction with such TI products. TI’s provision of these resources does not expand or otherwise alter TI’s applicable warranties or warranty disclaimers for TI products.

Mailing Address: Texas Instruments, Post Office Box 655303, Dallas, Texas 75265
Copyright © 2020, Texas Instruments Incorporated