HD3SS2522 USB Type-C SS MUX with DFP Controller

1 Features

- Compliant to USB Type-C Specification 1.1
- Mode Configuration
  - Host Only – DFP
- Channel Configuration (CC)
  - Attach of USB Port Detection
  - Cable Orientation Detection
  - Type-C Current Mode (Default, Mid, High)
- Supply Voltage 3.3 V ± 10%
- 2:1 Mux Solution for USB 3.1 Signaling
- Operates up to 10 Gbps with Wide -3 dB BW of 8 GHz
- Excellent Dynamic Characteristics at 2.5 GHz
  - Crosstalk = –39 dB
  - Off Isolation = –22 dB
  - Insertion Loss = –1.2 dB
  - Input Return Loss = –12 dB
- Low Active (2 mW) and Standby Power (50 µW) Consumption

2 Applications

- Desktop and Notebook PCs
- USB Type-C DFP Applications
- Motherboards

3 Description

HD3SS2522 is a 2:1 USB mux with Configuration Channel (CC) logic with Downstream Facing Port (DFP) support. The HD3SS2522 presents itself as a DFP according to the USB Type-C Spec. The CC logic block monitors the CC1 and CC2 pins voltages to determine when a USB port has been attached. Once a USB port has been attached, the CC logic also determines the orientation of the cable and configures the USB SS mux accordingly.

The HD3SS2522 provides an VBUS_EN signal to control legacy power switch to provide 5 V to VBUS. The device also provides control signals needed to support 5 V VCONN sourcing for ecosystems implementing USB Type-C.

Excellent dynamic characteristics of the device allow high speed switching with minimum attenuation to the signal eye diagram and little added jitter. The device also has low current consumption in Standby mode.

Device Information[1]

PART NUMBER	PACKAGE	BODY SIZE (NOM)
HD3SS2522	WQFN (56)	11.00 mm x 5.00 mm

(1) For all available packages, see the orderable addendum at the end of the data sheet.

Simplified Schematic

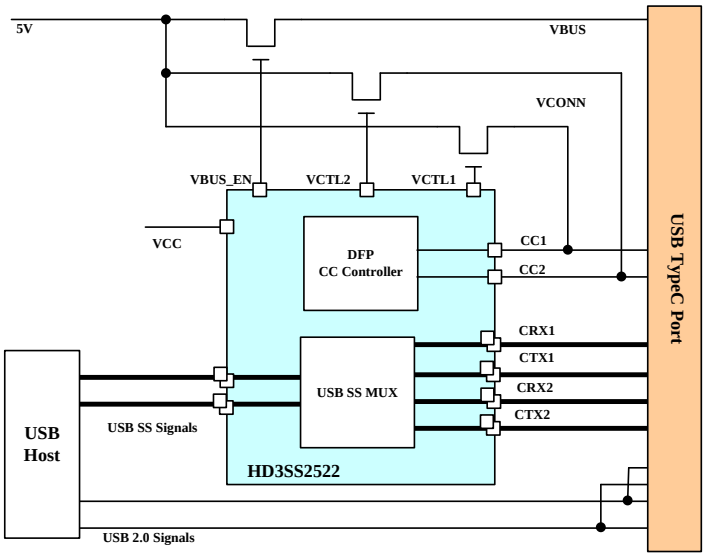

An IMPORTANT NOTICE at the end of this data sheet addresses availability, warranty, changes, use in safety-critical applications, intellectual property matters and other important disclaimers. PRODUCTION DATA.

Table of Contents

1 Features ... 1
2 Applications ... 1
3 Description ... 1
4 Revision History ... 2
5 Pin Configuration and Functions ... 3
6 Specifications ... 5
6.1 Absolute Maximum Ratings ... 5
6.2 ESD Ratings ... 5
6.3 Recommended Operating Conditions ... 5
6.4 Thermal Information ... 5
6.5 Electrical Characteristics ... 6
6.6 Timing Requirements ... 7
6.7 Switching Characteristics ... 9
7 Detailed Description ... 10
7.1 Overview ... 10
7.2 Functional Block Diagram ... 10
7.3 Feature Description ... 11
7.4 Device Functional Modes ... 11
8 Application and Implementation ... 12
8.1 Application Information ... 12
8.2 USB Type-C DFP Typical Application ... 12
9 Power Supply Recommendations ... 15
10 Layout ... 15
10.1 Layout Guidelines ... 15
10.2 Layout Example ... 16
11 Device and Documentation Support ... 17
11.1 Community Resources ... 17
11.2 Trademarks ... 17
11.3 Electrostatic Discharge Caution ... 17
11.4 Glossary ... 17
12 Mechanical, Packaging, and Orderable Information ... 17

4 Revision History

Changes from Revision A (July 2015) to Revision B **Page**

- Changed *Features* From: Compliant to USB Type-C Specification 1.0 To: Compliant to USB Type-C Specification 1.1 ... 1

Changes from Original (April 2015) to Revision A **Page**

- Changed the Description of VBUS_EN in the *Pin Functions* table. ... 4
- Changed the Description of VCTRL1 and VCTRL2 in the *Pin Functions* table. ... 4

Copyright © 2015, Texas Instruments Incorporated

5 Pin Configuration and Functions

RHU Package
Top View

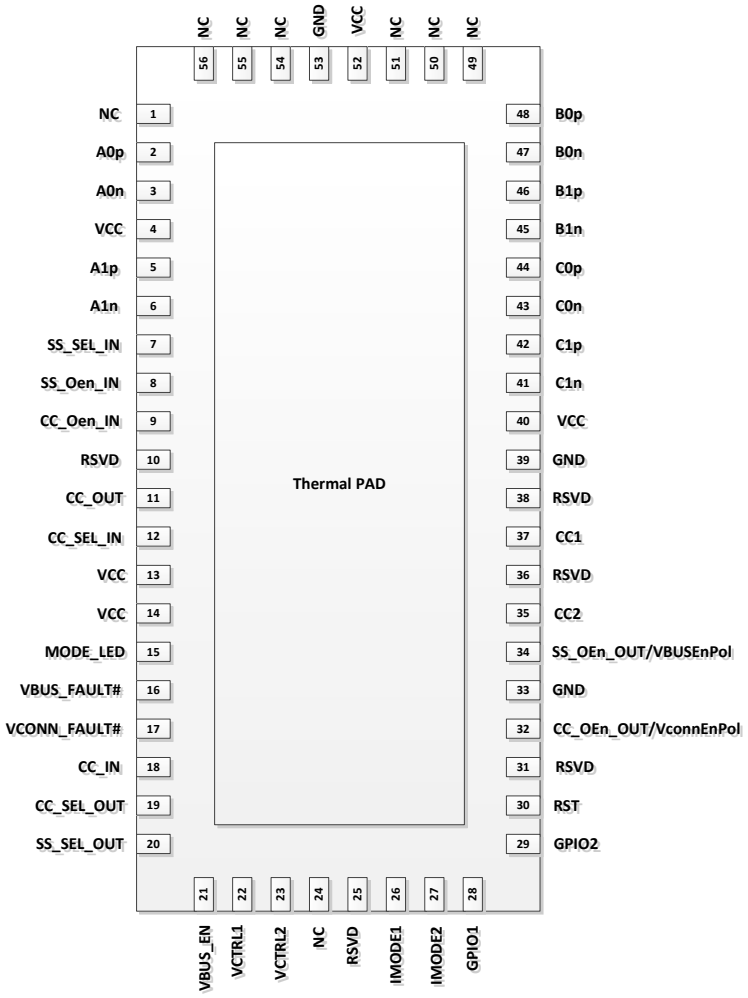

Pin Functions

PIN		I/O	DESCRIPTION
NAME	NO.		
A0p	2	I/O	Port A0, High Speed Positive Signal
A0n	3	I/O	Port A0, High Speed Negative Signal
A1p	5	I/O	Port A1, High Speed Positive Signal
A1n	6	I/O	Port A1, High Speed Negative Signal
B0p	48	I/O	Port B0, High Speed Positive Signal
B0n	47	I/O	Port B0, High Speed Negative Signal
B1p	46	I/O	Port B1, High Speed Positive Signal
B1n	45	I/O	Port B1, High Speed Negative Signal
C0p	44	I/O	Port C0, High Speed Positive Signal
C0n	43	I/O	Port C0, High Speed Negative Signal
C1p	42	I/O	Port C1, High Speed Positive Signal
C1n	41	I/O	Port C1, High Speed Negative Signal
CC_IN	18	I/O	Selected CC signal back to the device as input - connect to CC_OUT pin

Copyright © 2015, Texas Instruments Incorporated

Pin Functions (continued)

PIN		I/O	DESCRIPTION		
NAME	NO.				
CC_OUT	11	I/O	Selected CC signal as output - connect to CC_IN pin		
CC_SEL_IN	12	I	CC Signal select pin input – Connect to CC_SEL_OUT		
CC_SEL_OUT	19	O	CC Signal select pin output – Connect to CC_SEL_IN		
CC_OEn_IN	9	I	Active Low CC MUX Enable input – connect to CC_OEn_OUT		
CC_OEn_OUT / VconnEnPol	32	I/O	Active Low CC MUX Enable output – connect to CC_OEn. The pin is also sampled upon reset to set the polarity of the VCTRL1 and VCTRL2. 0 = VCTRL1/2 polarity is active high. 1 = VCTRL1/2 polarity is active low.		
CC1	37	I/O	USB Type-C configuration channel for position 1		
CC2	35	I/O	USB Type-C configuration channel for position 2		
GND	33 , 39, 53	G	Ground		
GPIO1	28	I/O	GPIO or SCL for FW update		
GPIO2	29	I/O	GPIO or SDA for FW update		
IMODE1 IMODE2	26 27	I	IMODE1	IMODE2	Current Mode
			Low	Low	Default
			Low	High	Mid (1.5 A)
			High	Low	Reserved
			High	High	High (3A)
MODE_LED	15	O	High when UFP attach detected		
NC	1, 24, 49, 50, 51, 54, 55, 56		Not connected		
RST	30	I	CC Controller Reset		
RSVD	10, 25, 31, 36, 38	I/O	Reserved		
SS_OEn_IN	8	I	Active Low SS MUX Enable input – connect to SS_OEn_OUT		
SS_OEn_OUT / VBUSEnPol	34	I/O	Active Low SS MUX Enable output – connect to SS_OEn_IN. The pin is also sampled upon reset to set the polarity of the VBUS_EN. 0 = VBUS_EN polarity is active high. 1 = VBUS_EN polarity is active low.		
SS_SEL_IN	7	I	SS Port select pin input – Connect to SS_SEL_OUT		
SS_SEL_OUT	20	O	SS Port select pin output – Connect to SS_SEL_IN		
VBUS_EN	21	O	Polarity programmable via VBUSEnPol pin (pin 34). Driven low or high when UFP attach is detected.		
VBUS_FAULT#	16	I	VBUS Fault signal in from VBUS Power switch. Active low.		
VCC	4 , 13, 14, 40, 52	P	3.3V Power		
VCONN_FAULT#	17	I	VCONN Fault signal in from VCONN switches. Active low.		
VCTRL1	22	O	Polarity programmable via VconnEnPol pin (pin 32). Driven low or high when active cable is detected.		
VCTRL2	23	O	Polarity programmable via VconnEnPol pin (pin 32). Driven low or high when active cable is detected.		

Copyright © 2015, Texas Instruments Incorporated

6 Specifications

6.1 Absolute Maximum Ratings

over operating free-air temperature range (unless otherwise noted) (1)

		MIN	MAX	UNIT
Power supply voltage range, V_{CC}		–0.4	4	V
Voltage Range	Differential I/O (High bandwidth signal path, AxP/N, BxP/N, CxP/N)	–0.4	2.4	
	Control Pins and Single Ended I/Os including CC1 and CC2	–0.4	V_{CC} + 0.4	

(1) Stresses beyond those listed under *Absolute Maximum Ratings* may cause permanent damage to the device. These are stress ratings only, which do not imply functional operation of the device at these or any other conditions beyond those indicated under *Recommended Operating Conditions*. Exposure to absolute-maximum-rated conditions for extended periods may affect device reliability.

6.2 ESD Ratings

			VALUE	UNIT
$V_{(ESD)}$	Electrostatic discharge	Human-body model (HBM), per ANSI/ESDA/JEDEC JS-001 (1)	±2000	V
		Charged-device model (CDM), per JEDEC specification JESD22-C101 (2)	±500	

(1) JEDEC document JEP155 states that 500-V HBM allows safe manufacturing with a standard ESD control process.
(2) JEDEC document JEP157 states that 250-V CDM allows safe manufacturing with a standard ESD control process.

6.3 Recommended Operating Conditions

over operating free-air temperature range (unless otherwise noted)

			MIN	NOM	MAX	UNIT
V_{CC}	Supply voltage		3	3.3	3.6	V
V_{IH}	Input high voltage	Control/Status pins	2		V_{CC}	V
V_{IL}	Input low voltage	Control/Status pins	–0.1		0.8	V
$V_{I/O(Diff)}$	Differential voltage	Switch I/O diff voltage	0		1.6	V_{PP}
$V_{I/O(CM)}$	Common voltage	Switch I/O common mode voltage	0		2	V
$V_{I/O}$	Input / output voltage	CC_OUT, CC_IN, and selected CC pin for configuration	0		V_{CC}	V
V_{IN}	Input voltage	Selected CC pin for VCONN	0		5.5	V
T_A	Operating free-air temperature	HD3SS2522RHU	0		70	°C

6.4 Thermal Information

THERMAL METRIC (1)		HD3SS2521A RHU 56 PINS	UNIT
$R_{\theta JA}$	Junction-to-ambient thermal resistance	31.6	°C/W
$R_{\theta JC(top)}$	Junction-to-case (top) thermal resistance	15.9	
$R_{\theta JB}$	Junction-to-board thermal resistance	8.5	
ψ_{JT}	Junction-to-top characterization parameter	0.5	
ψ_{JB}	Junction-to-board characterization parameter	8.5	
$R_{\theta JC(bot)}$	Junction-to-case (bottom) thermal resistance	N/A	

(1) For more information about traditional and new thermal metrics, see the *IC Package Thermal Metrics* application report, SPRA953.

Copyright © 2015, Texas Instruments Incorporated

6.5 Electrical Characteristics

over operating free-air temperature range (unless otherwise noted)

PARAMETER		TEST CONDITIONS	MIN	TYP	MAX	UNIT
I_{CC}	Supply current	V_{CC} = 3.6 V, SS_OEn, CC_OEn = GND		0.6	1	mA
$I_{(STANDBY)}$	Standby current	V_{CC} = 3.3 V, SS_OEN, CC_OEn = V_{CC}		15		µA
VBUS_FAULT#, VCONN_FAULT#, IMODE1, IMODE2, RST, RSVD, GPIO1, GPIO2						
V_{IT+}	Positive-going input threshold voltage		0.45 x V_{CC}		0.75 x V_{CC}	V
V_{IT-}	Negative-going input threshold voltage		0.25 x V_{CC}		0.55 x V_{CC}	V
V_{hys}	nput voltage hysteresis (V_{IT+} – $V_{IT–}$)	V_{CC} = 3 V	0.3		1	V
R_{PULL}	Pullup/pulldown resistor	Pullup: V_{IN} = GND, Pulldown: V_{IN} = V_CC, V_{CC} = 3 V	20	35	50	kΩ
C_I	Input capacitance	V_{IN} = GND or V_{CC}		5		pF
I_{LGK}	High-impedance leakage current	V_{IN} = GND or V_{CC}, V_{CC} = 3 V, Pullup/Pulldown disabled			±50	nA
VCTRL1, VCTRL2, VBUS_EN						
V_{OL}	Low-level output voltage	$I_{OL(max)}$ = 6 mA (1)		GND + 0.3		V
MODE_LED						
V_{OH}	High-level output voltage	$I_{OH(max)}$ = –6 mA (1)		V_{CC} – 0.3		V
V_{OL}	Low-level output voltage	$I_{OL(max)}$ = 6 mA (1)		GND + 0.3		V
AxP/N, BxP/N, CxP/N						
I_{LGK}	High-impedance leakage current	V_{CC} = 3.6 V, V_{IN} = 0 V, V_{OUT} = 2 V (I_{LKG} on open outputs Port B and C)			130	µA
		V_{CC} = 3.6 V, V_{IN} = 0 V, V_{OUT} = 2 V (I_{LKG} on open outputs Port A)			4	µA
CC1, CC2						
I_{LGK}	High-impedance leakage current	V_{CC} = 3.6 V, V_{IN} = 0 V, V_{OUT} = 0 V to 4 V			1	µA

(1) The maximum total current, $I_{OH(max)}$ and $I_{OL(max)}$, for all outputs combined should not exceed ±48 mA to hold the maximum voltage drop specified.

Copyright © 2015, Texas Instruments Incorporated

6.6 Timing Requirements

			MIN	NOM	MAX	UNIT
AxP/N, BxP/N, CxP/N HIGH-BANDWIDTH SIGNAL PATH						
t_{PD}	Switch Propagation Delay	R_{SC} and R_L = 50 Ω			85	ps
t_{ON}	SS_SEL_IN -to-Switch t_{ON}	R_{SC} and R_L = 50 Ω		70	250	ns
t_{OFF}	SS_SEL_IN -to-Switch t_{OFF}			70	250	ns

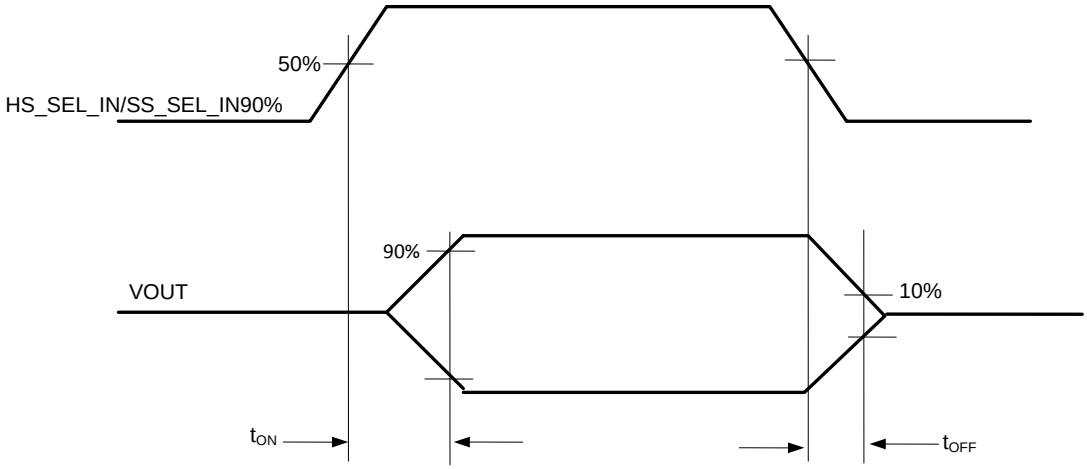

Figure 1. Select to Switch t_{ON} and t_{OFF}

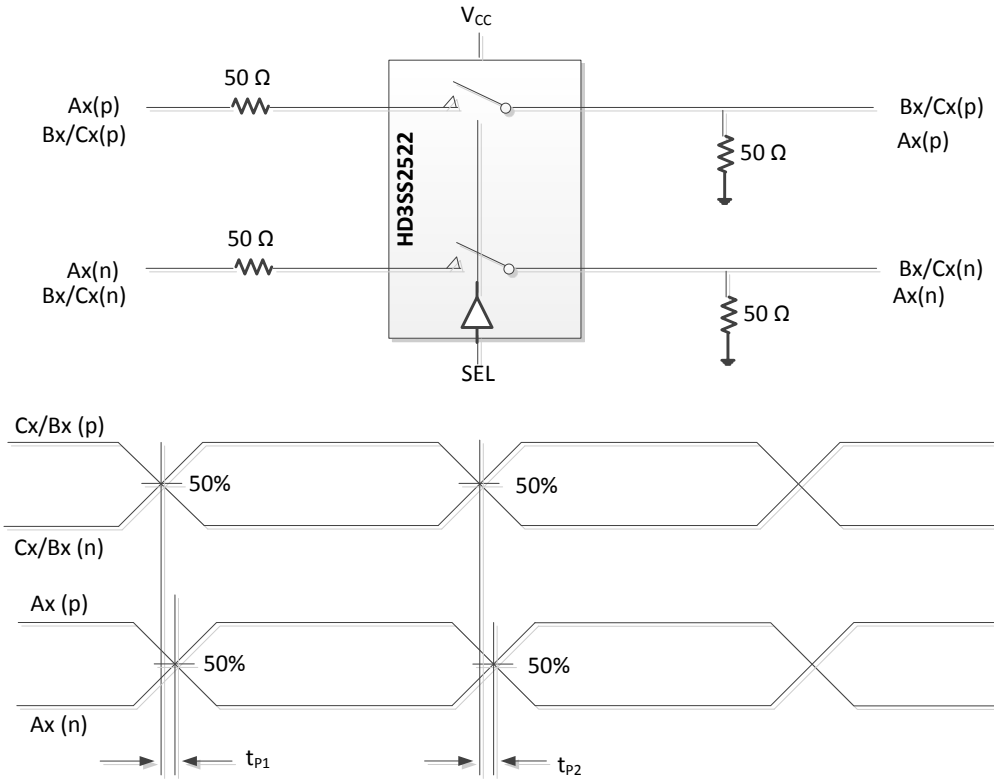

Inter-pair skew

t_{PD} = Max(t_{p1}, t_{p2})

$t_{SK(O)}$ = Difference between t_{PD} for any two pairs of outputs

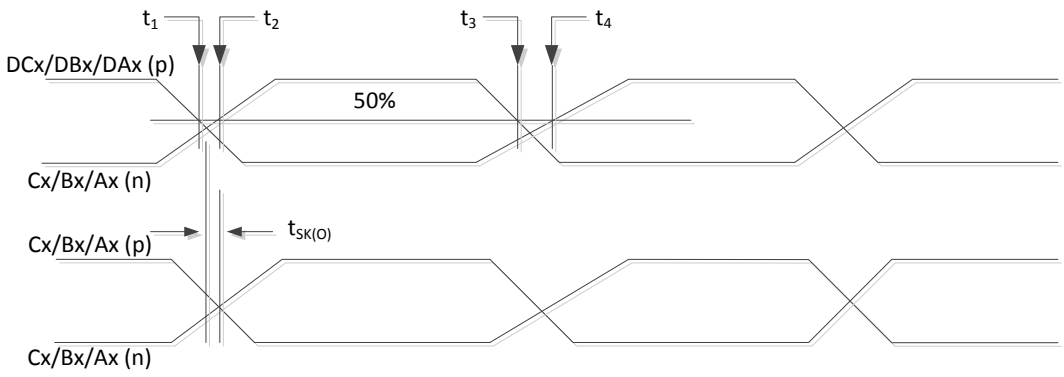

Intra-pair skew

$t_{SK(b\text{-}b)} = 0.5 \times |(t_4 - t_3) + (t_1 - t_2)|$

(1) Measurements based on an ideal input with zero intra-pair skew on the input, i.e. the input at A to B/C or the input at B/C to A

(2) Inter-pair skew is measured from lane to lane on the same channel, e.g. C0 to C1

(3) Intra-pair skew is defined as the relative difference from the p and n signals of a single lane

Figure 2. Propagation Delay and Skew

Copyright © 2015, Texas Instruments Incorporated

6.7 Switching Characteristics

over operating free-air temperature range (unless otherwise noted)

PARAMETER		TEST CONDITIONS	MIN	TYP	MAX	UNIT
AxP/N, BxP/N, CxP/N						
$t_{SK(O)}$	Inter-pair output skew (channel-channel)	R_{SC} and R_L = 50 Ω			20	ps
$t_{SK(b-b)}$	Inter-pair output skew (bit-bit)				8	ps
C_{ON}	Outputs ON capacitance	V_{IN} = 0 V, outputs open, switch ON		1.5		pF
C_{OFF}	Outputs OFF capacitance	V_{IN} = 0 V, outputs open, switch OFF		1		pF
R_{ON}	Output ON resistance	V_{CC} = 3.3 V, V_{CM} = 0.5 V – 1.5 V, I_O = –8 mA		5	8	Ω
ΔR_{ON}	On resistance match between channels	V_{CC} = 3.3 V; –0.35 V ≤ V_{IN} ≤ 1.2 V; I_O = –8 mA			2	Ω
	On resistance match between pairs of the same channel				0.7	
$R_{(FLAT_ON)}$	On resistance flatness [$R_{ON(MAX)}$ – $R_{ON(MIN)}$]	V_{CC} = 3.3 V; –0.35 V ≤ V_{IN} ≤ 1.2 V			1.15	Ω
R_L	Differential input return loss (V_{CM} = 0 V)	f = 2.5 GHz		–12		dB
		f = 4 GHz		–11		
X_{TALK}	Differential crosstalk (V_{CM} = 0 V)	f = 2.5 GHz		–39		dB
		f = 4 GHz		–35		
O_{IRR}	Differential off-isolation (V_{CM} = 0 V)	f = 2.5 GHz		–22		dB
		f = 4 GHz		–19		
I_L	Differential insertion loss (V_{CM} = 0 V)	f = 2.5 GHz		–1.1		dB
		f = 4 GHz		–1.5		
BW	Bandwidth	At 3 dB		6		GHz

Copyright © 2015, Texas Instruments Incorporated

7 Detailed Description

7.1 Overview

HD3SS2522 is a 10-Gbps USB mux with Configuration Channel (CC) logic with DFP support. The HD3SS2522 presents itself as a DFP according to the USB Type-C Spec. The CC logic block monitors the CC1 and CC2 pin voltages to determine when a USB port has been attached. Once a USB port has been attached, the CC logic also determines the orientation of the cable and configures the USB SS mux accordingly.

The device provides an VBUS_EN signal to control legacy power switch to provide 5 V to VBUS. The device also provides IOs needed to support 5 V VCONN sourcing for ecosystems implementing USB Type-C.

Excellent dynamic characteristics of the device allow high speed switching with minimum attenuation to the signal eye diagram and little added jitter. The device also has low current consumption in Standby mode.

7.2 Functional Block Diagram

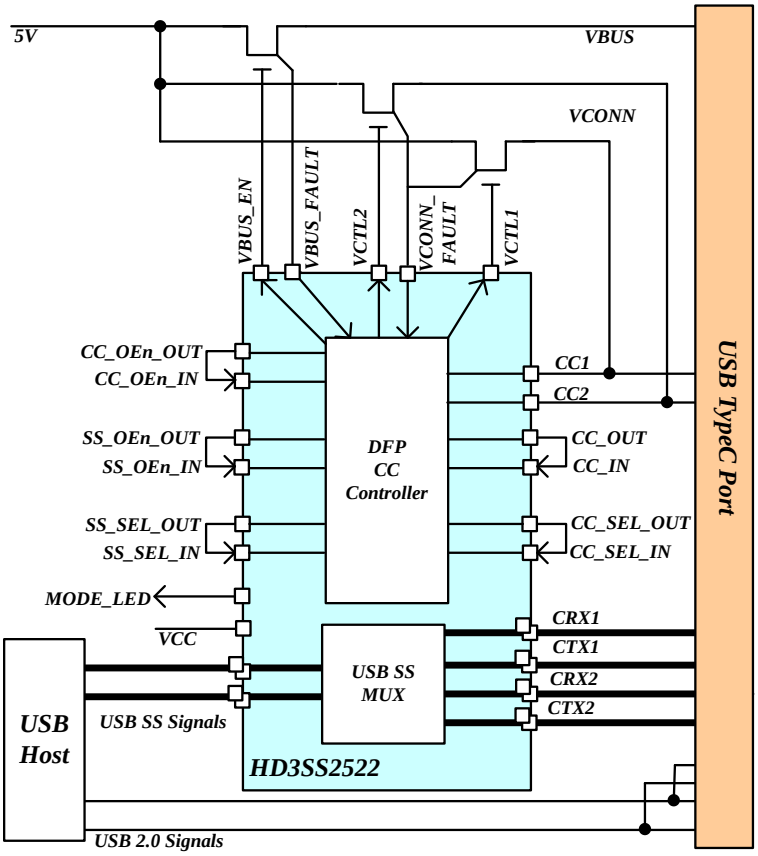

Copyright © 2015, Texas Instruments Incorporated

7.3 Feature Description

7.3.1 Adaptive Common Mode Tracking for USB 3.1 MUX

The device provides an integrated USB 3.1 2:1 passive MUX. The MUX provides adaptive common mode tracking allowing RX and TX channels to have different common mode voltage. This feature allows simpler system implementation.

7.3.2 DFP-to-UFP Attach/Detach Detection

The HD3SS2522 monitors the CC lines as a Type-C DFP port. When the device senses that one of the CC has a resistance to GND, it detects that an UFP is attached. The device provides an emulated ID signal (VBUS_EN) in the event of a UFP attach.

The device also monitors specified pull down resistor according to Type-C specifications to determine if an active cable is attached. In the event of active cable detection, HD3SS2522 provides necessary control signals for VCONN switches that provide 5-V VCONN power to appropriate CC pin.

7.3.3 Plug Orientation/Cable Twist Detection

According to USB Type-C specifications plug can be inserted into a receptacle in either one of two orientations. HD3SS2522 monitors for a pull-down resistors from an attached UFP port determining the MUX orientation.

7.3.4 VBUS Fault

HD3SS2522 does not take any action in case of a VBUS fault. VBUS fault needs to be handled by legacy power management implementations.

7.3.5 VCONN Fault

If a VCONN fault is determined by the external power switch and fed into the device through VCONN_FAULT pin, HD3SS2522 will latch it off until the cable is unplugged if there is a fault that does not clear within 5 ms. Which is a sufficient amount of time to charge the 10-µF inrush capacitance.

7.4 Device Functional Modes

7.4.1 Unattached.DFP State

In this state, the HD3SS2522 as a DFP port is waiting to detect the presence of a UFP. The device injects pull-up currents to both of the CC lines.

7.4.2 Attached.DFP State

When HD3SS2522 is in the Attached.DFP state, the port is attached and operating as a DFP. The device continues to monitor the CC pins to make sure the appropriate pin is within vRd range specified by Type-C specification. The device source current on one of the this CC pins and monitor its voltage. The port advertises one of the three levels of VBUS power capability as specified in Type-C spec according to GPIO pins IMODE1 and IMODE2.

The device controls the VCONN power switches to apply VCONN to the unused CC pin if the voltage on the unused CC pin is within the vRa range as specified in Type-C specification.

Copyright © 2015, Texas Instruments Incorporated

8 Application and Implementation

NOTE

Information in the following applications sections is not part of the TI component specification, and TI does not warrant its accuracy or completeness. TI's customers are responsible for determining suitability of components for their purposes. Customers should validate and test their design implementation to confirm system functionality.

8.1 Application Information

The HD3SS2522 is a high speed switch with integrated DFP CC controller. The HD3SS2522 can be implemented in any USB Type-C DFP applications in conjunction with VBUS and VCONN switches.

8.2 USB Type-C DFP Typical Application

This section depicts the typical Type-C system with a USB Host or Hub. The Type C receptacle in this system is a DFP only providing VBUS and VCONN upon the connection of UFP device. The HD3SS2522 DFP CC controller determines the UFP attachment and provides VBUS and VCONN based upon the Type-C specification state diagram and timing definition.

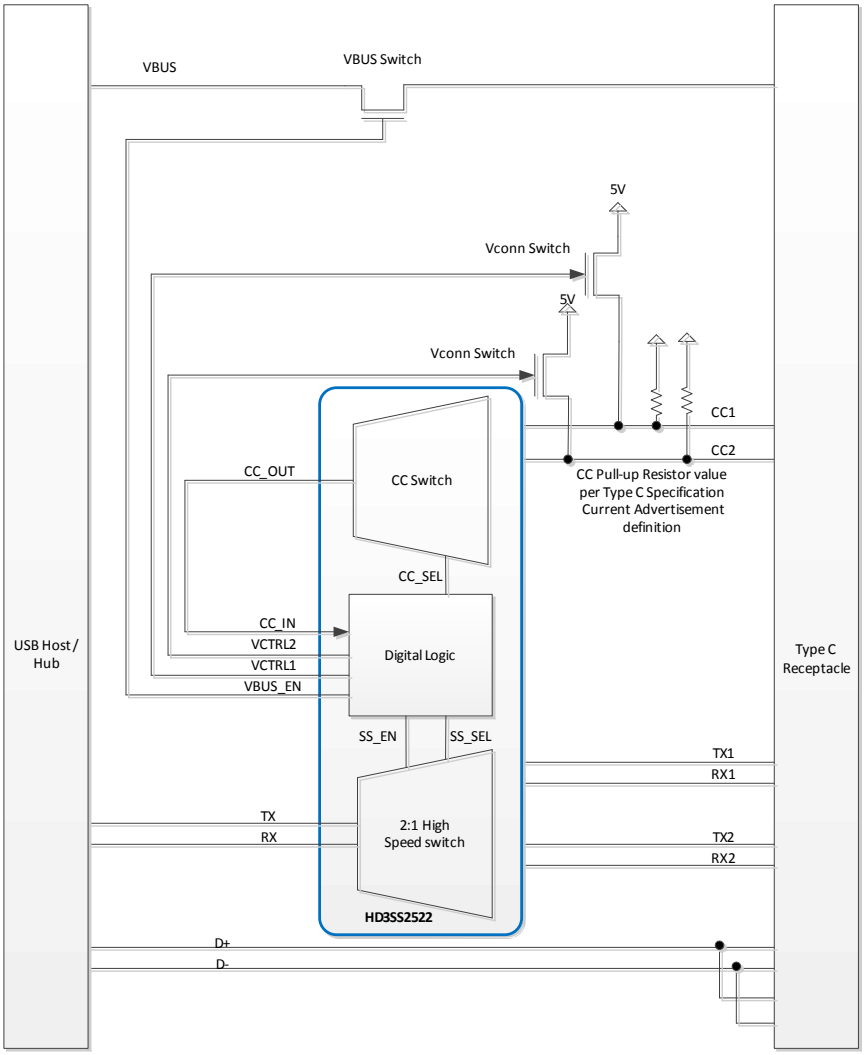

This Figure represents high level block diagram of the Type C DFP implementation not a circuit level implementation.

Figure 3. USB Type-C DFP

Copyright © 2015, Texas Instruments Incorporated

USB Type-C DFP Typical Application (continued)

8.2.1 Design Requirements

For this design example, use the parameters shown in Table 1.

Table 1. Design Parameters

PARAMETER	VALUE
V_{CC}	3.3 V
AxP/N, BxP/N, CxP/N V_{CM} Voltage	0 V – 2 V
CC_IN, CC_OUT, CC1, CC2	0 V –3.3 V
Control Pin Vmax for Low	0.8 V
Control Pin Vmax for High	2 V

8.2.2 Detailed Design Procedure

8.2.2.1 USB Type-C Current Advertising

HD3SS2522 can be used to advertise USB Type-C current in conjunction with pull up resistors to CC1 and CC2 pins. These pull up resistors must meet the Type C spec requirements. The IMODE1 and IMODE2 setting must match the CC resistor configuration for the current mode: default, mid or high.

8.2.2.2 VCONN and VBUS Power Switch Control

VCTRL1# and VCTRL2# are outputs from the HD3SS2522 CC controller to enable or disable the VCONN switch based upon the orientation detection, audio accessory termination Ra detection, and/or fault condition.

VBUS_EN is an output from the HD3SS2522 CC controller to enable VBUS switch. Upon detection of UFP attachment, the VBUS_EN is asserted to enable VBUS switch.

8.2.2.3 Firmware Upgradability

If necessary, the CC controller firmware (FW) can be updated via GPIO1, GPIO2 and SYS_COM_REQ. Contact Texas Instruments for further assistance with upgrading the FW.

8.2.3 USB Type-C DFP Circuit Schematics with a Type C Receptacle

The schematics below depicts the circuit level implementation of the Type C system with HD3SS2522 and a DFP only Type C connector. The system should select a power switch that complies with the Type C specification and application requirements. The power switch can be controlled by the HD3SS2522. See the *Detailed Design Procedure* section of the datasheet for design details.

Copyright © 2015, Texas Instruments Incorporated

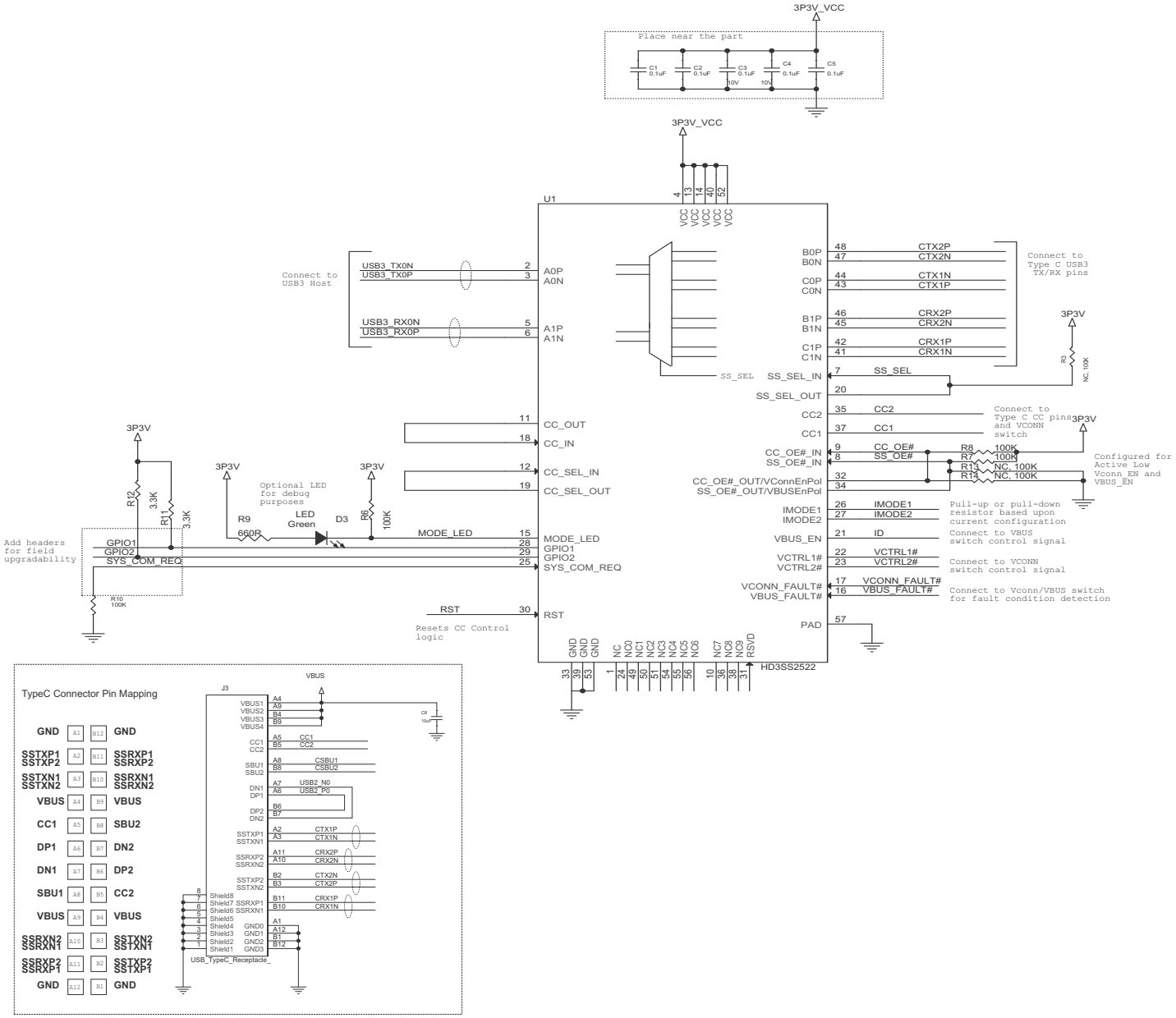

Figure 4. Example Schematics With a Type-C Receptacle

Copyright © 2015, Texas Instruments Incorporated

9 Power Supply Recommendations

The HD3SS2522 does not have any special requirement for power supply as long as it is within the recommended range. The device also does not have any special reset requirement.

10 Layout

10.1 Layout Guidelines

10.1.1 Critical Routes

The high speed differential signals must be routed with great care to minimize signal quality degradation between the connector and the source or sink of the high speed signals by following the guidelines provided in this document. Depending on the configuration schemes, the speed of each differential pair can reach a maximum speed of 10 Gbps. These signals are to be routed first before other signals with highest priority.

- Each differential pair should be routed together with controlled differential impedance of 85 to 90-Ω and 50-Ω common mode impedance. Keep away from other high speed signals. The number of vias should be kept to minimum. Each pair should be separated from adjacent pairs by at least 3 times the signal trace width. Route all differential pairs on the same group of layers (Outer layers or inner layers) if not on the same layer. No 90 degree turns on any of the differential pairs. If bends are used on high speed differential pairs, the angle of the bend should be greater than 135 degrees.
- Length matching:
  - Keep high speed differential pairs lengths within 5 mil of each other to keep the intra-pair skew minimum. The inter-pair matching of the differential pairs is not as critical as intra-pair matching. The SSTX and SSRX pairs do not have to match while they need to be routed as short as possible.
- Keep high speed differential pair traces adjacent to ground plane.
- Do not route differential pairs over any plane split.
- ESD components on the high speed differential lanes should be placed nearest to the connector in a pass through manner without stubs on the differential path.
- For ease of routing, the P and N connection of the USB3.1 differential pairs to the HD3SS2522 pins can be swapped.

10.1.2 General Routing/Placement Rules

- Route all high-speed signals first on un-routed PCB. The stub on USB2 D+ and D- pairs should not exceed 3.5 mm.
- Follow 20H rule (H is the distance to ref-plane) for separation of the high speed trace from the edge of the plane
- Minimize parallelism of high speed clocks and other periodic signal traces to high speed lines
- All differential pairs should be routed on the top or bottom layer (microstrip traces) if possible or on the same group of layers. Vias should only be used in the breakout region of the device to route from the top to bottom layer when necessary. Avoid using vias in the main region of the board at all cost. Use a ground reference via next to signal via. Distance between ground reference via and signal need to be calculated to have similar impedance as traces.
- All differential signals should not be routed over plane split. Changing signal layers is preferable to crossing plane splits.
- Use of and proper placement of stitching caps when split plane crossing is unavoidable to account for high-frequency return current path
- Route differential traces over a continuous plane with no interruptions.
- Do not route differential traces under power connectors or other interface connectors, crystals, oscillators, or any magnetic source.
- Route traces away from etching areas like pads, vias, and other signal traces. Try to maintain a 20 mil keep-out distance where possible.
- Decoupling caps should be placed next to each power terminal on the HD3SS2522. Care should be taken to minimize the stub length of the trace connecting the capacitor to the power pin.
- Avoid sharing vias between multiple decoupling caps.

Copyright © 2015, Texas Instruments Incorporated

Layout Guidelines (continued)

- Place vias as close as possible to the decoupling cap solder pad.
- Widen VCC/GND planes to reduce effect of static and dynamic IR drop.
- The VBUS traces/planes must be wide enough to carry max current for the application.

10.2 Layout Example

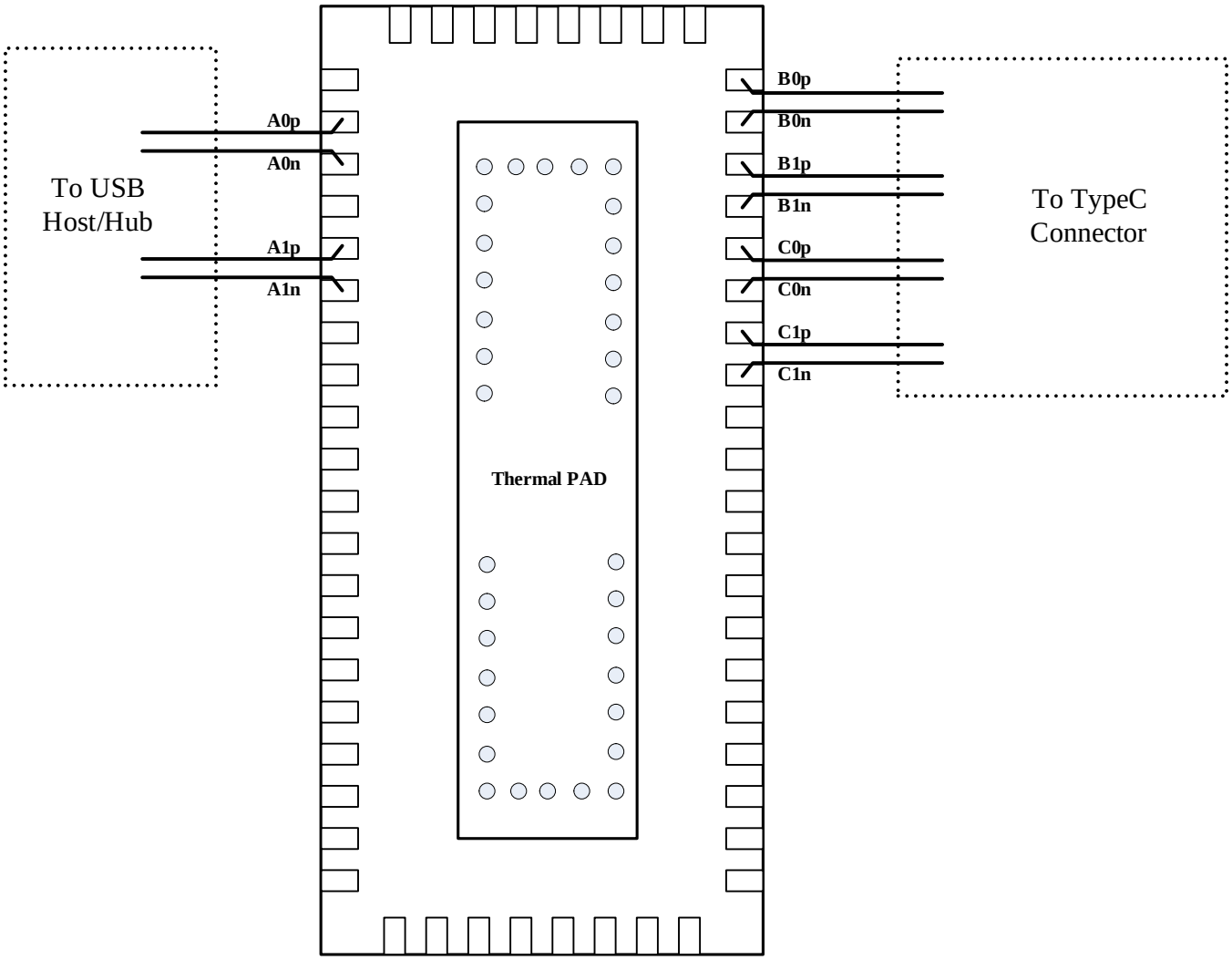

Figure 5. Layout

Copyright © 2015, Texas Instruments Incorporated

11 Device and Documentation Support

11.1 Community Resources

The following links connect to TI community resources. Linked contents are provided "AS IS" by the respective contributors. They do not constitute TI specifications and do not necessarily reflect TI's views; see TI's Terms of Use.

TI E2E™ Online Community ***TI's Engineer-to-Engineer (E2E) Community.*** Created to foster collaboration among engineers. At e2e.ti.com, you can ask questions, share knowledge, explore ideas and help solve problems with fellow engineers.

Design Support ***TI's Design Support*** Quickly find helpful E2E forums along with design support tools and contact information for technical support.

11.2 Trademarks

E2E is a trademark of Texas Instruments.
All other trademarks are the property of their respective owners.

11.3 Electrostatic Discharge Caution



These devices have limited built-in ESD protection. The leads should be shorted together or the device placed in conductive foam during storage or handling to prevent electrostatic damage to the MOS gates.

11.4 Glossary

SLYZ022 — *TI Glossary*.

This glossary lists and explains terms, acronyms, and definitions.

12 Mechanical, Packaging, and Orderable Information

The following pages include mechanical, packaging, and orderable information. This information is the most current data available for the designated devices. This data is subject to change without notice and revision of this document. For browser-based versions of this data sheet, refer to the left-hand navigation.

Copyright © 2015, Texas Instruments Incorporated

PACKAGING INFORMATION

Orderable Device	Status (1)	Package Type	Package Drawing	Pins	Package Qty	Eco Plan (2)	Lead/Ball Finish (6)	MSL Peak Temp (3)	Op Temp (°C)	Device Marking (4/5)	Samples
HD3SS2522RHU	PREVIEW	WQFN	RHU	56	250	TBD	Call TI	Call TI	0 to 70		
HD3SS2522RHUR	ACTIVE	WQFN	RHU	56	2000	Green (RoHS & no Sb/Br)	NIPDAU	Level-3-260C-168 HR	0 to 70	HD3S2522	Samples

(1) The marketing status values are defined as follows:
ACTIVE: Product device recommended for new designs.
LIFEBUY: TI has announced that the device will be discontinued, and a lifetime-buy period is in effect.
NRND: Not recommended for new designs. Device is in production to support existing customers, but TI does not recommend using this part in a new design.
PREVIEW: Device has been announced but is not in production. Samples may or may not be available.
OBSOLETE: TI has discontinued the production of the device.

(2) RoHS: TI defines "RoHS" to mean semiconductor products that are compliant with the current EU RoHS requirements for all 10 RoHS substances, including the requirement that RoHS substance do not exceed 0.1% by weight in homogeneous materials. Where designed to be soldered at high temperatures, "RoHS" products are suitable for use in specified lead-free processes. TI may reference these types of products as "Pb-Free".
RoHS Exempt: TI defines "RoHS Exempt" to mean products that contain lead but are compliant with EU RoHS pursuant to a specific EU RoHS exemption.
Green: TI defines "Green" to mean the content of Chlorine (Cl) and Bromine (Br) based flame retardants meet JS709B low halogen requirements of <=1000ppm threshold. Antimony trioxide based flame retardants must also meet the <=1000ppm threshold requirement.

(3) MSL, Peak Temp. - The Moisture Sensitivity Level rating according to the JEDEC industry standard classifications, and peak solder temperature.

(4) There may be additional marking, which relates to the logo, the lot trace code information, or the environmental category on the device.

(5) Multiple Device Markings will be inside parentheses. Only one Device Marking contained in parentheses and separated by a "~" will appear on a device. If a line is indented then it is a continuation of the previous line and the two combined represent the entire Device Marking for that device.

(6) Lead/Ball Finish - Orderable Devices may have multiple material finish options. Finish options are separated by a vertical ruled line. Lead/Ball Finish values may wrap to two lines if the finish value exceeds the maximum column width.

Important Information and Disclaimer: The information provided on this page represents TI's knowledge and belief as of the date that it is provided. TI bases its knowledge and belief on information provided by third parties, and makes no representation or warranty as to the accuracy of such information. Efforts are underway to better integrate information from third parties. TI has taken and continues to take reasonable steps to provide representative and accurate information but may not have conducted destructive testing or chemical analysis on incoming materials and chemicals. TI and TI suppliers consider certain information to be proprietary, and thus CAS numbers and other limited information may not be available for release.

In no event shall TI's liability arising out of such information exceed the total purchase price of the TI part(s) at issue in this document sold by TI to Customer on an annual basis.

TAPE AND REEL INFORMATION

REEL DIMENSIONS

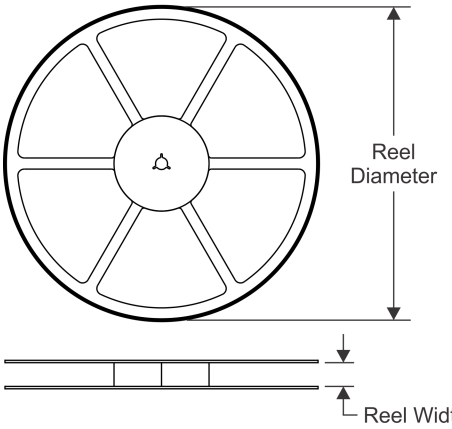

TAPE DIMENSIONS

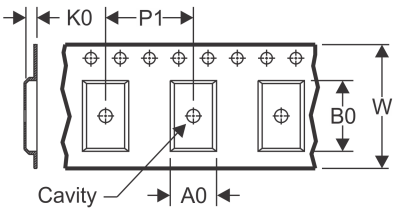

A0	Dimension designed to accommodate the component width
B0	Dimension designed to accommodate the component length
K0	Dimension designed to accommodate the component thickness
W	Overall width of the carrier tape
P1	Pitch between successive cavity centers

QUADRANT ASSIGNMENTS FOR PIN 1 ORIENTATION IN TAPE

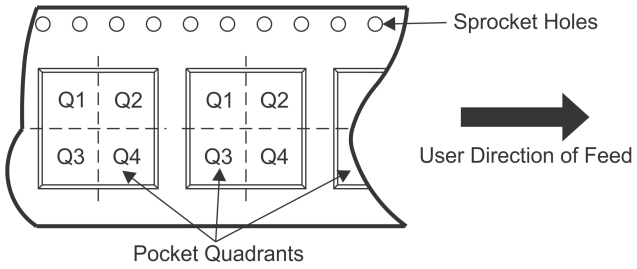

*All dimensions are nominal

Device	Package Type	Package Drawing	Pins	SPQ	Reel Diameter (mm)	Reel Width W1 (mm)	A0 (mm)	B0 (mm)	K0 (mm)	P1 (mm)	W (mm)	Pin1 Quadrant
HD3SS2522RHUR	WQFN	RHU	56	2000	330.0	24.4	5.3	11.3	1.0	8.0	24.0	Q1

TAPE AND REEL BOX DIMENSIONS

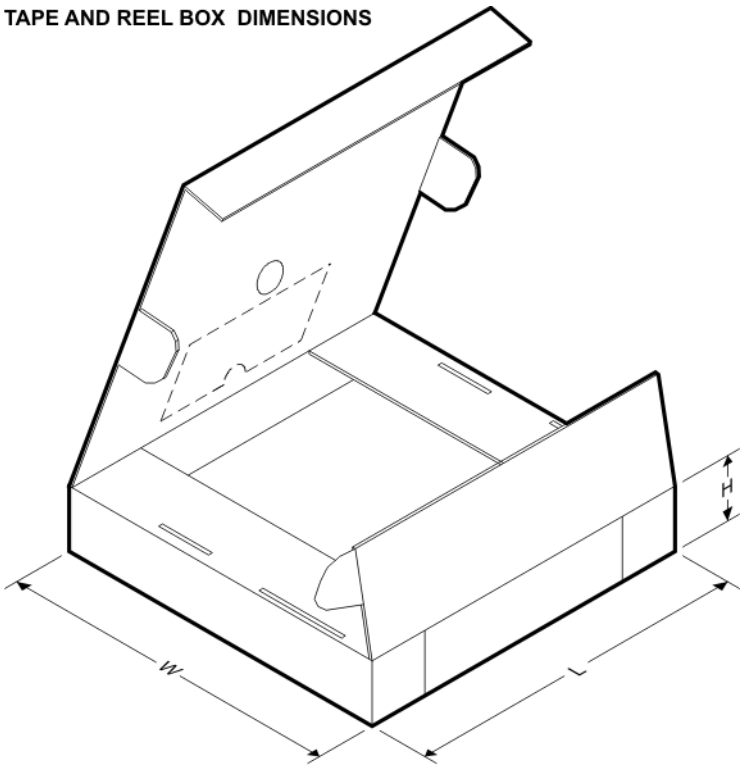

*All dimensions are nominal

Device	Package Type	Package Drawing	Pins	SPQ	Length (mm)	Width (mm)	Height (mm)
HD3SS2522RHUR	WQFN	RHU	56	2000	367.0	367.0	45.0

RHU (R–PWQFN–N56) PLASTIC QUAD FLATPACK NO–LEAD

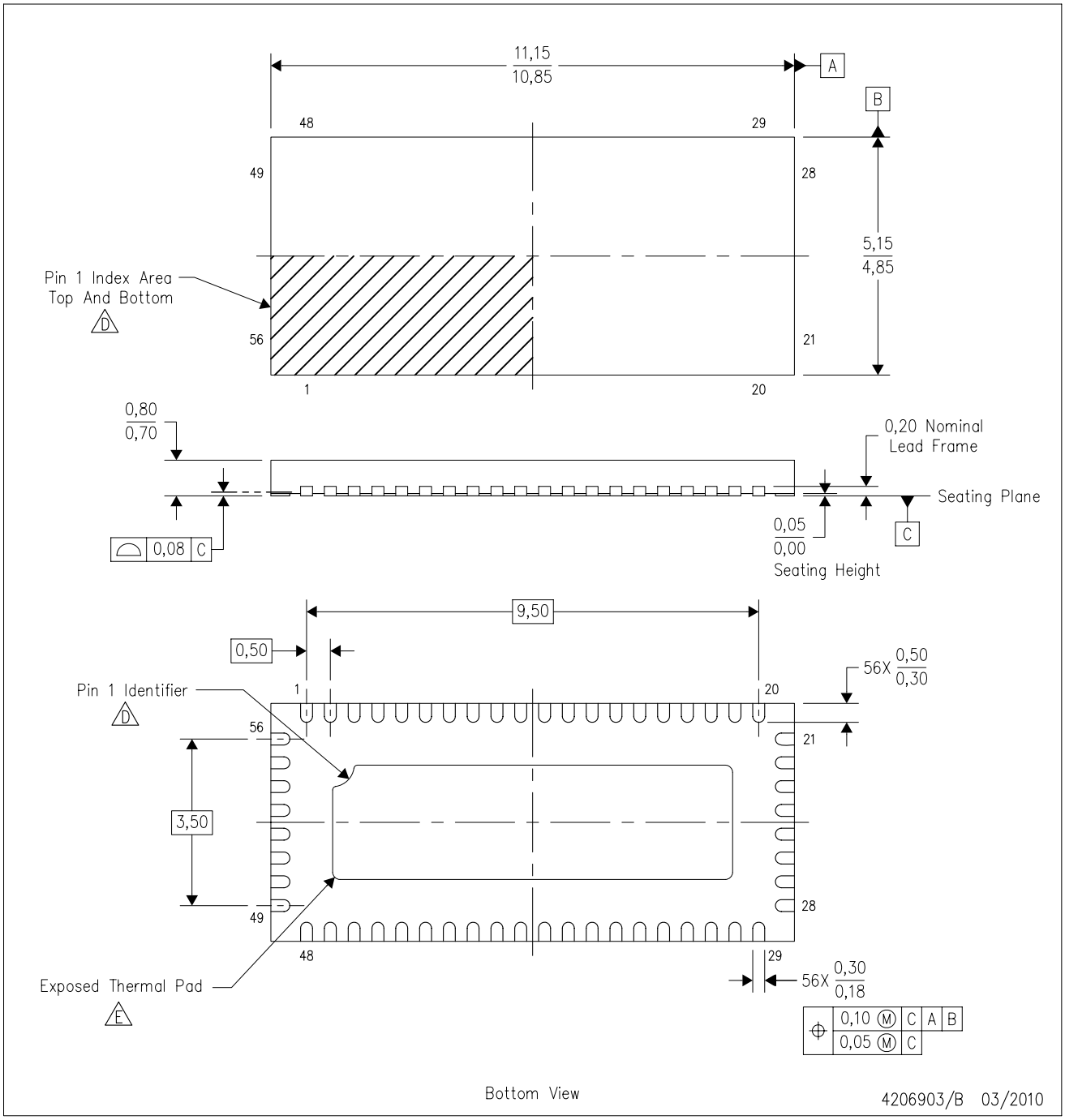

Notes:
A. All linear dimensions are in millimeters. Dimensioning and tolerancing per ASME Y14.5M–1994.
B. This drawing is subject to change without notice.
C. QFN (Quad Flatpack No–Lead) package configuration.
D. Pin 1 identifiers are located on both top and bottom of the package and within the zone indicated. The Pin 1 identifiers are either a molded, marked, or metal feature.
E. The package thermal pad must be soldered to the board for thermal and mechanical performance.
F. JEDEC MO–220 package registration is pending.

RHU (R–PWQFN–N56) PLASTIC QUAD FLATPACK NO–LEAD

THERMAL INFORMATION

This package incorporates an exposed thermal pad that is designed to be attached directly to an external heatsink. The thermal pad must be soldered directly to the printed circuit board (PCB). After soldering, the PCB can be used as a heatsink. In addition, through the use of thermal vias, the thermal pad can be attached directly to the appropriate copper plane shown in the electrical schematic for the device, or alternatively, can be attached to a special heatsink structure designed into the PCB. This design optimizes the heat transfer from the integrated circuit (IC).

For information on the Quad Flatpack No–Lead (QFN) package and its advantages, refer to Application Report, QFN/SON PCB Attachment, Texas Instruments Literature No. SLUA271. This document is available at www.ti.com.

The exposed thermal pad dimensions for this package are shown in the following illustration.

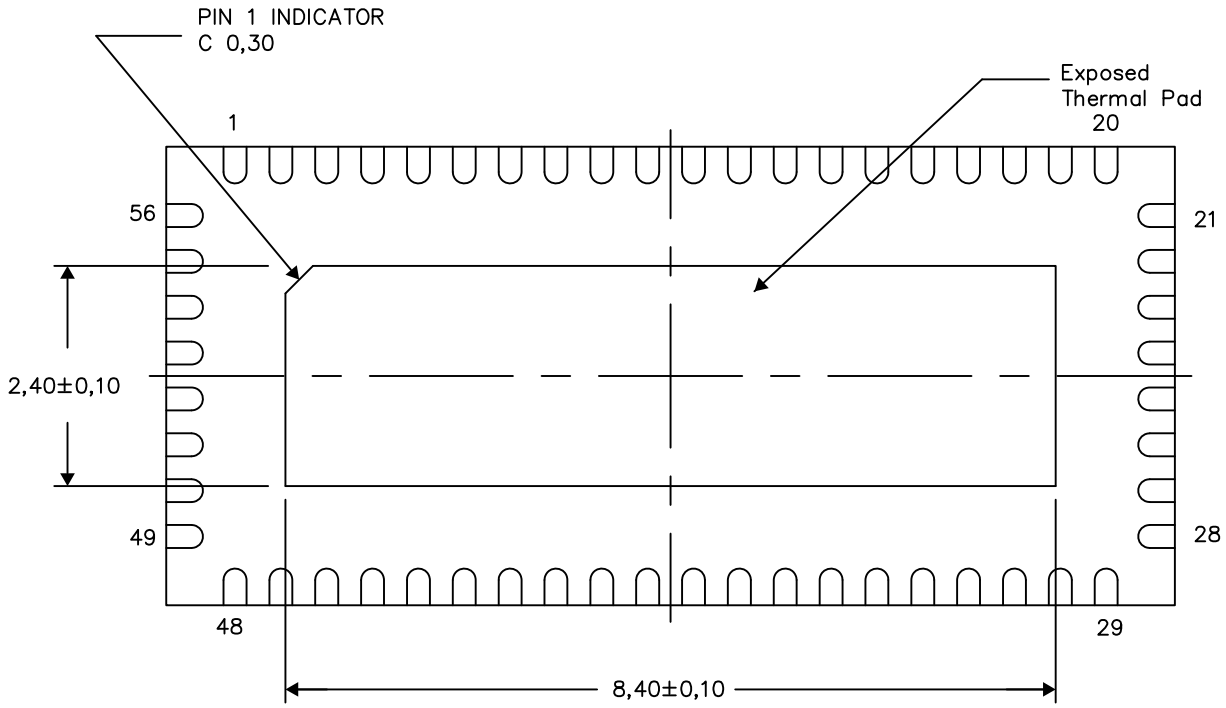

Bottom View

Exposed Thermal Pad Dimensions

4206904/G 03/14

NOTE: All linear dimensions are in millimeters

RHU (R–PWQFN–N56) PLASTIC QUAD FLATPACK NO–LEAD

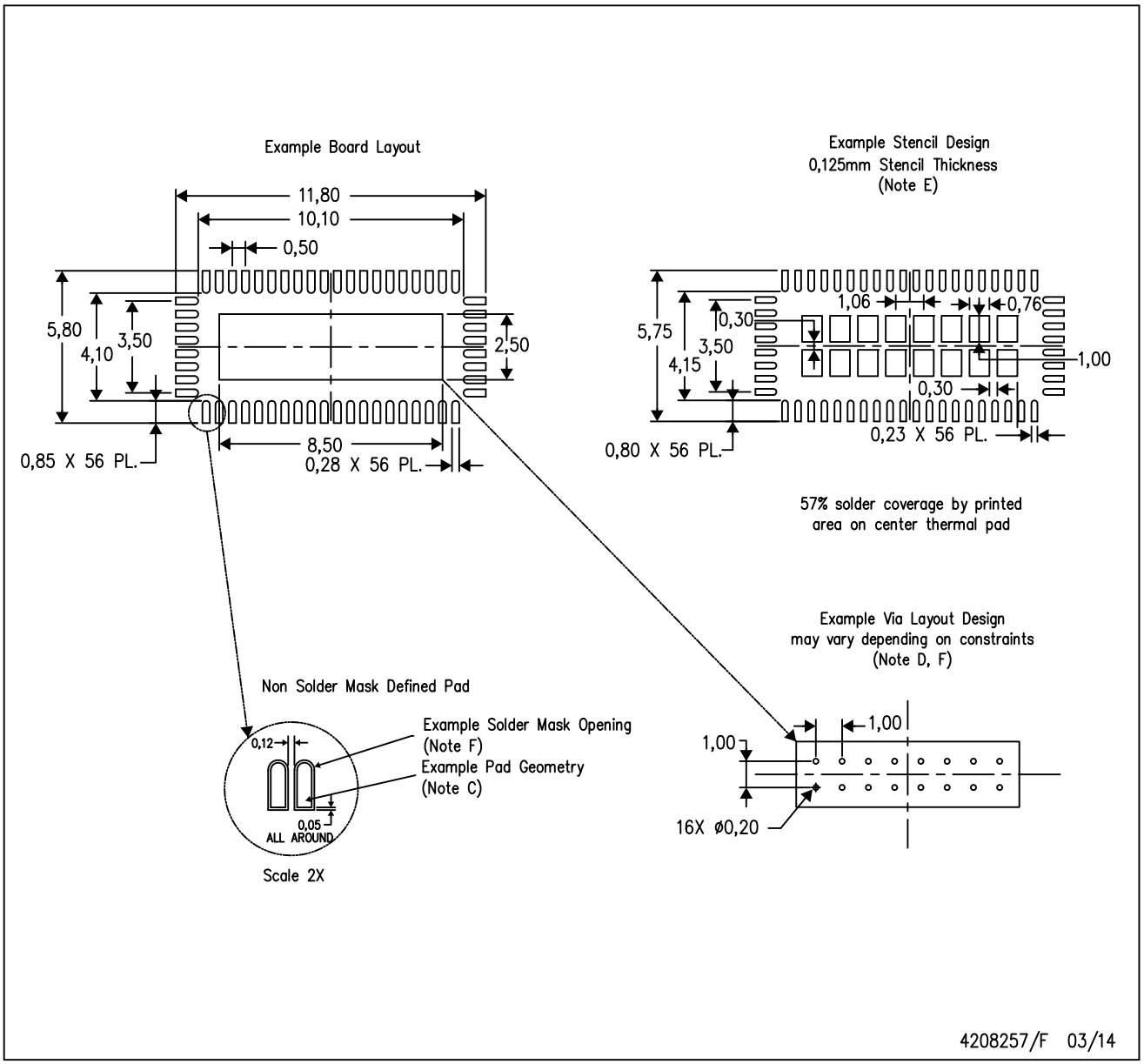

NOTES:
A. All linear dimensions are in millimeters.
B. This drawing is subject to change without notice.
C. Publication IPC–7351 is recommended for alternate designs.
D. This package is designed to be soldered to a thermal pad on the board. Refer to Application Note, Quad Flat–Pack Packages, Texas Instruments Literature No. SLUA271, and also the Product Data Sheets for specific thermal information, via requirements, and recommended board layout. These documents are available at www.ti.com <http://www.ti.com>.
E. Laser cutting apertures with trapezoidal walls and also rounding corners will offer better paste release. Customers should contact their board assembly site for stencil design recommendations. Refer to IPC 7525 for stencil design considerations. Customers should contact their board fabrication site for minimum solder mask web tolerances between signal pads.

IMPORTANT NOTICE AND DISCLAIMER

TI PROVIDES TECHNICAL AND RELIABILITY DATA (INCLUDING DATASHEETS), DESIGN RESOURCES (INCLUDING REFERENCE DESIGNS), APPLICATION OR OTHER DESIGN ADVICE, WEB TOOLS, SAFETY INFORMATION, AND OTHER RESOURCES “AS IS” AND WITH ALL FAULTS, AND DISCLAIMS ALL WARRANTIES, EXPRESS AND IMPLIED, INCLUDING WITHOUT LIMITATION ANY IMPLIED WARRANTIES OF MERCHANTABILITY, FITNESS FOR A PARTICULAR PURPOSE OR NON-INFRINGEMENT OF THIRD PARTY INTELLECTUAL PROPERTY RIGHTS.

These resources are intended for skilled developers designing with TI products. You are solely responsible for (1) selecting the appropriate TI products for your application, (2) designing, validating and testing your application, and (3) ensuring your application meets applicable standards, and any other safety, security, or other requirements. These resources are subject to change without notice. TI grants you permission to use these resources only for development of an application that uses the TI products described in the resource. Other reproduction and display of these resources is prohibited. No license is granted to any other TI intellectual property right or to any third party intellectual property right. TI disclaims responsibility for, and you will fully indemnify TI and its representatives against, any claims, damages, costs, losses, and liabilities arising out of your use of these resources.

TI’s products are provided subject to TI’s Terms of Sale (www.ti.com/legal/termsofsale.html) or other applicable terms available either on ti.com or provided in conjunction with such TI products. TI’s provision of these resources does not expand or otherwise alter TI’s applicable warranties or warranty disclaimers for TI products.

Mailing Address: Texas Instruments, Post Office Box 655303, Dallas, Texas 75265
Copyright © 2020, Texas Instruments Incorporated