HD3SS213 5.4-Gbps DisplayPort 1.2a 2:1 and 1:2 Differential Switch

1 Features

- Compatible with DisplayPort 1.2 electrical standard
- 2:1 and 1:2 switching supporting data rates up to 5.4 Gbps
- Supports HPD switching
- Supports AUX and DDC switching
- Wide –3-dB differential BW of over 5.4 GHz
- Excellent dynamic characteristics (at 2.7 GHz):
  - Crosstalk = –50 dB
  - Isolation = –25 dB
  - Insertion loss = –1.5 dB
  - Return loss = –13 dB
  - Maximum bit-bit skew = 5 ps
- V_{DD} Operating range: 3.3 V ±10%
- Package Options:
  - 5 mm × 5 mm, 50-Pin nFBGA
- Output enable (OE) pin disables switch to save power
- HD3SS213 < 10 mW (standby < 30 µW when OE = L)

2 Applications

- PC & notebooks
- Tablets
- Connected peripherals & printers

3 Description

The HD3SS213 device is a high-speed passive switch capable of switching two full DisplayPort 4 lane ports from one of two sources to one target location in an application. It also switches one source to one of two sinks. For DisplayPort applications, the HD3SS213 supports switching of the Auxiliary (AUX), Display Data Channel (DDC), and Hot Plug Detect (HPD) signals in the ZEQ package.

One typical application is a mother board that includes two GPUs that need to drive one DisplayPort sink. The GPU is selected by the Dx_SEL pin. Another application is when one source needs to switch between one of two sinks which the example is a side connector and a docking station connector. The switching is controlled using the Dx_SEL and AUX_SEL pins. The HD3SS213 operates from a single supply voltage of 3.3 V over the full industrial temperature range of –40°C to 105°C.

Device Information (1)

PART NUMBER	PACKAGE	BODY SIZE (NOM)
HD3SS213	nFBGA (50)	5.00 mm x 5.00 mm

(1) For all available packages, see the orderable addendum at the end of the datasheet.

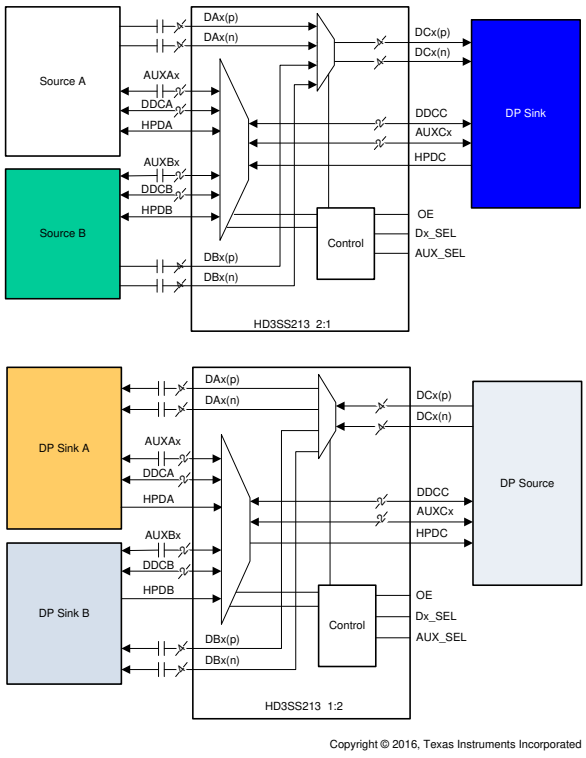

Copyright © 2016, Texas Instruments Incorporated

HD3SS213 Application Block Diagram

Table of Contents

1 Features....1
2 Applications....1
3 Description....1
4 Revision History....2
5 Pin Configuration and Functions....3
6 Specifications....5
6.1 Absolute Maximum Ratings....5
6.2 ESD Ratings....5
6.3 Recommended Operating Conditions....5
6.4 Thermal Information....6
6.5 Electrical Characteristics....6
6.6 Timing Requirements....7
6.7 Typical Characteristics....9
7 Detailed Description....10
7.1 Overview....10
7.2 Functional Block Diagram....10
7.3 Feature Description....11
7.4 Device Functional Modes....11
8 Application and Implementation....12
8.1 Application Information....12
8.2 Typical Applications....13
9 Layout....16
9.1 Layout Guidelines....16
9.2 Layout Example....17
10 Device and Documentation Support....18
10.1 Receiving Notification of Documentation Updates....18
10.2 Support Resources....18
10.3 Trademarks....18
10.4 Electrostatic Discharge Caution....18
10.5 Glossary....18
11 Mechanical, Packaging, and Orderable Information....18

4 Revision History

NOTE: Page numbers for previous revisions may differ from page numbers in the current version.

Changes from Revision B (December 2016) to Revision C (January 2021)	Page
• NOTE: The device in the MicroStar Jr. BGA packaging were redesigned using a laminate nFBGA package. This nFBGA package offers datasheet-equivalent electrical performance. It is also footprint equivalent to the MicroStar Jr. BGA. The new package designator in place of the discontinued package designator will be updated throughout the datasheet.	1
• Changed u*jr BGA to nFBGA.	1
• Changed ZQE to ZXH.	3
• Changed u*jr ZQE to nFBGA ZXH. Updated thermal data.	6
• Changed u*jr BGA to nFBGA.	10

Changes from Revision A (September 2013) to Revision B (December 2016)	Page
• Added *Device Information* table, *ESD Ratings* table, *Feature Description* section, *Device Functional Modes* section, *Application and Implementation* section, *Power Supply Recommendations* section, *Layout* section, *Device and Documentation Support* section, and *Mechanical, Packaging, and Orderable Information* section.	1
• Added A2 to J4 row in *Pin Functions* table.	3

Changes from Revision * (September 2013) to Revision A (September 2013)	Page
• Deleted Ordering Information.	3

Copyright © 2021 Texas Instruments Incorporated

5 Pin Configuration and Functions

	1	2	3	4	5	6	7	8	9
A	Dx_SEL	VDD		DA0(n)	DA1(n)	DA2(n)		DA3(p)	DA3(n)
B	DC0(n)	DC0(p)	GND	DA0(p)	DA1(p)	DA2(p)	OE	DB0(p)	DB0(n)
C		AUX_SEL						GND	
D	DC1(n)	DC1(p)						DB1(p)	DB1(n)
E	DC2(n)	DC2(p)						DB2(p)	DB2(n)
F	DC3(n)	DC3(p)						DB3(p)	DB3(n)
G		GND						GND	
H	AUXC(n)	AUXC(p)	HPDB	GND	DDCCLK_B	AUXB(p)	GND	DDCCLK_A	AUXA(p)
J	HPDC	HPDA	DDCCLK_C	VDD	DDCDAT_B	AUXB(n)	DDCDAT_C	DDCDAT_A	AUXA(n)

nFBGA 50-Pin ZXH Package Top View

Table 5-1. Pin Functions

PIN		TYPE[1]	DESCRIPTION[2]
NO.	NAME		
H9, J9	AUXA(p), AUXA(n)	I/O	Port A AUX positive signal Port A AUX negative signal
H6, J6	AUXB(p), AUXB(n)	I/O	Port B AUX positive signal Port B AUX negative signal
H2, H1	AUXC(p), AUXC(n)	I/O	Port C AUX positive signal Port C AUX negative signal
C2	AUX_SEL	I	AUX/DDC selection control pin in conjunction with Dx_SEL Pin

Copyright © 2021 Texas Instruments Incorporated

Table 5-1. Pin Functions (continued)

PIN		TYPE[1]	DESCRIPTION[2]
NO.	NAME		
NA	CADA/B/C	I/O	Port A/B/C cable activity detect
B4, A4	DA0(p), DA0(n)	I/O	Port A, Channel 0, High speed positive signal Port A, Channel 0, High speed negative signal
B5, A5	DA1(p), DA1(n)	I/O	Port A, Channel 1, High speed positive signal Port A, Channel 1, High speed negative signal
B6, A6	DA2(p), DA2(n)	I/O	Port A, Channel 2, High speed positive signal Port A, Channel 2, High speed negative signal
A8, A9	DA3(p), DA3(n)	I/O	Port A, Channel 3, High speed positive signal Port A, Channel 3, High speed negative signal
B8, B9	DB0(p), DB0(n)	I/O	Port B, Channel 0, High speed positive signal Port B, Channel 0, High speed negative signal
D8, D9	DB1(p), DB1(n)	I/O	Port B, Channel 1, High speed positive signal Port B, Channel 1, High speed negative signal
E8, E9	DB2(p), DB2(n)	I/O	Port B, Channel 2, High speed positive signal Port B, Channel 2, High speed negative signal
F8, F9	DB3(p), DB3(n)	I/O	Port B, Channel 3, High speed positive signal Port B, Channel 3, High speed negative signal
B2, B1	DC0(p), DC0(n)	I/O	Port C, Channel 0, High speed positive signal Port C, Channel 0, High speed negative signal
D2, D1	DC1(p), DC1(n)	I/O	Port C, Channel 1, High speed positive signal Port C, Channel 1, High speed negative signal
E2, E1	DC2(p), DC2(n)	I/O	Port C, Channel 2, High speed positive signal Port C, Channel 2, High speed negative signal
F2, F1	DC3(p), DC3(n)	I/O	Port C, Channel 3, High speed positive signal Port C, Channel 3, High speed negative signal
H8, J8	DDCCLK_A, DDCDAT_A	I/O	Port A DDC clock signal Port A DDC data signal
H5, J5	DDCCLK_B, DDCDAT_B	I/O	Port B DDC clock signal Port B DDC data signal
J3, J7	DDCCLK_C, DDCDAT_C	I/O	Port C DDC clock signal Port C DDC data signal
A1	Dx_SEL	I	High speed port selection control pins
B3, C8, G2, G8, H4, H7	GND	S	Ground
J2	HPDA	I/O	Port A hot plug detect
H3	HPDB	I/O	Port B hot plug detect
J1	HPDC	I/O	Port C hot plug detect
B7	OE	I	Output enable: OE = V_{IH}: Normal operation OE = V_{IL}: Standby mode
A2, J4	VDD	S	3.3-V positive power supply voltage

(1) I = Input, O = Output, S = Supply

(2) The high speed data ports incorporate 20-kΩ pulldown resistors that are switched in when a port is not selected and switched out when the port is selected.

Copyright © 2021 Texas Instruments Incorporated

6 Specifications

6.1 Absolute Maximum Ratings

over operating free-air temperature range (unless otherwise noted) (1)

		MIN	MAX	UNIT
Supply voltage, V_{DD} (2)		–0.5	4	V
Voltage	Differential I/O	–0.5	4	V
	Control pin	–0.5	V_{DD} + 0.5	
Continuous power dissipation		See *Section 6.4*		
Operating free-air temperature, T_A		–40	105	°C
Storage temperature, T_{stg}			150	°C

(1) Stresses beyond those listed under *Absolute Maximum Ratings* may cause permanent damage to the device. These are stress ratings only, which do not imply functional operation of the device at these or any other conditions beyond those indicated under *Recommended Operating Conditions*. Exposure to absolute-maximum-rated conditions for extended periods may affect device reliability.

(2) All voltage values, except differential voltages, are with respect to network ground terminal.

6.2 ESD Ratings

			VALUE	UNIT
$V_{(ESD)}$	Electrostatic discharge	Human-body model (HBM), per ANSI/ESDA/JEDEC JS-001(1)	±2000	V
		Charged-device model (CDM), per JEDEC specification JESD22-C101(2)	±500	

(1) JEDEC document JEP155 states that 500-V HBM allows safe manufacturing with a standard ESD control process.

(2) JEDEC document JEP157 states that 250-V CDM allows safe manufacturing with a standard ESD control process.

6.3 Recommended Operating Conditions

Typical values for all parameters are at V_{CC} = 3.3 V and T_A = 25°C (unless otherwise noted). All temperature limits are specified by design.

PARAMETER		TEST CONDITIONS	MIN	NOM	MAX	UNIT
V_{DD}	Supply voltage		3	3.3	3.6	V
V_{IH}	Input high voltage	Control pins and signal pins (Dx_SEL, AUX_SEL, OE, HPDx)	2		V_{DD}	V
V_{IM}	Input mid level voltage	AUX_SEL pin	V_{DD}/2 – 300 mV	V_{DD}/2	V_{DD}/2 + 300 mV	V
V_{IL}	Input low voltage	Control pins and signal pins (Dx_SEL, AUX_SEL, OE, HPDx)	–0.1		0.8	V
V_{I/O_Diff}	Differential voltage (Dx, AUXx)	Switch I/O differential voltage	0		1.8	V_{PP}
V_{I/O_CM}	Dx switching I/O common-mode voltage	Switch I/O common-mode voltage	0		2	V
	AUXx switching I/O common-mode voltage	Switch I/O common-mode voltage	0		3.6	V
I_{IH}	Input high current (Dx_SEL, AUX_SEL)	V_{DD} = 3.6 V, V_{IN} = V_{DD}			1	µA
I_{IM}	Input mid level current (AUX_SEL)	V_{DD} = 3.6V, V_{IN} = V_{DD}/2			1	µA
I_{IL}	Input low current (Dx_SEL, AUX_SEL)	V_{DD} = 3.6 V, V_{IN} = GND			1	µA
I_{LK}	Leakage current (Dx_SEL, AUX_SEL)	V_{DD} = 3.3 V, V_I = 2 V, OE = 3.3 V			1	µA
	Leakage current (HPDx)	V_{DD} = 3.3 V, V_I = 2 V, OE = 3.3 V, Dx_SEL = 3.3 V			1	µA
		V_{DD} = 3.3 V, V_I = 2 V, OE = 3.3 V, Dx_SEL = GND			1	

Copyright © 2021 Texas Instruments Incorporated

Typical values for all parameters are at V_{CC} = 3.3 V and T_A = 25°C (unless otherwise noted). All temperature limits are specified by design.

PARAMETER		TEST CONDITIONS	MIN	NOM	MAX	UNIT
I_{off}	Device shut down current	V_{DD} = 3.6 V, OE = GND			2.5	µA
I_{DD}	Supply current	V_{DD} = 3.6 V, Dx_SEL or AUX_SEL = V_{DD} or GND		0.6	1	mA
DA, DB, DC HIGH SPEED SIGNAL PATH						
C_{ON}	Outputs ON capacitance	V_I = 0 V, outputs open, switch ON		1.5		pF
C_{OFF}	Outputs OFF capacitance	V_I = 0 V, outputs open, switch OFF		1		pF
R_{ON}	ON resistance	V_{DD} = 3.3 V, VCM = 0.5 V to 1.5 V, I_O = –40 mA		8	12	Ω
ΔR_{ON}	ON resistance match between pairs of the same channel	V_{DD} = 3.3 V, 0.5 V ≤ V_I ≤ 1.2V, I_O = –40 mA			1.5	Ω
R_{FLAT_ON}	ON resistance flatness, $R_{ON(max)} – R_{ON(min)}$	V_{DD} = 3.3 V, 0.5 V ≤ V_I ≤ 1.2 V		1.3		Ω
AUXx, DDC SIGNAL PATH						
C_{ON}	Outputs ON capacitance	V_I = 0 V, outputs open, switch ON		9		pF
C_{OFF}	Outputs OFF capacitance	V_I = 0 V, outputs open, switch OFF		3		pF
$R_{ON(AUX)}$	ON resistance	V_{DD} = 3.3 V, V_{CM} = 0 V – V_{DD}, I_O = –8 mA		6	10	Ω
$R_{ON(DDC)}$	ON resistance on DDC channel	V_{DD} = 3.3 V, V_{CM} = 0.4 V, I_O = –3 mA		20	30	Ω

6.4 Thermal Information

THERMAL METRIC		HD3SS213 nFBGA (ZXH) 50 PIN	UNIT
$R_{\theta JA}$	Junction-to-ambient thermal resistance	72.9	°C/W
$R_{\theta JC(top)}$	Junction-to-case (top) thermal resistance	35.9	°C/W
$R_{\theta JB}$	Junction-to-board thermal resistance	43.1	°C/W
ψ_{JT}	Junction-to-top characterization parameter	1.6	°C/W
ψ_{JB}	Junction-to-board characterization parameter	42.9	°C/W
$R_{\theta JC(bot)}$	Junction-to-case (bottom) thermal resistance	—	°C/W

6.5 Electrical Characteristics

over recommended operating conditions; R_L and R_{SC} = 50 Ω (unless otherwise noted)(1)

PARAMETER		TEST CONDITIONS	MIN	TYP	MAX	UNIT
R_L	Dx differential return loss	1.35 GHz		–17		dB
		2.7 GHz		–13		
X_{TALK}	Dx differential crosstalk	2.7 GHz		–50		dB
O_{IRR}	Dx differential off-isolation	2.7 GHz		–25		dB
I_L	Dx differential insertion loss	f = 1.35 GHz		–1		dB
		f = 2.7 GHz		–1.5		
	AUX –3-dB bandwidth			360		MHz

(1) For return loss, crosstalk, off-isolation, and insertion loss values, the data was collected on a Rogers material board with minimum length traces on the input and output of the device under test.

Copyright © 2021 Texas Instruments Incorporated

6.6 Timing Requirements

over recommended operating conditions; R_L and R_{SC} = 50 Ω (unless otherwise noted)

PARAMETER		TEST CONDITIONS	MIN	TYP	MAX	UNIT
t_{PD}	Switch propagation delay	R_{SC} and R_L = 50 Ω, see Figure 6-2			100	ps
T_{on}	Dx_SEL/AUX_SEL-to-switch Ton (Data, AUX and DDC)	R_{SC} and R_L = 50 Ω, see Figure 6-1		0.7	1	µs
T_{off}	Dx_SEL/AUX_SEL-to-switch Toff (Data, AUX and DDC)	R_{SC} and R_L = 50 Ω, see Figure 6-1		0.7	1	µs
T_{on}	Dx_SEL/AUX_SEL-to-switch Ton (HPD)	R_L = 50 Ω, see Figure 6-1		0.7	1	µs
T_{off}	Dx_SEL/AUX_SEL-to-switch Toff (HPD)	R_L = 50 Ω, see Figure 6-1		0.7	1	µs
$T_{SK(O)}$	Inter-pair output skew (CH-CH)	R_{SC} and R_L = 1 kΩ, see Figure 6-2			50	ps
$T_{SK(b-b)}$	Intra-pair output skew (bit-bit)	R_{SC} and R_L = 1 kΩ, see Figure 6-2		1	5	ps

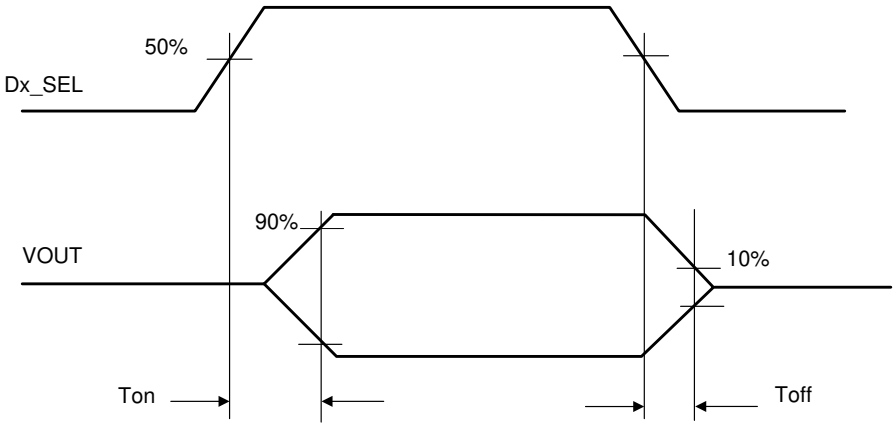

Figure 6-1. Select to Switch Ton and Toff

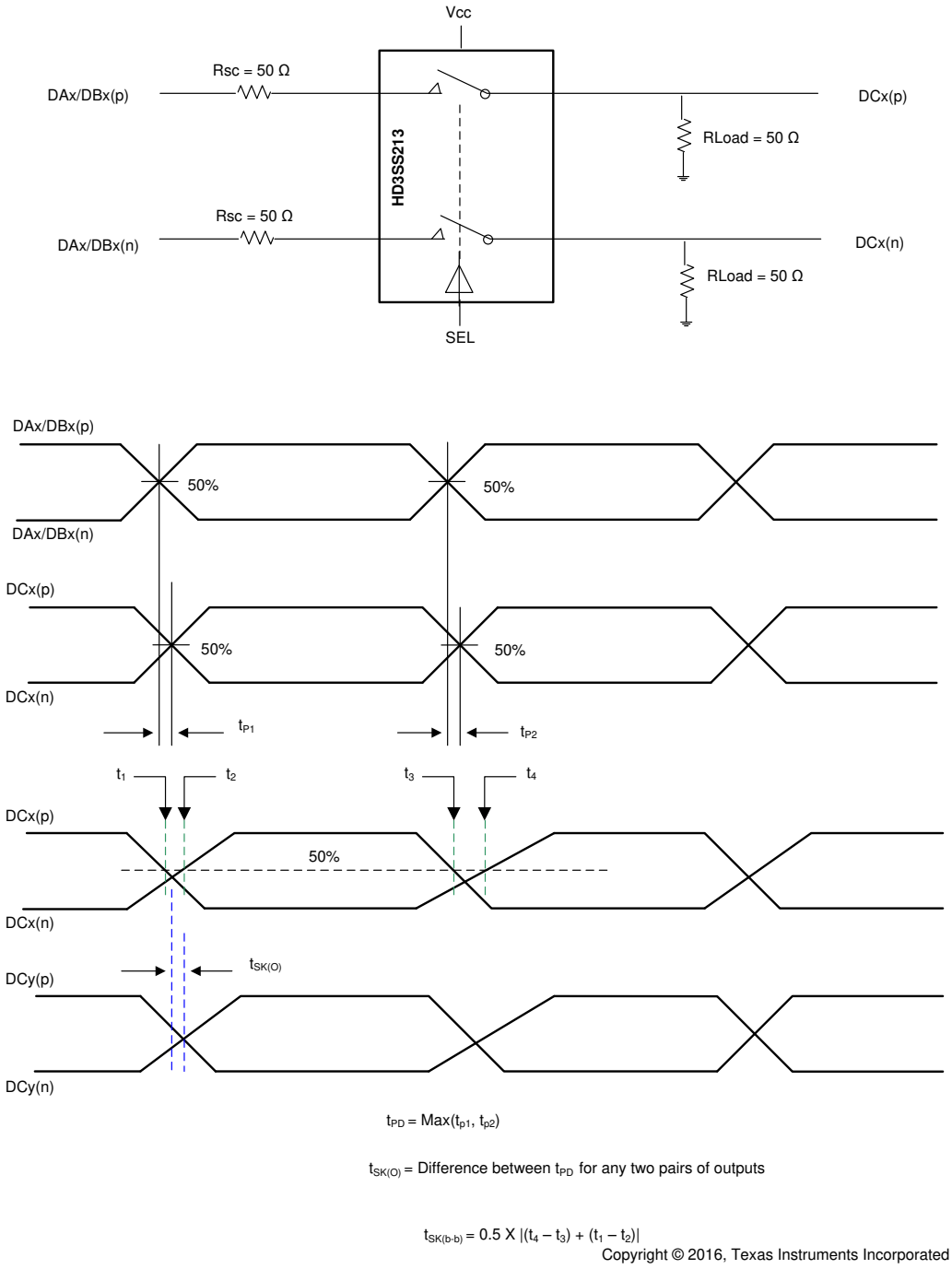

Copyright © 2016, Texas Instruments Incorporated

Figure 6-2. Propagation Delay and Skew

Copyright © 2021 Texas Instruments Incorporated

6.7 Typical Characteristics

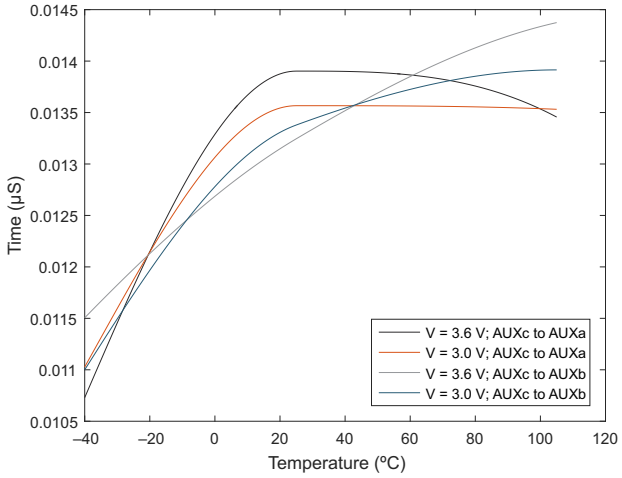

Figure 6-3. DxSEL to Switch Toff

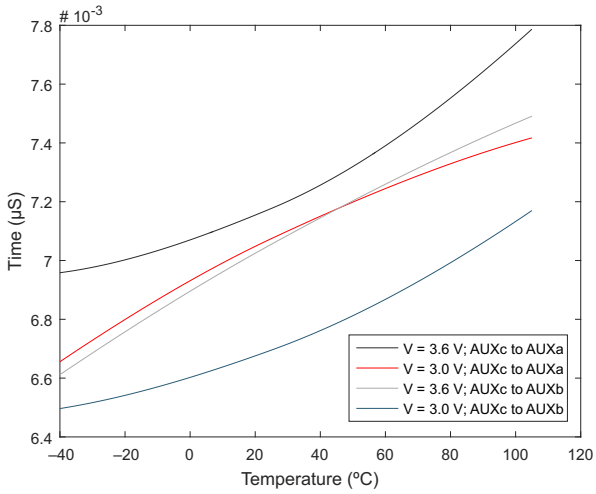

Figure 6-4. DxSEL to Switch Ton

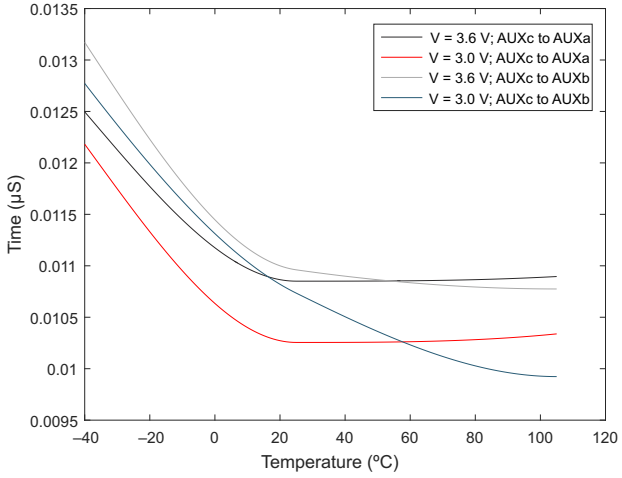

Figure 6-5. OUTEN to Switch Toff

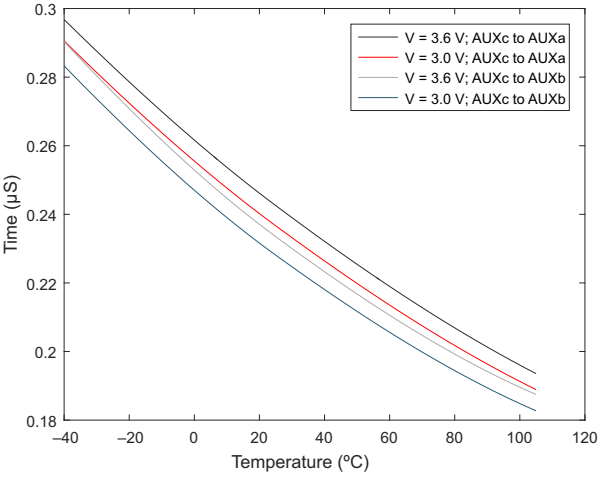

Figure 6-6. OUTEN to Switch Ton

Copyright © 2021 Texas Instruments Incorporated

7 Detailed Description

7.1 Overview

The HD3SS213 device is a high-speed passive switch offered in an industry standard 50-pin nFBGA package. The device is specified to operate from a single supply voltage of 3.3 V over the industrial temperature range of –40°C to 105°C. The HD3SS213 is a generic 4-CH high-speed mux/demux type of switch that can be used for routing high-speed signals between two different locations on a circuit board. The HD3SS213 also supports several other high speed data protocols with a differential amplitude of < 1800 mV_{PP} and a common-mode voltage of < 2 V, as with USB 3.0 and DisplayPort 1.2. For display port applications, the HD3SS213 also supports switching of both the auxiliary and hot plug detect signals.

The high speed port selection control inputs of the device, Dx_SEL and AUX_SEL pins can easily be controlled by available GPIO pins within a system.

7.2 Functional Block Diagram

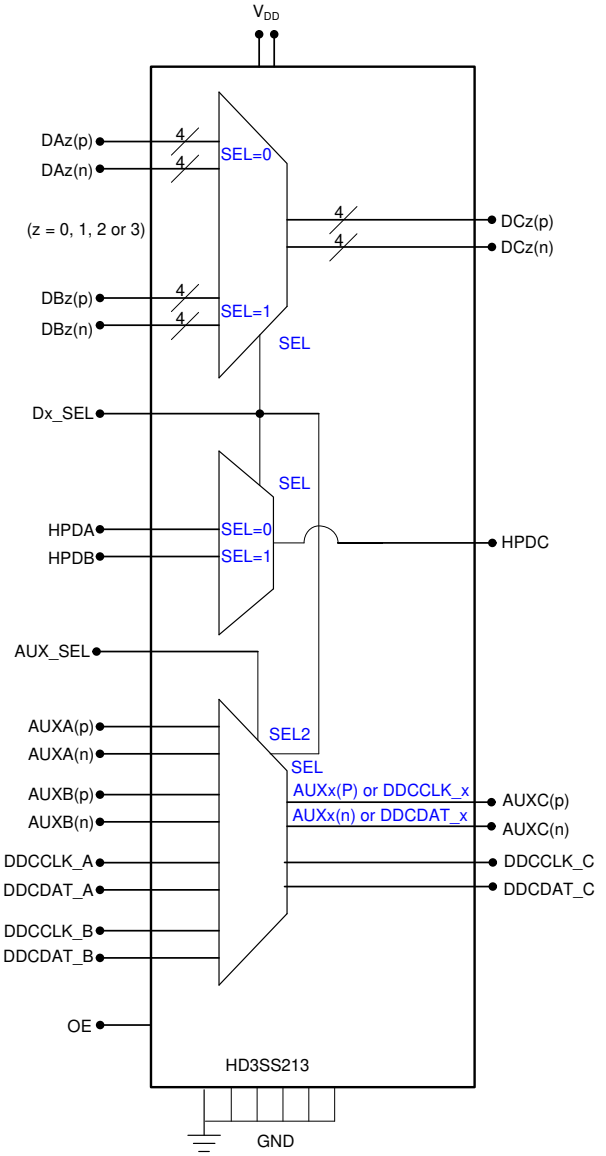

Copyright © 2016, Texas Instruments Incorporated

Copyright © 2021 Texas Instruments Incorporated

7.3 Feature Description

The HD3SS213 behaves as a two to one or one to two using high bandwidth pass gates (see *Section 7.2*). The input ports are selected using the AUX_SEL and Dx_SEL pins which are shown in Table 7-1.

Table 7-1. AUX/DDC Switch Control Logic

CONTROL LINES		SWITCHED I/O PINS					
AUX_SEL	Dx_SEL	AUXA	AUXB	AUXC	DDCA	DDCB	DDCC
L	L	To/From AUXC	Z	To/From AUXA	Z	Z	Z
L	H	Z	To/From AUXC	To/From AUXB	Z	Z	Z
H	L	Z	Z	To/From DDCA	To/From AUXC	Z	Z
H	H	Z	Z	To/From DDCB	Z	To/From AUXC	Z
M	L	To/From AUXC	Z	To/From AUXA	To/From DDCC	Z	To/From DDCA
M	H	Z	To/From AUXC	To/From AUXB	Z	To/From DDCC	To/From DDCB

7.4 Device Functional Modes

The HD3SS213 can be operated in normal operation mode or in shut down mode. In normal operation, the inputs ports of the HD3SS213 are routed to the output ports according to Table 7-1. In standby mode, the HD3SS213 is disabled to enable power savings with a typical current consumption of 2.5 µA. The functional mode is selected through the OE input pin with HIGH for normal operation and LOW for standby.

Copyright © 2021 Texas Instruments Incorporated

8 Application and Implementation

Note

Information in the following applications sections is not part of the TI component specification, and TI does not warrant its accuracy or completeness. TI's customers are responsible for determining suitability of components for their purposes. Customers should validate and test their design implementation to confirm system functionality.

8.1 Application Information

Many interfaces require AC coupling between the source and sink. The 0402 capacitors are the preferred option to provide AC coupling, and the 0603 size capacitors also work. The 0805 size capacitors and C-packs must be avoided. When placing AC coupling capacitors symmetric placement is best. A capacitor value of 0.1 µF is best and the value must be match for the ± signal pair. There are several placement options for the AC coupling capacitors. Because the switch requires a bias voltage, the capacitors must only be placed on one side of the switch. If they are placed on both sides of the switch, a biasing voltage must be provided. A few placement options are shown below.

In Figure 8-1, the coupling capacitors are placed on the source pair. In this situation, the switch is biased by the sink.

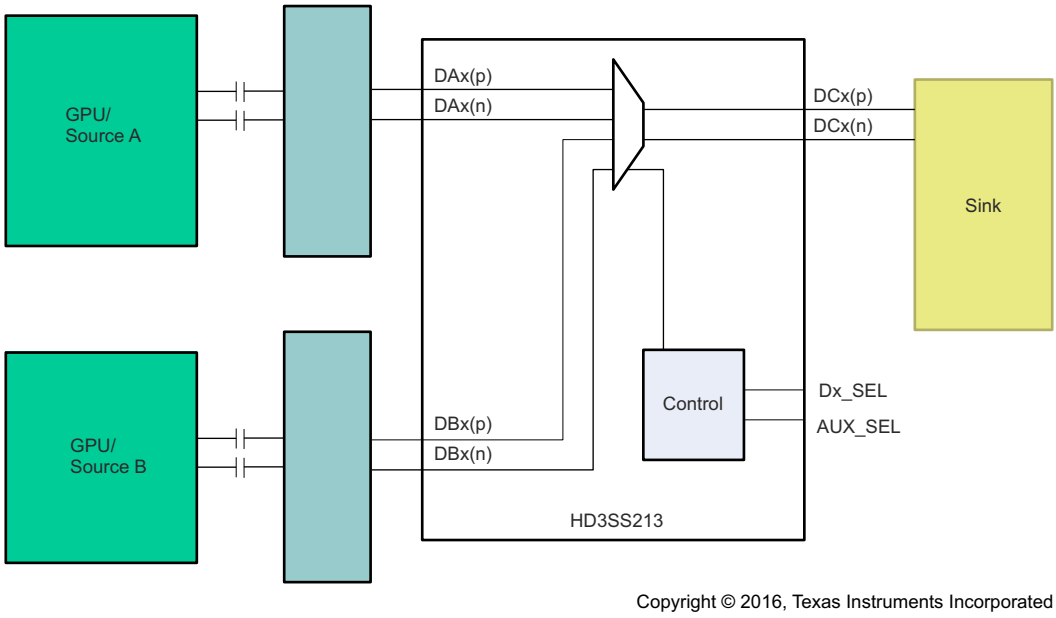

Copyright © 2016, Texas Instruments Incorporated

Figure 8-1. Source Biased by the Sink

In Figure 8-2, the coupling capacitors are placed between the switch and Sink. In this situation, the switch is biased by the Source

Copyright © 2021 Texas Instruments Incorporated

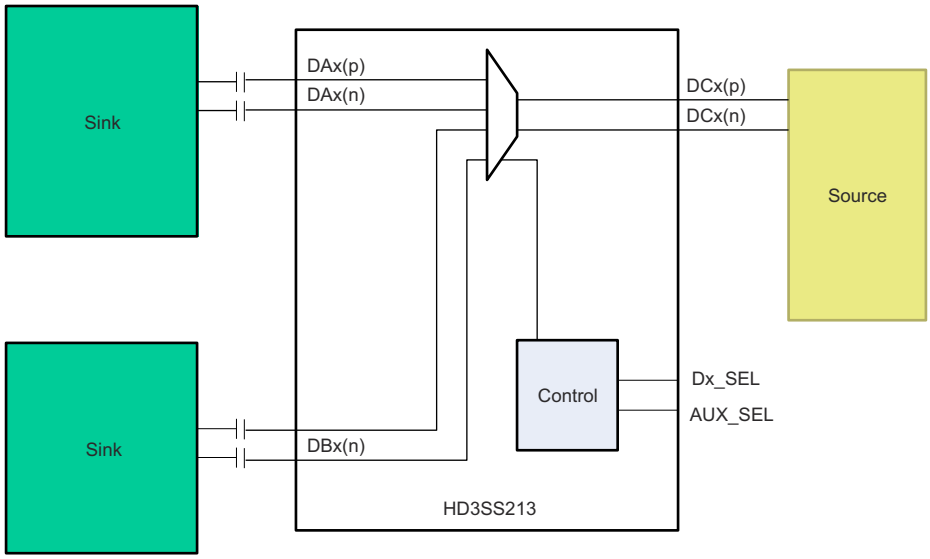

Copyright © 2016, Texas Instruments Incorporated

Figure 8-2. Switch Biased by the Source

8.2 Typical Applications

8.2.1 HD3SS213 AUX Channel in 2:1 Application

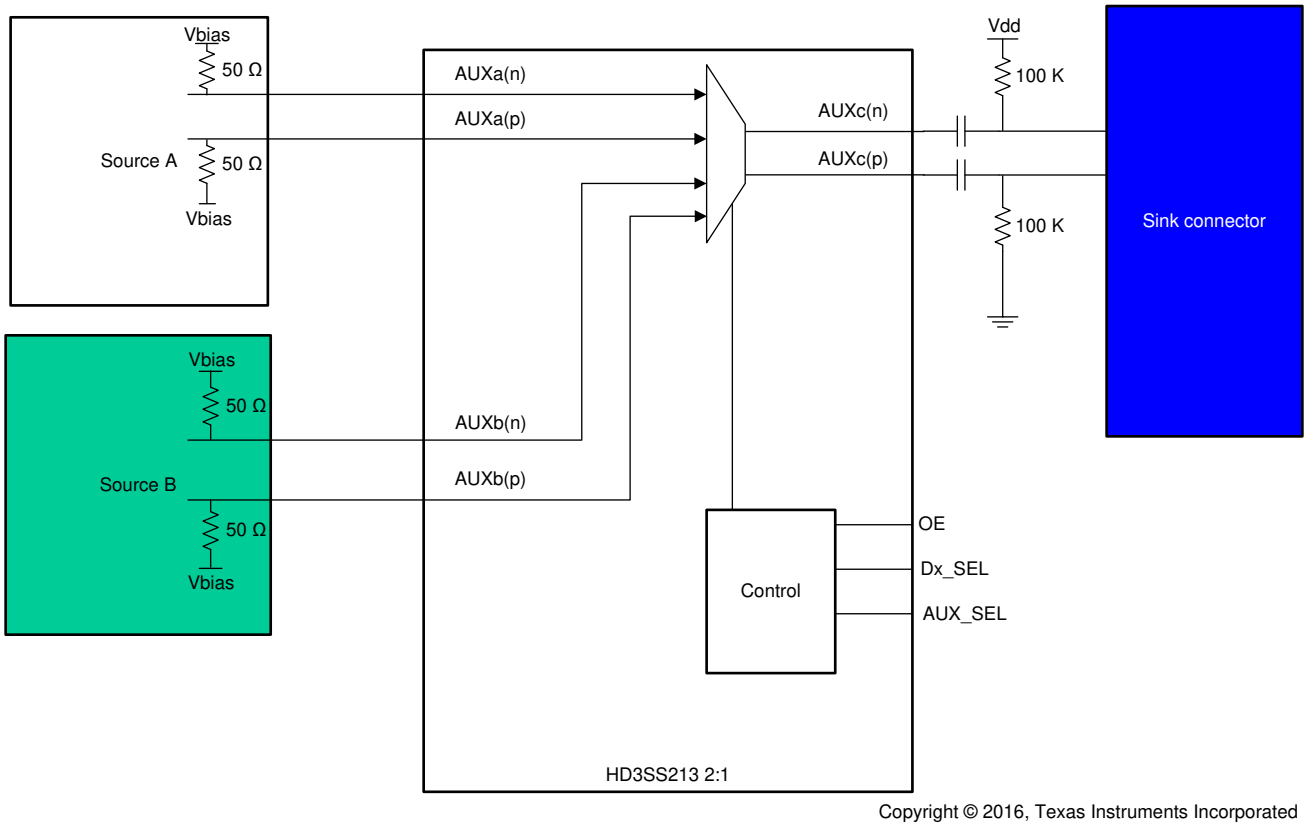

Copyright © 2016, Texas Instruments Incorporated

Figure 8-3. HD3SS213 AUX Channel in 2:1 Application Schematic

8.2.1.1 Design Requirements

Table 8-1 lists the design parameters.

Table 8-1. Design Parameters

PARAMETERS	VALUE
Input voltage	3.3 V
Decoupling capacitors	0.1 µF
AC capacitors(1)	75 nF to 200 nF AC capacitors

(1) DAx, AUXAx, AUXBx and DBx require AC capacitors. N lines require AC capacitors. Alternate mode signals may or may not require AC capacitors.

8.2.1.2 Detailed Design Procedure

- Connect VDD and GND pins to the power and ground planes of the printed-circuit board with 0.1-µF bypass capacitor
- Use VDD/2 logic level at AUX_SEL pin
- Use 3.3-V TTL/CMOS logic level at Dx_SEL to connect DAx to DCx
- Use GND logic level at Dx_SEL to connect DBx to DCx
- Use controlled-impedance transmission media for all the differential signals
- Ensure the received complimentary signals are with a differential amplitude of <1800 mV_{PP} and a common-mode voltage of <2 V

8.2.1.3 Application Curves

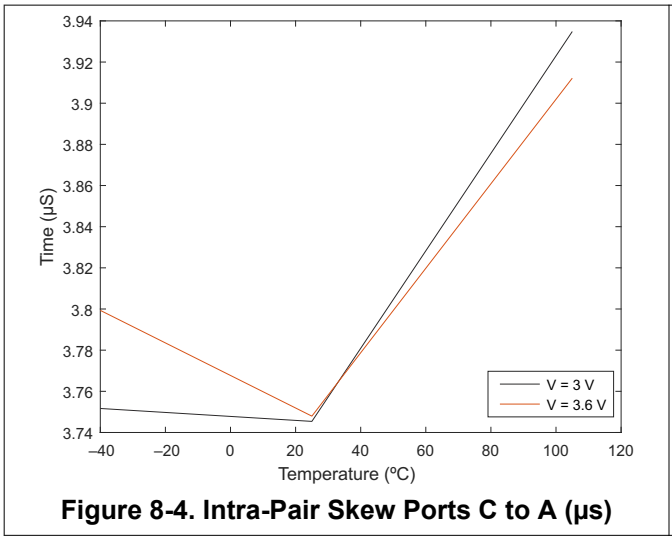

Figure 8-4. Intra-Pair Skew Ports C to A (µs)

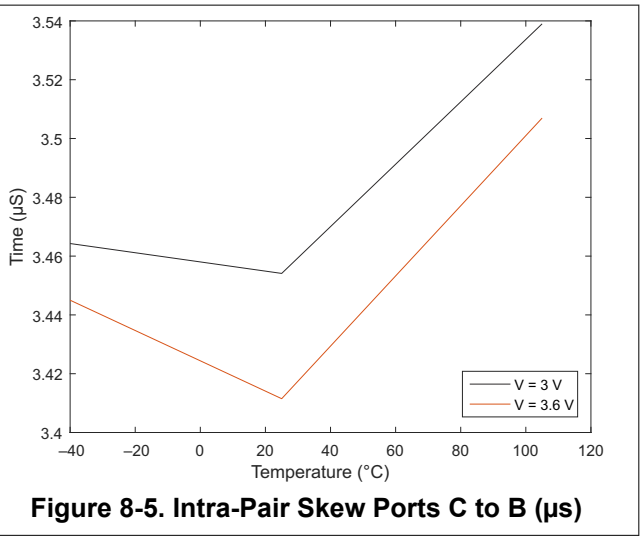

Figure 8-5. Intra-Pair Skew Ports C to B (µs)

Copyright © 2021 Texas Instruments Incorporated

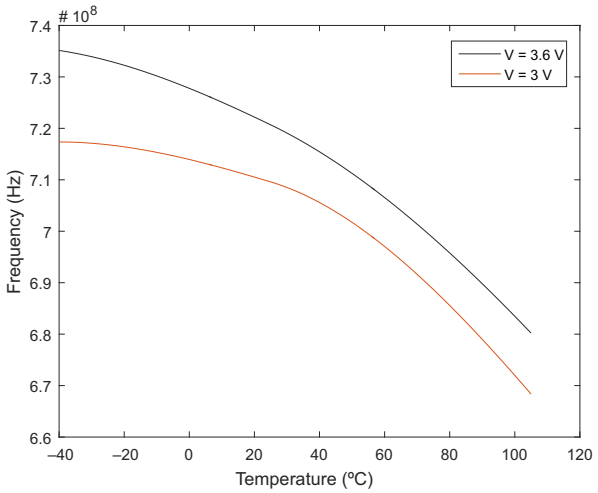

Figure 8-6. Bandwidth Ports AUXc to AUXa

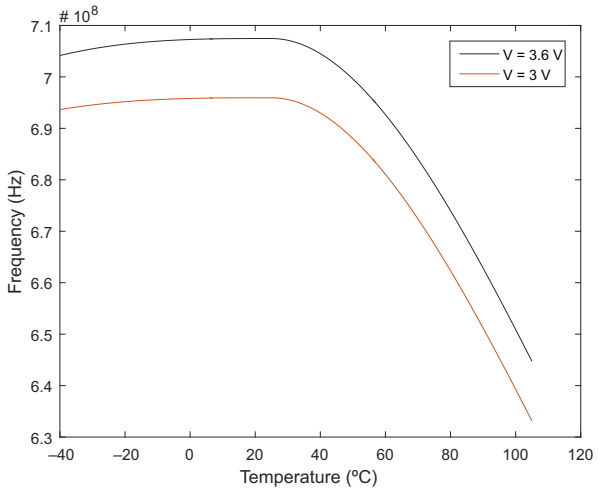

Figure 8-7. Bandwidth Ports AUXc to AUXb

8.2.2 HD3SS213 AUX Channel in 1:2 Application

AUX channel is controlled by AUX_SEL. This pin configures the switch to route the incoming AUX signal to the outgoing AUX path, when AUX_SEL = 0 the AUXA channel is routed to AUXC, when AUX_SEL = 1 the AUXB channel is routed to AUXC.

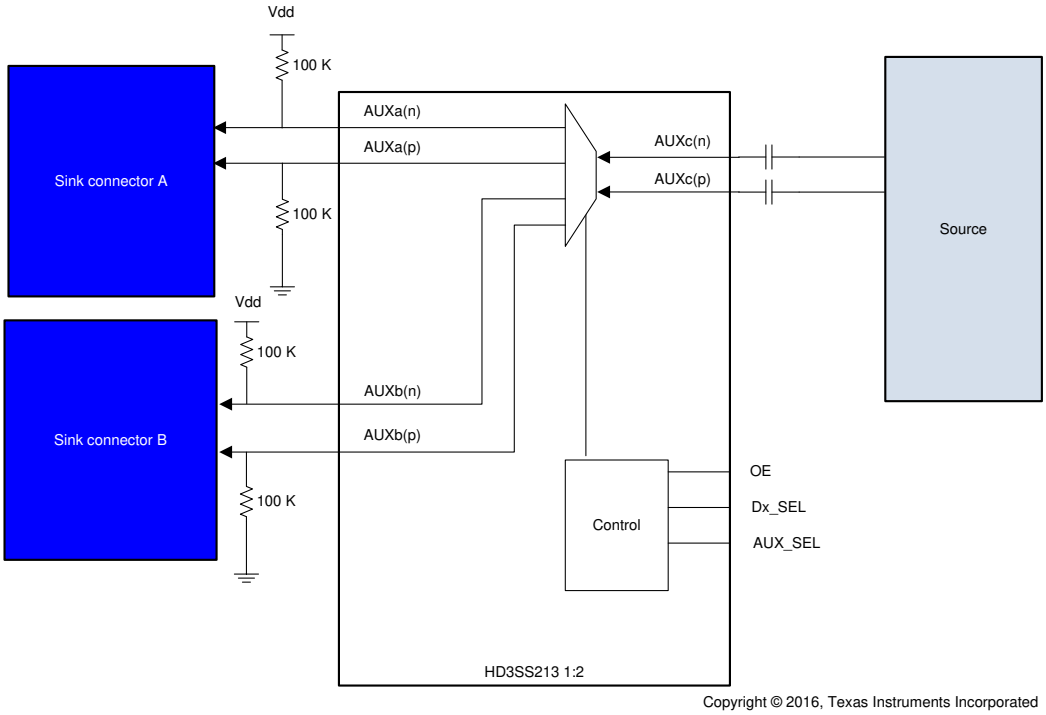

Figure 8-8. HD3SS213 AUX Channel in 1:2 Application Schematic

Power Supply Recommendations

The HD3SS213 requires 3.3 V power sources. 3.3-V supply (VDD) must have 0.1-µF bypass capacitors to VSS (ground) for proper operation. TI recommends one capacitor for each power terminal. Place the capacitor as close as possible to the terminal on the device and keep trace length to a minimum. Smaller value capacitors like 0.01 µF are also recommended on the supply terminals.

Copyright © 2021 Texas Instruments Incorporated

9 Layout

9.1 Layout Guidelines

- Routing the high-speed differential signal traces on the top layer avoids the use of vias (and the introduction of their inductances) and allows for clean interconnects from the DisplayPort connectors to the repeater inputs and from the repeater output to the subsequent receiver circuit.
- Placing a solid ground plane next to the high-speed signal layer establishes controlled impedance for transmission line interconnects and provides an excellent low-inductance path for the return current flow.
- Decoupling capacitors must be placed next to each power terminal on the HD3SS213. Take care to minimize the stub length of the race connecting the capacitor to the power pin.
- Avoid sharing vias between multiple decoupling capacitors.
- Place vias as close as possible to the decoupling capacitor solder pad.
- Widen VDD and/or GND planes to reduce effect if static and dynamic IR drop.

9.1.1 Differential Traces

Guidelines for routing PCB traces are necessary when trying to maintain signal integrity and lower EMI. Although there seems to be an endless number of precautions, this section provides only a few main recommendations as layout guidance.

1. Reduce intra-pair skew in a differential trace by introducing small meandering corrections at the point of mismatch.
2. Reduce inter-pair skew, caused by component placement and IC pinouts, by making larger meandering correction along the signal path. Use chamfered corners with a length-to-trace width ratio of between 3 and 5. The distance between bends must be 8 to 10 times the trace width
3. Use 45° bends instead of right-angle (90°) bends. Right-angle bends increase the effective trace width, which changes the differential trace impedance creating large discontinuities. A 45° bends is seen as a smaller discontinuity.
4. When routing around an object, route both trace of a pair in parallel. Splitting the traces changes the line-to-line spacing, thus causing the differential impedance to change and discontinuities to occur
5. Place passive components within the signal path, such as source-matching resistors or AC coupling capacitors, next to each other. Routing as in case a) creates wider trace spacing than in b). However, the resulting discontinuity is limited to a far narrower area.
6. When routing traces next to a via or between an array of vias, make sure that the via clearance section does not interrupt the path of the return current on the ground plane below
7. Avoid metal layers and traces underneath or between the pads off the DisplayPort connectors for better impedance matching. Otherwise, they cause the differential impedance to drop below 75 Ω and fail the board during TDR testing.
8. Use the smallest size possible for signal trace vias and DisplayPort connector pads as they have less impact on the 100 Ω differential impedance. Large vias and pads can cause the impedance to drop below 85 Ω.
9. Use solid power and ground planes for 100 Ω impedance control and minimum power noise.
10. For 100 Ω differential impedance use the smallest trace spacing possible, which is usually specified by the PCB vendor.
11. Keep the trace length between the DisplayPort connector and the DisplayPort device as short as possible to minimize attenuation.
12. Use good DisplayPort connectors whose impedances meet the specifications.
13. Place bulk capacitors (for example, 10 µF) close to power sources, such as voltage regulators or where the power is supplied to the PCB.
14. Place smaller 0.1-µF or 0.01-µF capacitors at the device.

Copyright © 2021 Texas Instruments Incorporated

9.2 Layout Example

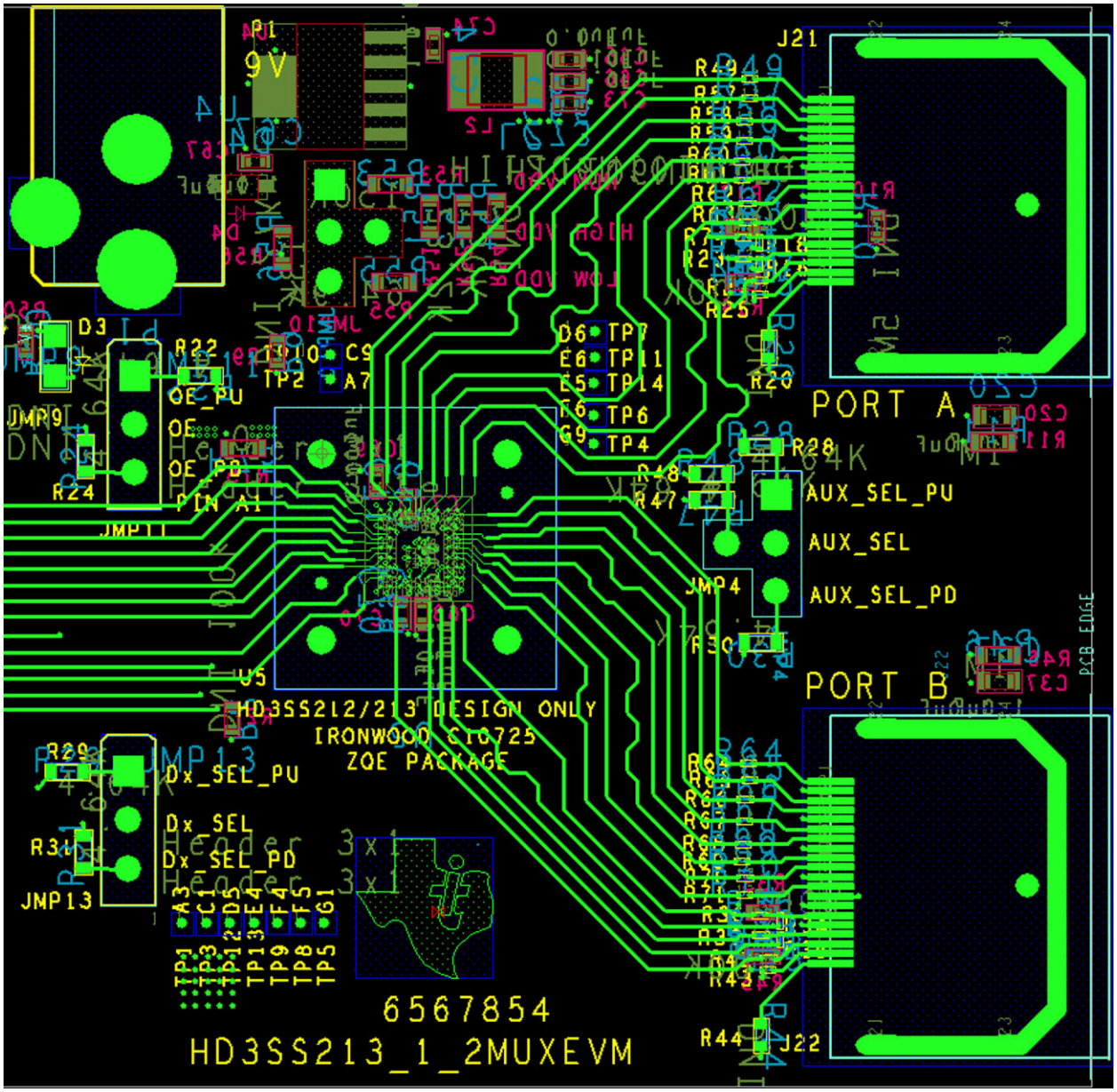

Copyright © 2016, Texas Instruments Incorporated

Figure 9-1. HD3SS213 Layout Example

10 Device and Documentation Support

10.1 Receiving Notification of Documentation Updates

To receive notification of documentation updates, navigate to the device product folder on ti.com. Click on *Subscribe to updates* to register and receive a weekly digest of any product information that has changed. For change details, review the revision history included in any revised document.

10.2 Support Resources

TI E2E™ support forums are an engineer's go-to source for fast, verified answers and design help — straight from the experts. Search existing answers or ask your own question to get the quick design help you need.

Linked content is provided "AS IS" by the respective contributors. They do not constitute TI specifications and do not necessarily reflect TI's views; see TI's Terms of Use.

10.3 Trademarks

TI E2E™ is a trademark of Texas Instruments.
All trademarks are the property of their respective owners.

10.4 Electrostatic Discharge Caution



This integrated circuit can be damaged by ESD. Texas Instruments recommends that all integrated circuits be handled with appropriate precautions. Failure to observe proper handling and installation procedures can cause damage.

ESD damage can range from subtle performance degradation to complete device failure. Precision integrated circuits may be more susceptible to damage because very small parametric changes could cause the device not to meet its published specifications.

10.5 Glossary

TI Glossary This glossary lists and explains terms, acronyms, and definitions.

11 Mechanical, Packaging, and Orderable Information

The following pages include mechanical, packaging, and orderable information. This information is the most current data available for the designated devices. This data is subject to change without notice and revision of this document. For browser-based versions of this data sheet, refer to the left-hand navigation.

Copyright © 2021 Texas Instruments Incorporated

PACKAGING INFORMATION

Orderable Device	Status (1)	Package Type	Package Drawing	Pins	Package Qty	Eco Plan (2)	Lead finish/ Ball material (6)	MSL Peak Temp (3)	Op Temp (°C)	Device Marking (4/5)	Samples
HD3SS213ZQER	LIFEBUY	BGA MICROSTAR JUNIOR	ZQE	50	2500	RoHS & Green	SNAGCU	Level-3-260C-168 HR	-40 to 105	HD3SS213	
HD3SS213ZXHR	ACTIVE	NFBGA	ZXH	50	2500	RoHS & Green	SNAGCU	Level-3-260C-168 HR		HD3SS213	Samples

(1) The marketing status values are defined as follows:
ACTIVE: Product device recommended for new designs.
LIFEBUY: TI has announced that the device will be discontinued, and a lifetime-buy period is in effect.
NRND: Not recommended for new designs. Device is in production to support existing customers, but TI does not recommend using this part in a new design.
PREVIEW: Device has been announced but is not in production. Samples may or may not be available.
OBSOLETE: TI has discontinued the production of the device.

(2) **RoHS:** TI defines "RoHS" to mean semiconductor products that are compliant with the current EU RoHS requirements for all 10 RoHS substances, including the requirement that RoHS substance do not exceed 0.1% by weight in homogeneous materials. Where designed to be soldered at high temperatures, "RoHS" products are suitable for use in specified lead-free processes. TI may reference these types of products as "Pb-Free".
RoHS Exempt: TI defines "RoHS Exempt" to mean products that contain lead but are compliant with EU RoHS pursuant to a specific EU RoHS exemption.
Green: TI defines "Green" to mean the content of Chlorine (Cl) and Bromine (Br) based flame retardants meet JS709B low halogen requirements of <=1000ppm threshold. Antimony trioxide based flame retardants must also meet the <=1000ppm threshold requirement.

(3) MSL, Peak Temp. - The Moisture Sensitivity Level rating according to the JEDEC industry standard classifications, and peak solder temperature.

(4) There may be additional marking, which relates to the logo, the lot trace code information, or the environmental category on the device.

(5) Multiple Device Markings will be inside parentheses. Only one Device Marking contained in parentheses and separated by a "~" will appear on a device. If a line is indented then it is a continuation of the previous line and the two combined represent the entire Device Marking for that device.

(6) Lead finish/Ball material - Orderable Devices may have multiple material finish options. Finish options are separated by a vertical ruled line. Lead finish/Ball material values may wrap to two lines if the finish value exceeds the maximum column width.

Important Information and Disclaimer: The information provided on this page represents TI's knowledge and belief as of the date that it is provided. TI bases its knowledge and belief on information provided by third parties, and makes no representation or warranty as to the accuracy of such information. Efforts are underway to better integrate information from third parties. TI has taken and continues to take reasonable steps to provide representative and accurate information but may not have conducted destructive testing or chemical analysis on incoming materials and chemicals. TI and TI suppliers consider certain information to be proprietary, and thus CAS numbers and other limited information may not be available for release.

In no event shall TI's liability arising out of such information exceed the total purchase price of the TI part(s) at issue in this document sold by TI to Customer on an annual basis.

TAPE AND REEL INFORMATION

REEL DIMENSIONS

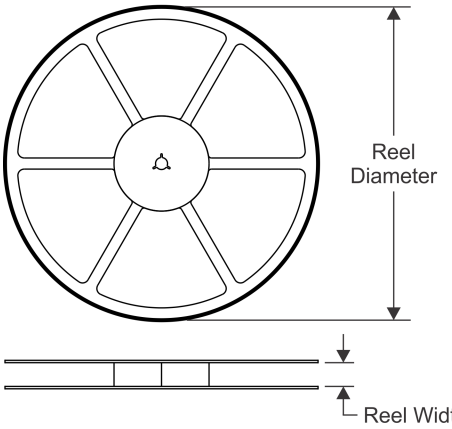

TAPE DIMENSIONS

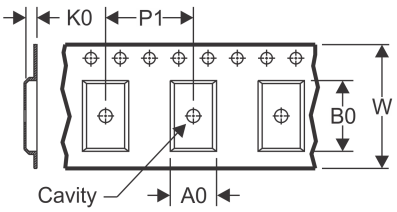

A0	Dimension designed to accommodate the component width
B0	Dimension designed to accommodate the component length
K0	Dimension designed to accommodate the component thickness
W	Overall width of the carrier tape
P1	Pitch between successive cavity centers

QUADRANT ASSIGNMENTS FOR PIN 1 ORIENTATION IN TAPE

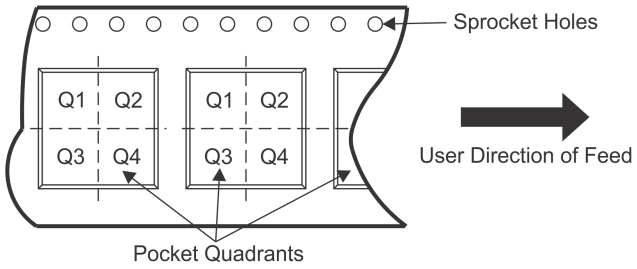

*All dimensions are nominal

Device	Package Type	Package Drawing	Pins	SPQ	Reel Diameter (mm)	Reel Width W1 (mm)	A0 (mm)	B0 (mm)	K0 (mm)	P1 (mm)	W (mm)	Pin1 Quadrant
HD3SS213ZQER	BGA MICROSTAR JUNIOR	ZQE	50	2500	330.0	12.4	5.3	5.3	1.5	8.0	12.0	Q1
HD3SS213ZXHR	NFBGA	ZXH	50	2500	330.0	12.4	5.3	5.3	1.5	8.0	12.0	Q1

TAPE AND REEL BOX DIMENSIONS

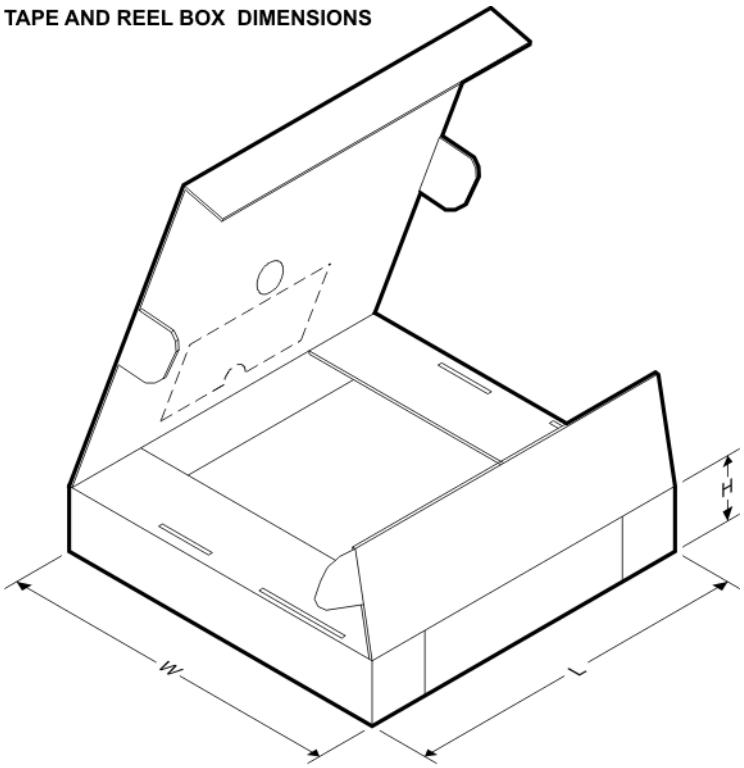

*All dimensions are nominal

Device	Package Type	Package Drawing	Pins	SPQ	Length (mm)	Width (mm)	Height (mm)
HD3SS213ZQER	BGA MICROSTAR JUNIOR	ZQE	50	2500	336.6	336.6	31.8
HD3SS213ZXHR	NFBGA	ZXH	50	2500	336.6	336.6	31.8

PACKAGE OUTLINE

ZQE0050A

BGA MicroStar Jr ™ - 1 mm max height

PLASTIC BALL GRID ARRAY

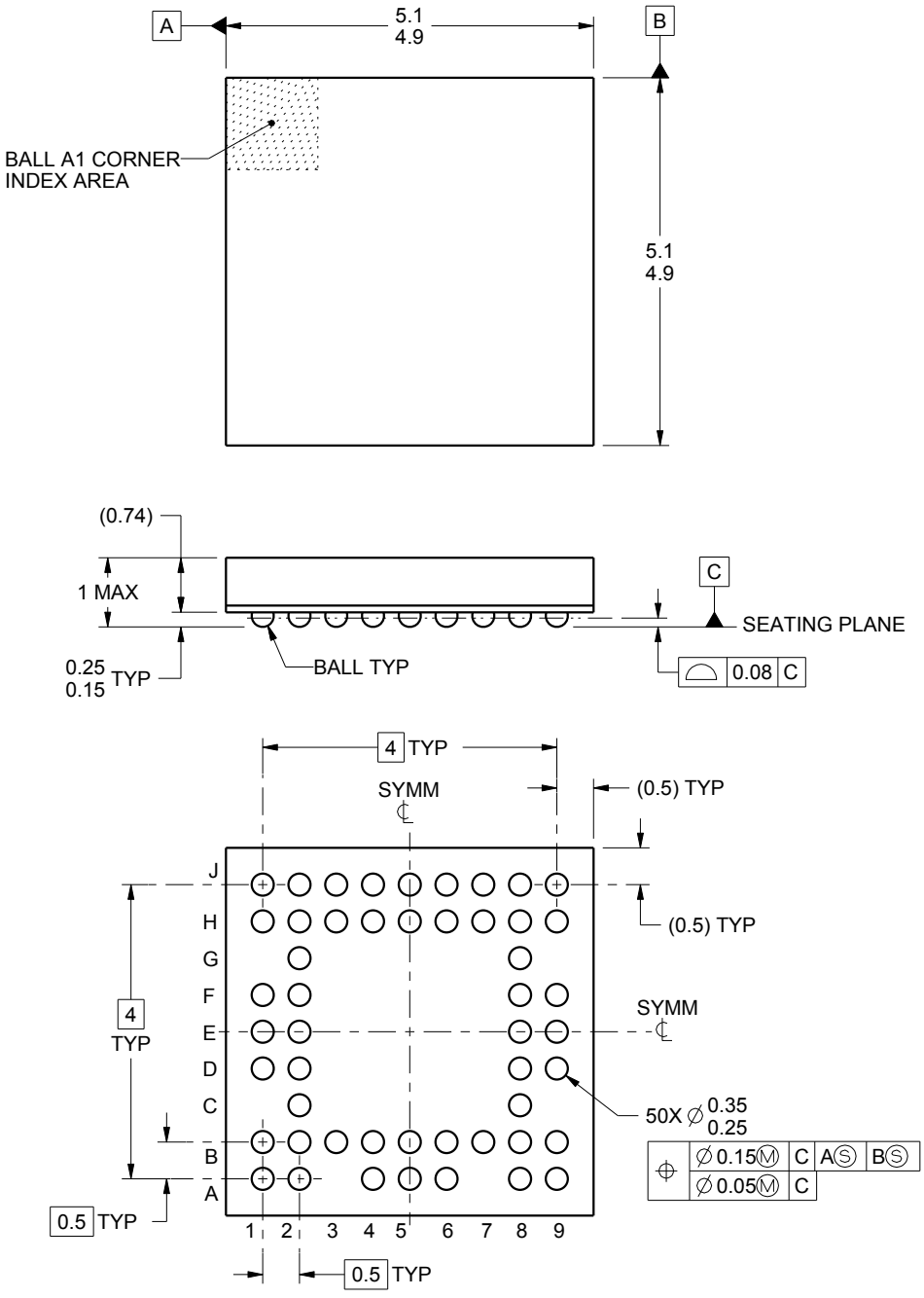

4221625/A 02/2015

MicroStar Junior is trademark of Texas Instruments.

NOTES:

1. All linear dimensions are in millimeters. Any dimensions in parenthesis are for reference only. Dimensioning and tolerancing per ASME Y14.5M.
2. This drawing is subject to change without notice.
3. Reference JEDEC registration MO-225.

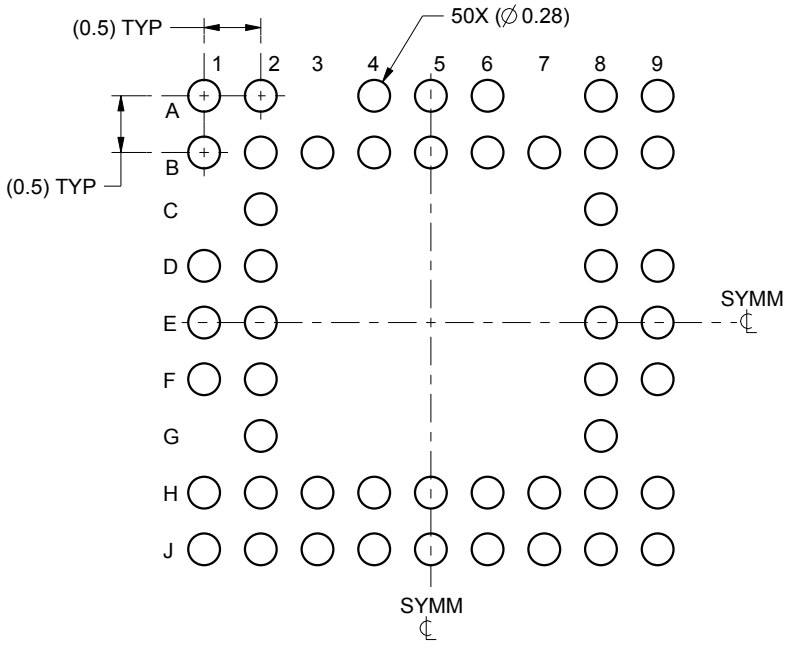

LAND PATTERN EXAMPLE
SCALE:15X

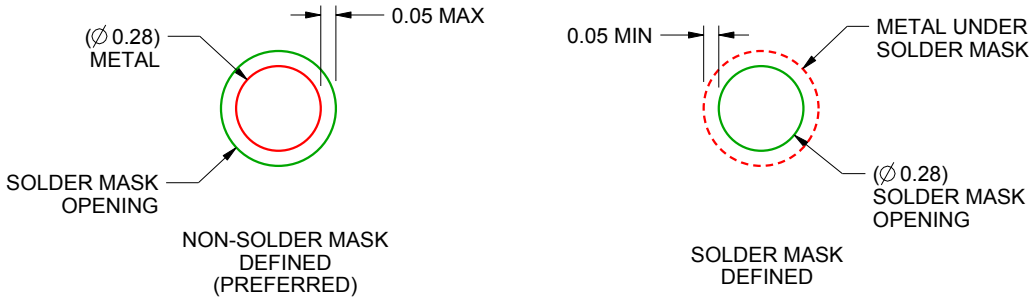

SOLDER MASK DETAILS
NOT TO SCALE

4221625/A 02/2015

NOTES: (continued)

4. Final dimensions may vary due to manufacturing tolerance considerations and also routing constraints.
For information, see Texas Instruments literature number SSYZ015 (www.ti.com/lit/ssyz015).

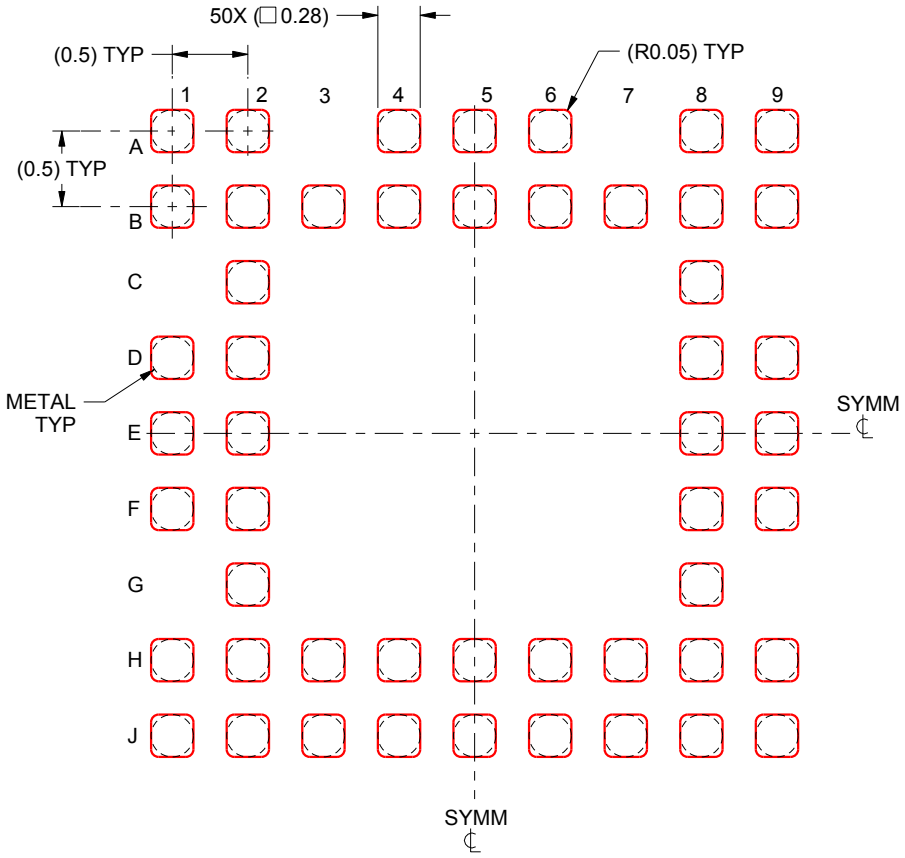

SOLDER PASTE EXAMPLE
BASED ON 0.1 mm THICK STENCIL
SCALE:20X

4221625/A 02/2015

NOTES: (continued)

5. Laser cutting apertures with trapezoidal walls and rounded corners may offer better paste release.

PLASTIC BALL GRID ARRAY

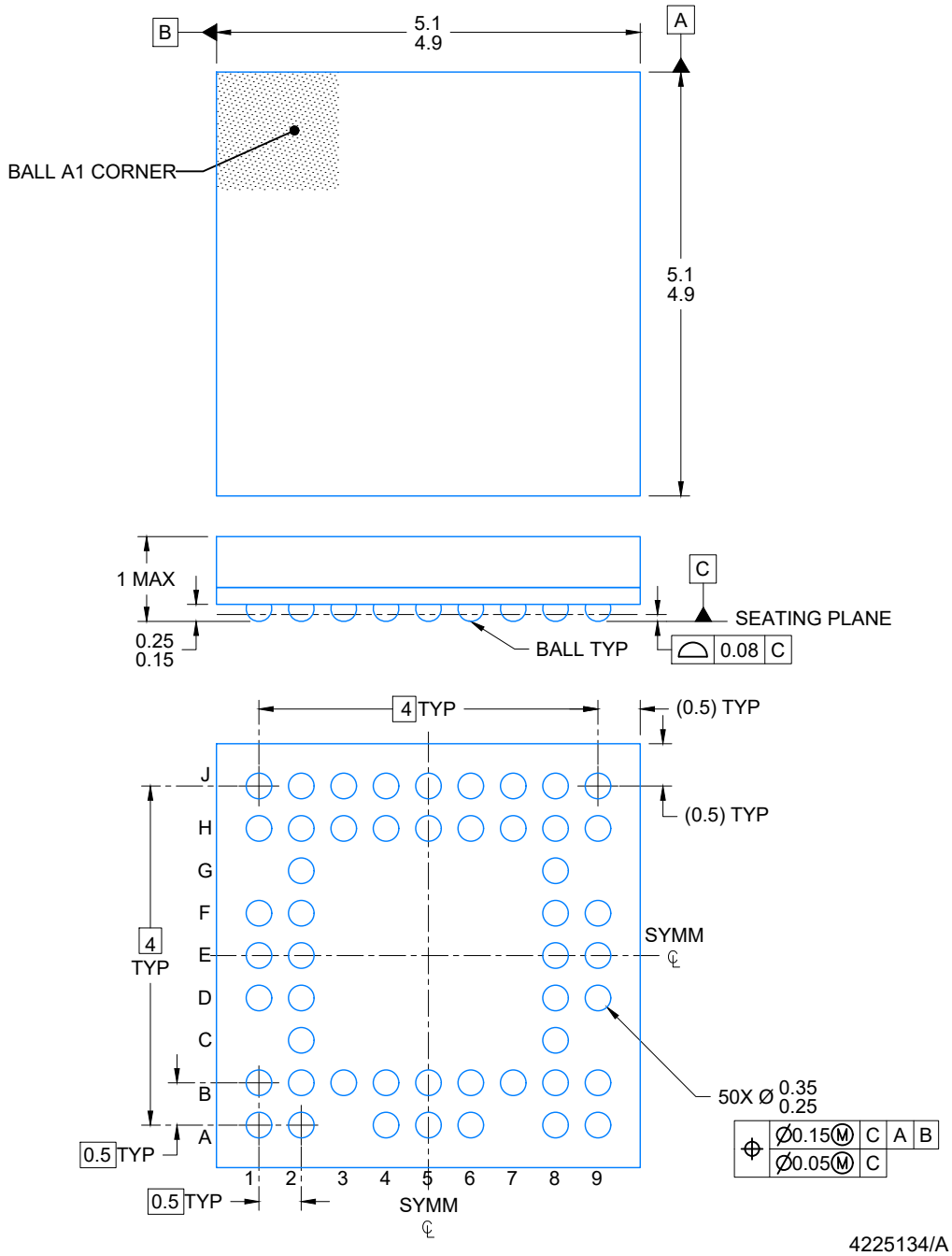

NOTES:

NanoFree is a trademark of Texas Instruments.

1. All linear dimensions are in millimeters. Any dimensions in parenthesis are for reference only. Dimensioning and tolerancing per ASME Y14.5M.
2. This drawing is subject to change without notice.

EXAMPLE BOARD LAYOUT

NFBGA - 1 mm max height

PLASTIC BALL GRID ARRAY

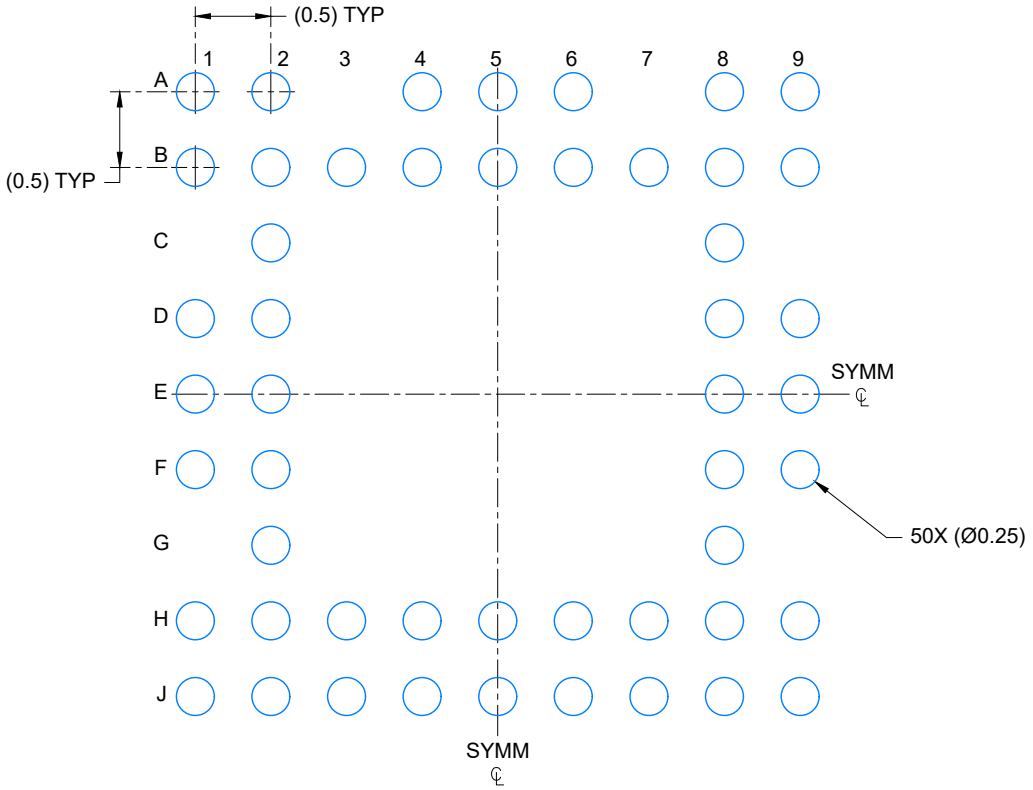

LAND PATTERN EXAMPLE
SCALE: 20X

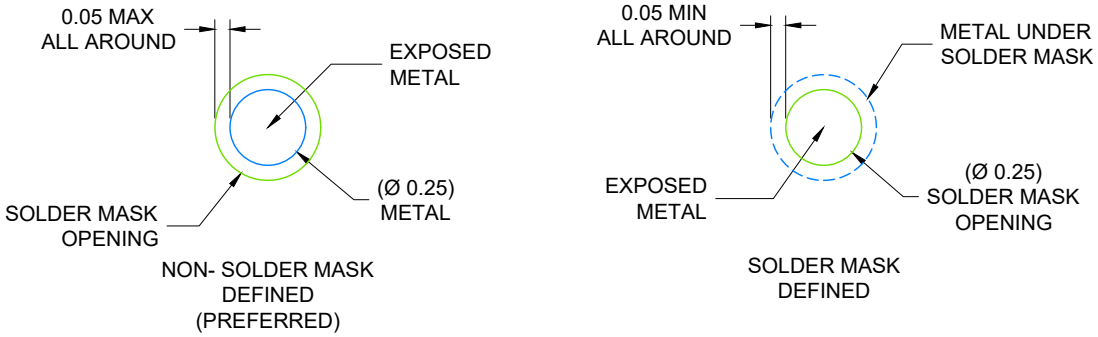

SOLDER MASK DETAILS
NOT TO SCALE

4225134/A 08/2019

NOTES: (continued)

3. Final dimensions may vary due to manufacturing tolerance considerations and also routing constraints. Refer to Texas Instruments Literature number SNVA009 (www.ti.com/lit/snva009).

EXAMPLE STENCIL DESIGN

NFBGA - 1 mm max height

PLASTIC BALL GRID ARRAY

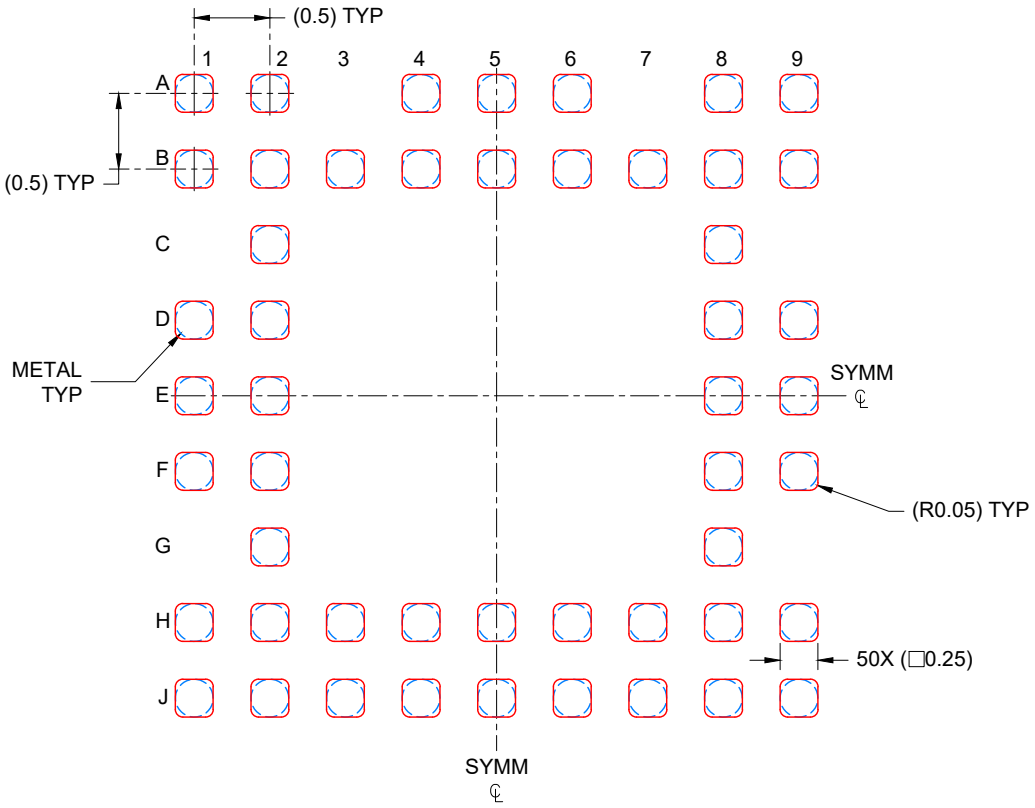

SOLDER PASTE EXAMPLE
BASED ON 0.100 mm THICK STENCIL
SCALE: 20X

4225134/A 08/2019

NOTES: (continued)

4. Laser cutting apertures with trapezoidal walls and rounded corners may offer better paste release.

IMPORTANT NOTICE AND DISCLAIMER

TI PROVIDES TECHNICAL AND RELIABILITY DATA (INCLUDING DATASHEETS), DESIGN RESOURCES (INCLUDING REFERENCE DESIGNS), APPLICATION OR OTHER DESIGN ADVICE, WEB TOOLS, SAFETY INFORMATION, AND OTHER RESOURCES “AS IS” AND WITH ALL FAULTS, AND DISCLAIMS ALL WARRANTIES, EXPRESS AND IMPLIED, INCLUDING WITHOUT LIMITATION ANY IMPLIED WARRANTIES OF MERCHANTABILITY, FITNESS FOR A PARTICULAR PURPOSE OR NON-INFRINGEMENT OF THIRD PARTY INTELLECTUAL PROPERTY RIGHTS.

These resources are intended for skilled developers designing with TI products. You are solely responsible for (1) selecting the appropriate TI products for your application, (2) designing, validating and testing your application, and (3) ensuring your application meets applicable standards, and any other safety, security, or other requirements. These resources are subject to change without notice. TI grants you permission to use these resources only for development of an application that uses the TI products described in the resource. Other reproduction and display of these resources is prohibited. No license is granted to any other TI intellectual property right or to any third party intellectual property right. TI disclaims responsibility for, and you will fully indemnify TI and its representatives against, any claims, damages, costs, losses, and liabilities arising out of your use of these resources.

TI’s products are provided subject to TI’s Terms of Sale (https:www.ti.com/legal/termsofsale.html) or other applicable terms available either on ti.com or provided in conjunction with such TI products. TI’s provision of these resources does not expand or otherwise alter TI’s applicable warranties or warranty disclaimers for TI products.

Mailing Address: Texas Instruments, Post Office Box 655303, Dallas, Texas 75265
Copyright © 2021, Texas Instruments Incorporated