Quadruple D-type Flip Flop

The HD14175B is quad type D flip-flop. Each of the four flip-flops is positive-edge triggered by a common clock input (C). An active-low reset input ($\overline{R}$) asynchronously resets all flip-flops. Each flip-flop has independent Data (D) inputs and complementary outputs (Q and $\overline{Q}$). This device may be used as shift register elements or as type T flip-flops for counter and toggle applications.

■ FEATURES

- Supply Voltage Range = 3 to 18V
- Output Compatible with One Low-power Schottky TTL Load
- Functional Equivalent to TTL74175

■ BLOCK DIAGRAM

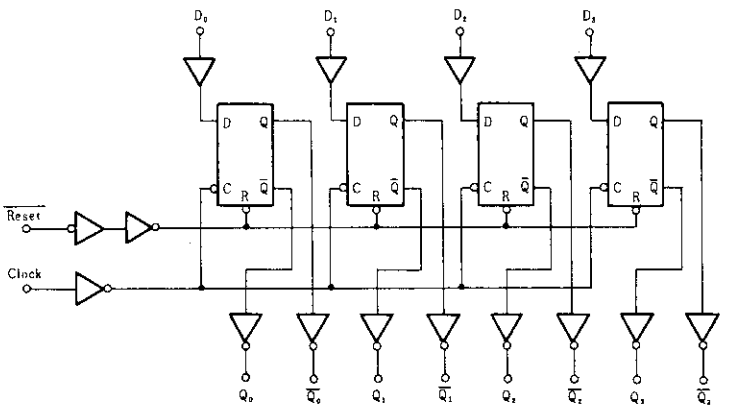

■ DYNAMIC SIGNAL WAVEFORMS

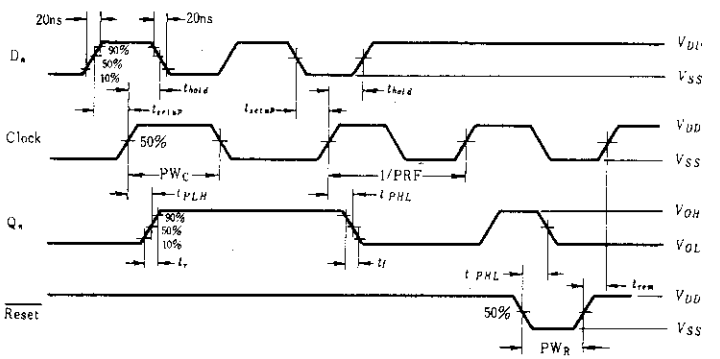

■ PIN ARRANGEMENT

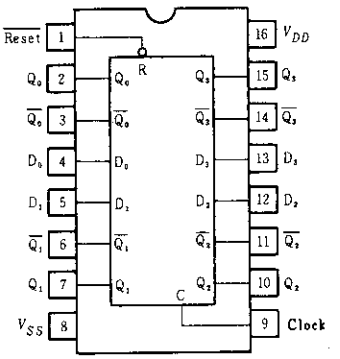

(Top View)

■ TRUTH TABLE

Inputs			Output	
Clock	Data	$\overline{\text{Reset}}$	Q	$\overline{Q}$
↑	0	1	0	1
↑	1	1	1	0
↓	×	1	Q	$\overline{Q}$
×	×	0	0	1

× = Don't Care

■ELECTRICAL CHARACTERISTICS

Characteristic	Symbol	V_{DD}(V)	Test Conditions	−40°C min	−40°C max	25°C min	25°C typ	25°C max	85°C min	85°C max	Unit
Output Voltage	V_{OL}	5.0	$V_{in}=V_{DD}$ or 0	−	0.05	−	0	0.05	−	0.05	V
		10		−	0.05	−	0	0.05	−	0.05	
		15		−	0.05	−	0	0.05	−	0.05	
	V_{OH}	5.0	$V_{in}=0$ or V_{DD}	4.95	−	4.95	5.0	−	4.95	−	V
		10		9.95	−	9.95	10	−	9.95	−	
		15		14.95	−	14.95	15	−	14.95	−	
Input Voltage	V_{IL}	5.0	$V_{out}=4.5$ or 0.5V	−	1.5	−	2.25	1.5	−	1.5	V
		10	$V_{out}=9.0$ or 1.0V	−	3.0	−	4.50	3.0	−	3.0	
		15	$V_{out}=13.5$ or 1.5V	−	4.0	−	6.75	4.0	−	4.0	
	V_{IH}	5.0	$V_{out}=0.5$ or 4.5V	3.5	−	3.5	2.75	−	3.5	−	V
		10	$V_{out}=1.0$ or 9.0V	7.0	−	7.0	5.50	−	7.0	−	
		15	$V_{out}=1.5$ or 13.5V	11.0	−	11.0	8.25	−	11.0	−	
Output Drive Current	I_{OH}	5.0	$V_{OH}=2.5$V	−2.5	−	−2.1	−4.2	−	−1.7	−	mA
		5.0	$V_{OH}=4.6$V	−0.52	−	−0.44	−0.88	−	−0.36	−	
		10	$V_{OH}=9.5$V	−1.3	−	−1.1	−2.25	−	−0.9	−	
		15	$V_{OH}=13.5$V	−3.6	−	−3.0	−8.8	−	−2.4	−	
	I_{OL}	5.0	$V_{OL}=0.4$V	0.52	−	0.44	0.88	−	0.36	−	mA
		10	$V_{OL}=0.5$V	1.3	−	1.1	2.25	−	0.9	−	
		15	$V_{OL}=1.5$V	3.6	−	3.0	8.8	−	2.4	−	
Input Current	I_{in}	15		−	±0.3	−	±0.00001	±0.3	−	±1.0	μA
Input Capacitance	C_{in}	−	$V_{in}=0$	−	−	−	5.0	7.5	−	−	pF
Quiescent Current	I_{DD}	5.0	Zero Signal, per Package	−	20	−	0.0005	20	−	150	μA
		10		−	40	−	0.0010	40	−	300	
		15		−	80	−	0.0015	80	−	600	
Total Supply Current*	I_T	5.0	Dynamic $+I_{DD}$, $C_L=50$pF $f=1$kHz per Gate	−	−	−	1.7	−	−	−	μA
		10		−	−	−	3.4	−	−	−	
		15		−	−	−	5.0	−	−	−	

* To calculate total supply current at frequency other than 1kHz.
@ $V_{DD}=5.0$V $I_T=(1.7\,\mu A/kHz)f+I_{DD}$ @ $V_{DD}=10$V $I_T=(3.4\,\mu A/kHz)f+I_{DD}$ @ $V_{DD}=15$V $I_T=(5.0\,\mu A/kHz)f+I_{DD}$

■ SWITCHING CHARACTERICS (C_L=50pF, Ta=25°C)

Characteristic		Symbol	V_{DD}(V)	min	typ	max	Unit
Output Rise and Fall Time		t_r, t_f	5.0	–	100	200	ns
			10	–	50	100	
			15	–	40	80	
Propagation Delay Time	Clock	t_{PLH}, t_{PHL}	5.0	–	220	420	ns
			10	–	90	170	
			15	–	70	130	
	$\overline{\text{Reset}}$	t_{PHL}	5.0	–	325	650	ns
			10	–	130	260	
			15	–	100	200	
Clock Pulse Width		PW_C	5.0	250	110	–	ns
			10	100	45	–	
			15	75	35	–	
Reset Pulse Width		PW_R	5.0	200	100	–	ns
			10	80	40	–	
			15	60	30	–	
Clock Frequency		PRF	5.0	–	4.5	2.0	MHz
			10	–	11	5.0	
			15	–	14	6.5	
Clock Pulse Rise and Fall Time		t_r, t_f	5.0	–	–	15	μs
			10	–	–	15	
			15	–	–	15	
Setup Time		t_{setup}	5.0	120	60	–	ns
			10	50	25	–	
			15	40	20	–	
Hold Time		t_{hold}	5.0	80	40	–	ns
			10	40	20	–	
			15	30	15	–	
Reset Removal Time		t_{rem}	5.0	250	125	–	ns
			10	100	50	–	
			15	80	40	–	

* The reset signal must be high prior to a positive-going transition of the clock.

Unit: mm

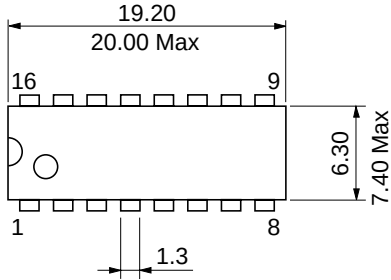

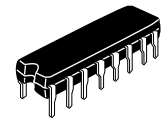

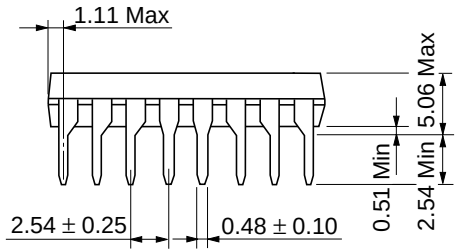

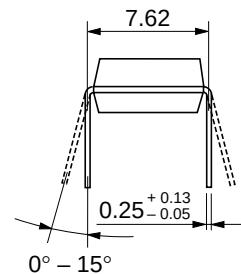

Hitachi Code	DP-16
JEDEC	Conforms
EIAJ	Conforms
Weight (reference value)	1.07 g

Cautions

1. Hitachi neither warrants nor grants licenses of any rights of Hitachi's or any third party's patent, copyright, trademark, or other intellectual property rights for information contained in this document. Hitachi bears no responsibility for problems that may arise with third party's rights, including intellectual property rights, in connection with use of the information contained in this document.
2. Products and product specifications may be subject to change without notice. Confirm that you have received the latest product standards or specifications before final design, purchase or use.
3. Hitachi makes every attempt to ensure that its products are of high quality and reliability. However, contact Hitachi's sales office before using the product in an application that demands especially high quality and reliability or where its failure or malfunction may directly threaten human life or cause risk of bodily injury, such as aerospace, aeronautics, nuclear power, combustion control, transportation, traffic, safety equipment or medical equipment for life support.
4. Design your application so that the product is used within the ranges guaranteed by Hitachi particularly for maximum rating, operating supply voltage range, heat radiation characteristics, installation conditions and other characteristics. Hitachi bears no responsibility for failure or damage when used beyond the guaranteed ranges. Even within the guaranteed ranges, consider normally foreseeable failure rates or failure modes in semiconductor devices and employ systemic measures such as fail-safes, so that the equipment incorporating Hitachi product does not cause bodily injury, fire or other consequential damage due to operation of the Hitachi product.
5. This product is not designed to be radiation resistant.
6. No one is permitted to reproduce or duplicate, in any form, the whole or part of this document without written approval from Hitachi.
7. Contact Hitachi's sales office for any questions regarding this document or Hitachi semiconductor products.

HITACHI

Hitachi, Ltd.
Semiconductor & Integrated Circuits.
Nippon Bldg., 2-6-2, Ohte-machi, Chiyoda-ku, Tokyo 100-0004, Japan
Tel: Tokyo (03) 3270-2111 Fax: (03) 3270-5109

URL
NorthAmerica : http:semiconductor.hitachi.com/
Europe : http://www.hitachi-eu.com/hel/ecg
Asia (Singapore) : http://www.has.hitachi.com.sg/grp3/sicd/index.htm
Asia (Taiwan) : http://www.hitachi.com.tw/E/Product/SICD_Frame.htm
Asia (HongKong) : http://www.hitachi.com.hk/eng/bo/grp3/index.htm
Japan : http://www.hitachi.co.jp/Sicd/indx.htm

For further information write to:

Hitachi Semiconductor
(America) Inc.
179 East Tasman Drive,
San Jose,CA 95134
Tel: <1> (408) 433-1990
Fax: <1>(408) 433-0223

Hitachi Europe GmbH
Electronic components Group
Dornacher Straße 3
D-85622 Feldkirchen, Munich
Germany
Tel: <49> (89) 9 9180-0
Fax: <49> (89) 9 29 30 00

Hitachi Europe Ltd.
Electronic Components Group.
Whitebrook Park
Lower Cookham Road
Maidenhead
Berkshire SL6 8YA, United Kingdom
Tel: <44> (1628) 585000
Fax: <44> (1628) 778322

Hitachi Asia Pte. Ltd.
16 Collyer Quay #20-00
Hitachi Tower
Singapore 049318
Tel: 535-2100
Fax: 535-1533

Hitachi Asia Ltd.
Taipei Branch Office
3F, Hung Kuo Building. No.167,
Tun-Hwa North Road, Taipei (105)
Tel: <886> (2) 2718-3666
Fax: <886> (2) 2718-8180

Hitachi Asia (Hong Kong) Ltd.
Group III (Electronic Components)
7/F., North Tower, World Finance Centre,
Harbour City, Canton Road, Tsim Sha Tsui,
Kowloon, Hong Kong
Tel: <852> (2) 735 9218
Fax: <852> (2) 730 0281
Telex: 40815 HITEC HX

Copyright ' Hitachi, Ltd., 1999. All rights reserved. Printed in Japan.