HCX-4SB(27MHz)

SMD Quartz Crystal Resonator

1. QUARTZ CRYSTAL UNIT SPECIFICATION

Item	Symbol	Specifications				Remark
		Min	Type	Max	Units	
1. Production type		**SMD Quartz Crystal Resonator**				
2. Holder		**SMD 4025**				Seam Seal
3. Mode of oscillation		■ **Fundamental** □ 3 Overtone □ 5 Overtone				
4. Frequency	FL		**27.000000**		MHz	
5. Load capacitance	CL		**20**		pF	
6. Frequency tolerance	Tol		**± 20**		ppm	at 25℃ ± 3℃
7. Equivalent resistance	Rs		**50**		Ω	Max.
8. Working temperature range	TR		**-10 ～ 70**		℃	
9. Freq. Temp. Characteristics	TC		**± 20**		ppm	working temperature ΔF
10. Drive level	DL		**100**		μW	
11. Shunt Capacitance	C0		**5**		pF	
12. Storage temperature range			**-40 ～ 85**		℃	
13. Insulation resistance			**500**		MΩ	Min.
14. Measure Circuit			**S&A 250B**			π network
15. Aging			**5**		ppm/Yr	Max.

※ **This product doesn't include harmful substance that stipulated by RoHS**

2. MARKING & DIMENSIONS

2.1 DIMENSIONS (Unit: mm)

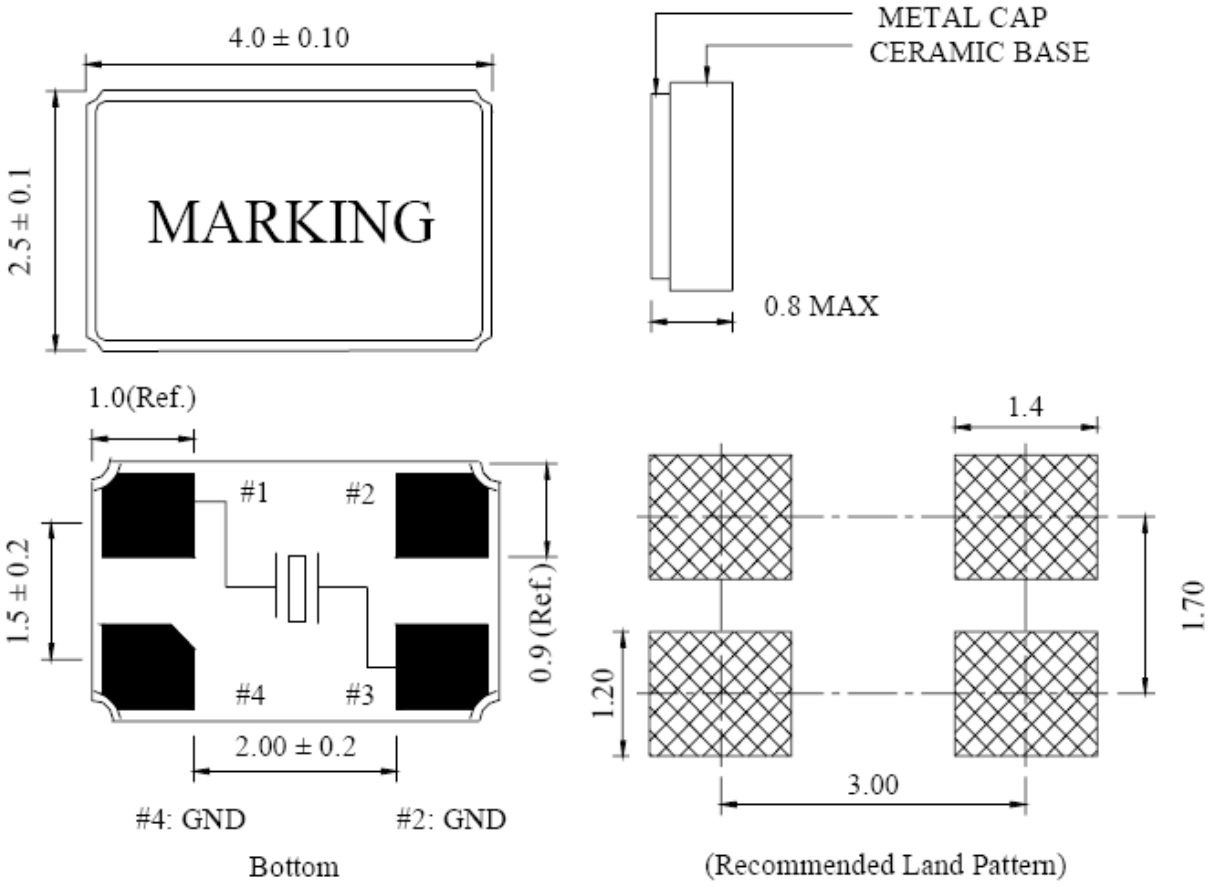

2.2 INSIDE STRUCTURE

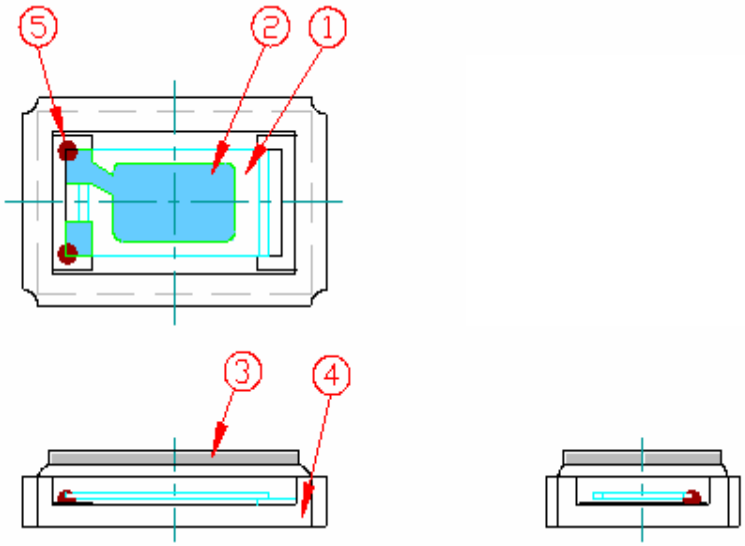

DESCRIPTION	
1	Quartz Blank
2	Electrode
3	Lid
4	Base
5	Conductive adhesive

2.3 MARKING

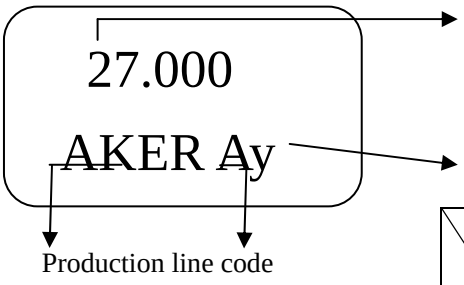

Year / Month	2007	2008	2009	2010
	2011	2012	2013	2014
	2015	2016	2017	2018
	2019	2020	2021	2022
	2023	2024	2025	2026
JAN	A	N	a	n
FEB	B	P	b	p
MAR	C	Q	c	q
APR	D	R	d	r
MAY	E	S	e	s
JUN	F	T	f	t
JUL	G	U	g	u
AUG	H	V	h	v
SEP	J	W	j	w
OCT	K	X	k	x
NOV	L	Y	l	y
DEC	M	Z	m	z

3. CHARACTERISTICS

Units and values indicated with { } in this specification are the former units and the specified values.

Standard atmospheric conditions:

Unless otherwise specified, the standard range of atmospheric conditions for making measurements and tests is as follows:

Ambient temperature: 15℃ to 35℃

Relative humidity : 25% to 85%

Air pressure : 86 to 106 kPa

If there is any doubt about the results, measurements shall be made within the following limits:

Ambient temperature : 25℃±1℃

Relative humidity : 63% to 67%

Air pressure : 86 to 106 kPa

Operating temperature range:

The operating temperature range is the range of ambient temperatures at which the quartz crystal oscillator can be stored without damage. Conditions are as specified elsewhere on these specifications.

Operating temperature range: -10℃ to +70℃

Storage temperature range:

The storage temperature range is the range of ambient temperatures at which the quartz crystal oscillator can be stored without damage. Conditions are as specified elsewhere on these specifications.

Storage temperature range: -40℃ to +85℃

3.1 Mechanical characteristics

Provided that measurement shall be carried out after letting it alone in the room temperature for 1h.

Item		Specifications	
1	Drop Test	Dropping 3 times from the height of 75cm onto hard wooden board of thickness more than 30mm.	
2	Mechanical Shock	Devices are shocked to half sine wave (1000 G) three mutually perpendicular axes each 3 times.	
3	Vibration	(1) Vibration Frequency	10~55Hz
		(2) Cycle	1 to 2 min
		(3) Amplitude	1.0mm
		(4) Direction	X.Y.Z
		(5) Time	2hr for each direction
4	Solderability	MIL - STD - 20E Method 208C Temperature 245℃±5℃ Material H63A (Silver 2 ~ 3 %) Immersion depth 0.5 mm minimum Immersion time 3 ± 0.5 seconds Flux Rosin resin methyl alcohol solvent (1 : 4)	
5	Resistance to Soldering Heat	MIL - SLD -202, Method 210, Condition I or J 10 sec immersion into 260 ± 5℃ solder pot, above 180℃ is 90 ~ 120 sec.	

*Frequency variation shall be within +/-5ppm and equivalent resistance less than ±15% max. after the test.

Note: Measuring the frequency should be done after keeping test samples at room temperature for 24 hours.

3.2 Environmental characteristics

Provided that measurement shall be carried out after letting it alone in the room temperature for 1h.

Item		Specifications
1	Humidity	It alone at 40℃± 2℃ in humidity of 90~95% for 48h.
2	Storage in Low Temperature	It alone at –40℃± 2℃ for 240h.
3	Storage in High Temperature	It alone at 85℃± 2℃ for 240h.
4	Temperature Cycle	The following temperature cycle (10 cycles). Refer to below Fig. Temperature shift from low to high, high to low shall be done in 1℃/min.

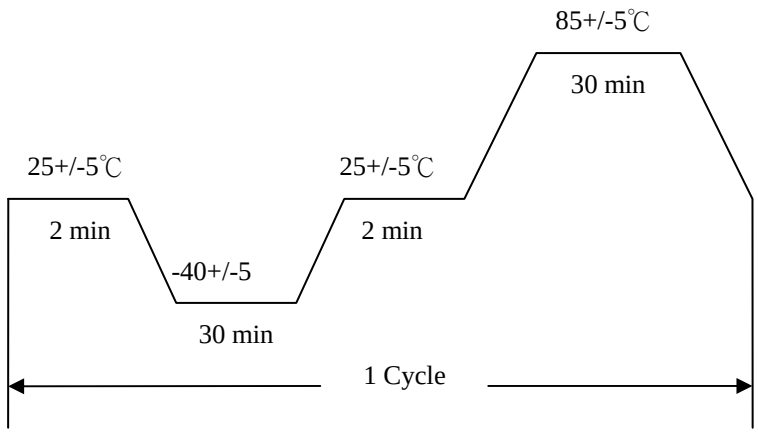

*Frequency variation shall be within +/-5ppm and equivalent resistance less than ±15% max. after the test.

Note: Measuring the frequency should be done after keeping test samples at room temperature for 24 hours.

3.3 SUGGESTED IR REFLOW PROFILE

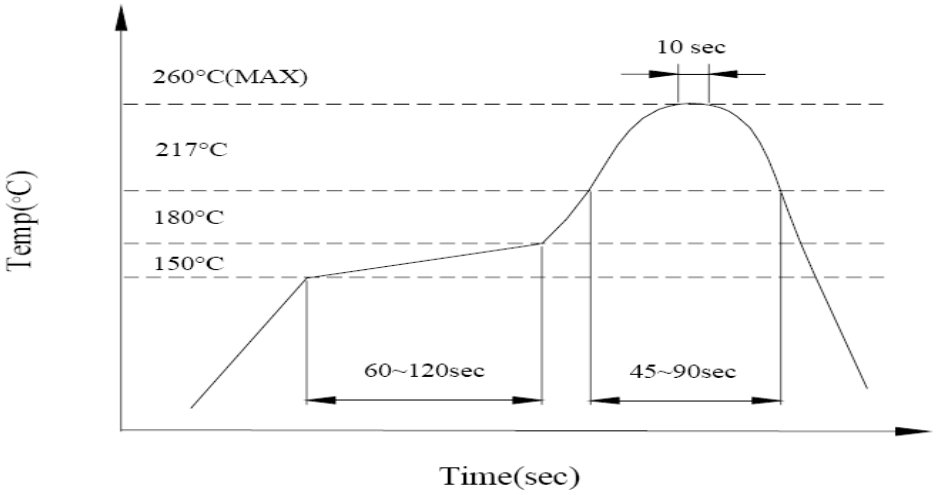

4. PACKING

TAPE SPECIFICATION

(Unit : mm)

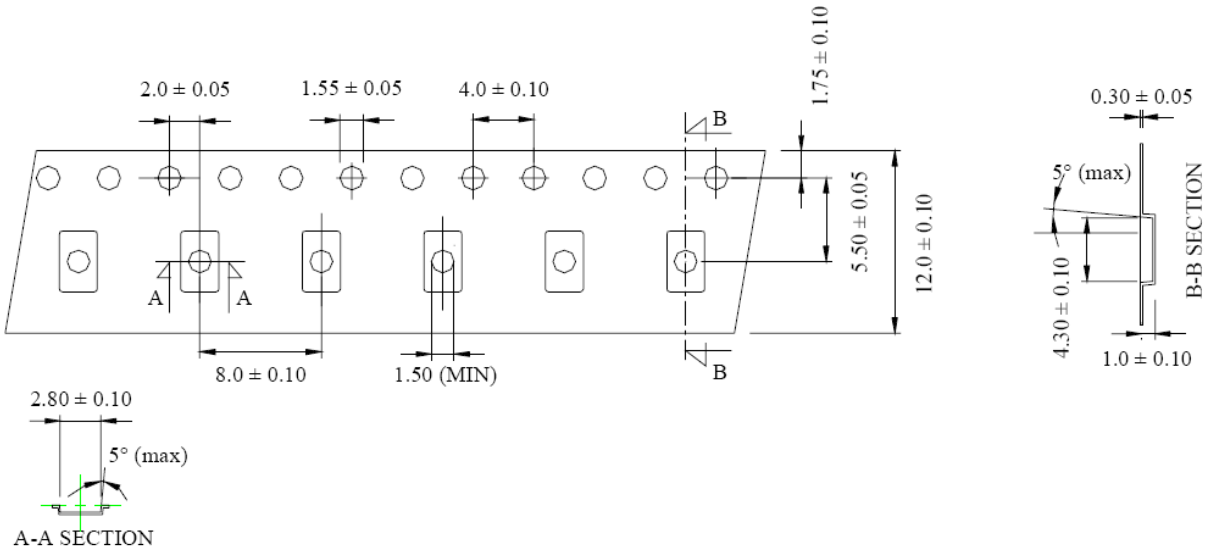

TAPE DIMENSION

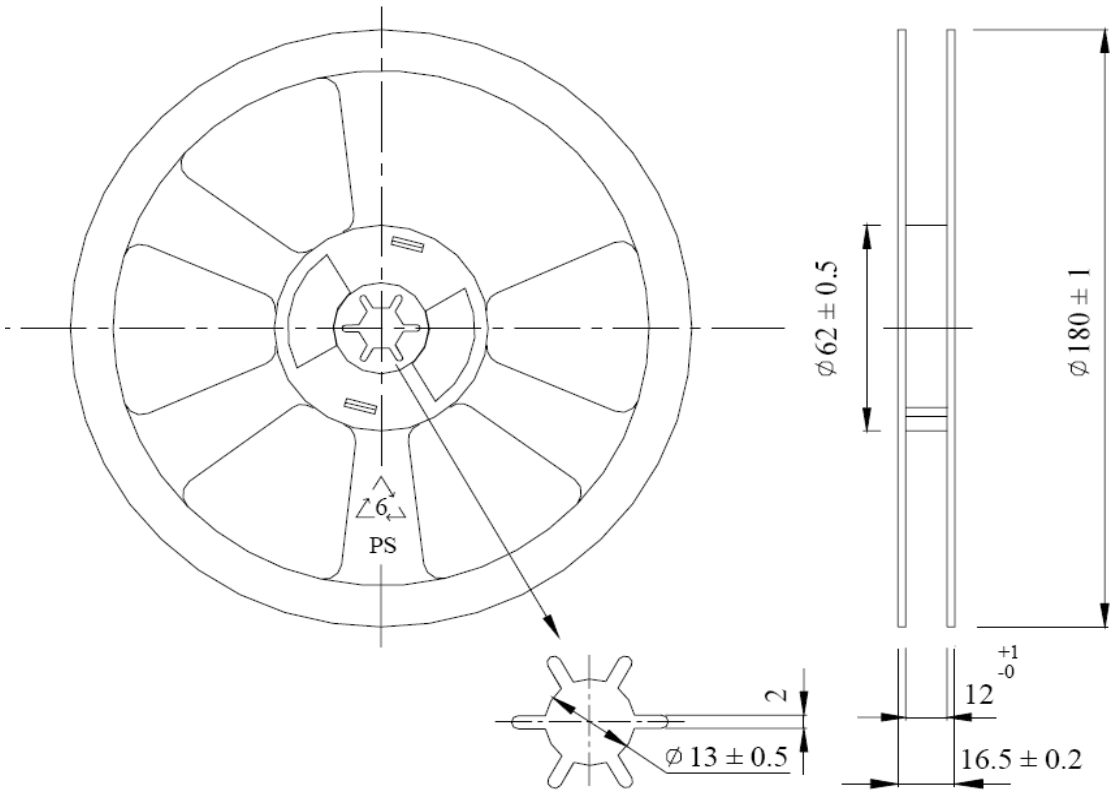

5. COVER TAPE ADHESION STRENGTH

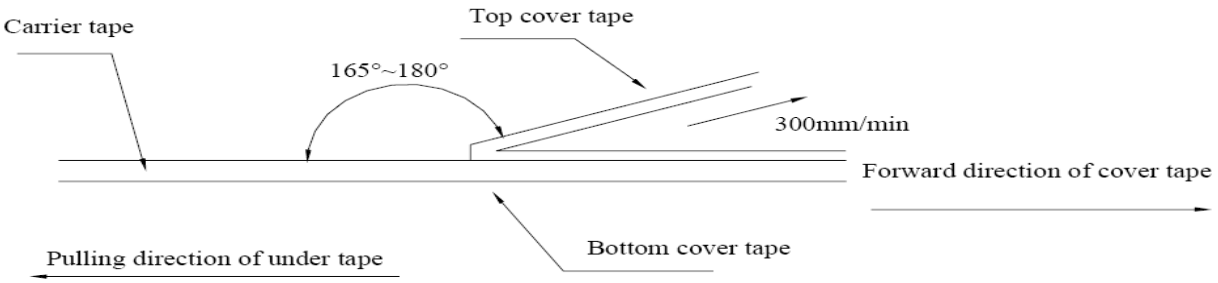

*** In the case, the cover tape is pulled off under the above conditions the cover tape adhesion strength should be as follows. *** Plastic tape:10.2g~71.4g

(Cover tape adhesion strength)

6. Note

1. Only the lead should be heated when soldering.

   In case that the package temperature is exceeding 150°C , it may impair the crystal or may cause the crystal quartz to destroy.

2. Pulling the lead strongly may cause cracking of the hermetic grass seal bending the lead closely from the case may also cause same problem, so when the lead needs to be bent, please leave move than 05.mm of lead from the case.

3. Too much shock or vibration is not allowed. According to conditions such as machine shock during the assembly, the internal quartz crystal might be damaged.

   Please check your conditions carefully when using it in advance.

4. Don't storage or use in the environment that temperature may change rapidly to avoid the condensation. And also we recommend to storage the products in the normal environment. (Temperature, humidity)

5. This product can be subjected to ultrasonic cleaning. However, since the oscillator may be affected depending on the condition, be sure to check it.

6. Applying excessive drive level to the quartz crystal may cause deterioration for characteristics or damage.

   Circuit design must be such as to maintain a proper drive level.

7. Unless adequate negative resistance is allocated in the oscillation circuit, startup time of oscillation may be increased or no oscillation may occur. In order to avoid this, provide enough negative resistance in the circuitry design.