HCTS299MS

Radiation Hardened 8-Bit Universal Shift Register; Three-State

August 1995

Features

- 3 Micron Radiation Hardened CMOS SOS
- Total Dose 200K RAD (Si)
- SEP Effective LET No Upsets: >100 MEV-cm^2/mg
- Single Event Upset (SEU) Immunity < 2 x 10^{-9} Errors/Bit-Day (Typ)
- Dose Rate Survivability: >1 x 10^{12} RAD (Si)/s
- Dose Rate Upset >10^{10} RAD (Si)/s 20ns Pulse
- Latch-Up Free Under Any Conditions
- Fanout (Over Temperature Range)
  -Bus Driver Outputs: 15 LSTTL Loads
- Military Temperature Range: -55°C to +125°C
- Significant Power Reduction Compared to LSTTL ICs
- DC Operating Voltage Range: 4.5V to 5.5V
- LSTTL Input Compatibility
  -VIL = 0.8V Max
  -VIH = VCC/2 Min
- Input Current Levels Ii $\leq$ 5μA at VOL, VOH

Description

The Intersil HCTS299MS is a Radiation Hardened 8-bit shift/storage register with three-state bus interface capability. The register has four synchronous operating modes controlled by the two select inputs (S0, S1). The mode select, the serial data (DS0, DS7) and the parallel data (IO0 - IO7) respond only to the low to high transition of the clock (CP) pulse. S0, S1 and the data inputs must be one set up time period prior to the clocks positive transition. The master reset ($\overline{MR}$) is an asynchronous active low input.

The HCTS299MS utilizes advanced CMOS/SOS technology to achieve high-speed operation. This device is a member of radiation hardened, high-speed, CMOS/SOS Logic Family with TTL input compatibility.

Pinouts

20 LEAD CERAMIC DUAL-IN-LINE METAL SEAL PACKAGE (SBDIP) MIL-STD-1835 CDIP2-T20
TOP VIEW

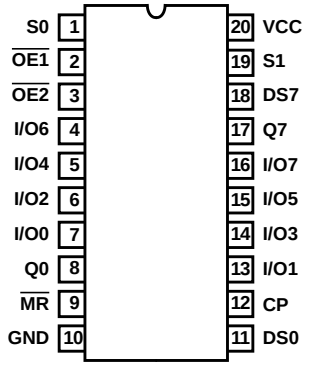

20 LEAD CERAMIC METAL SEAL FLATPACK PACKAGE (FLATPACK) MIL-STD-1835 CDFP4-F20
TOP VIEW

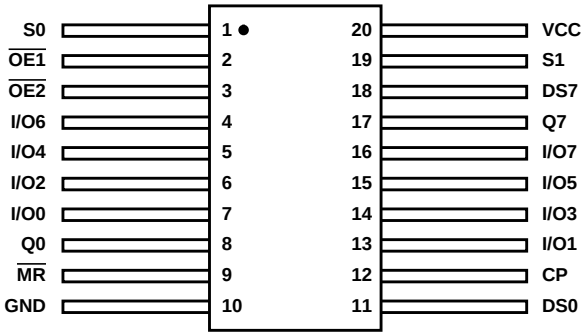

Ordering Information

PART NUMBER	TEMPERATURE RANGE	SCREENING LEVEL	PACKAGE
HCTS299DMSR	-55°C to +125°C	Intersil Class S Equivalent	20 Lead SBDIP
HCTS299KMSR	-55°C to +125°C	Intersil Class S Equivalent	20 Lead Ceramic Flatpack
HCTS299D/Sample	+25°C	Sample	20 Lead SBDIP
HCTS299K/Sample	+25°C	Sample	20 Lead Ceramic Flatpack
HCTS299HMSR	+25°C	Die	Die

CAUTION: These devices are sensitive to electrostatic discharge; follow proper IC Handling Procedures.
http://www.intersil.com or 407-727-9207 | Copyright © Intersil Corporation 1999

Spec Number **518640**
File Number **3069.1**

Functional Block Diagram

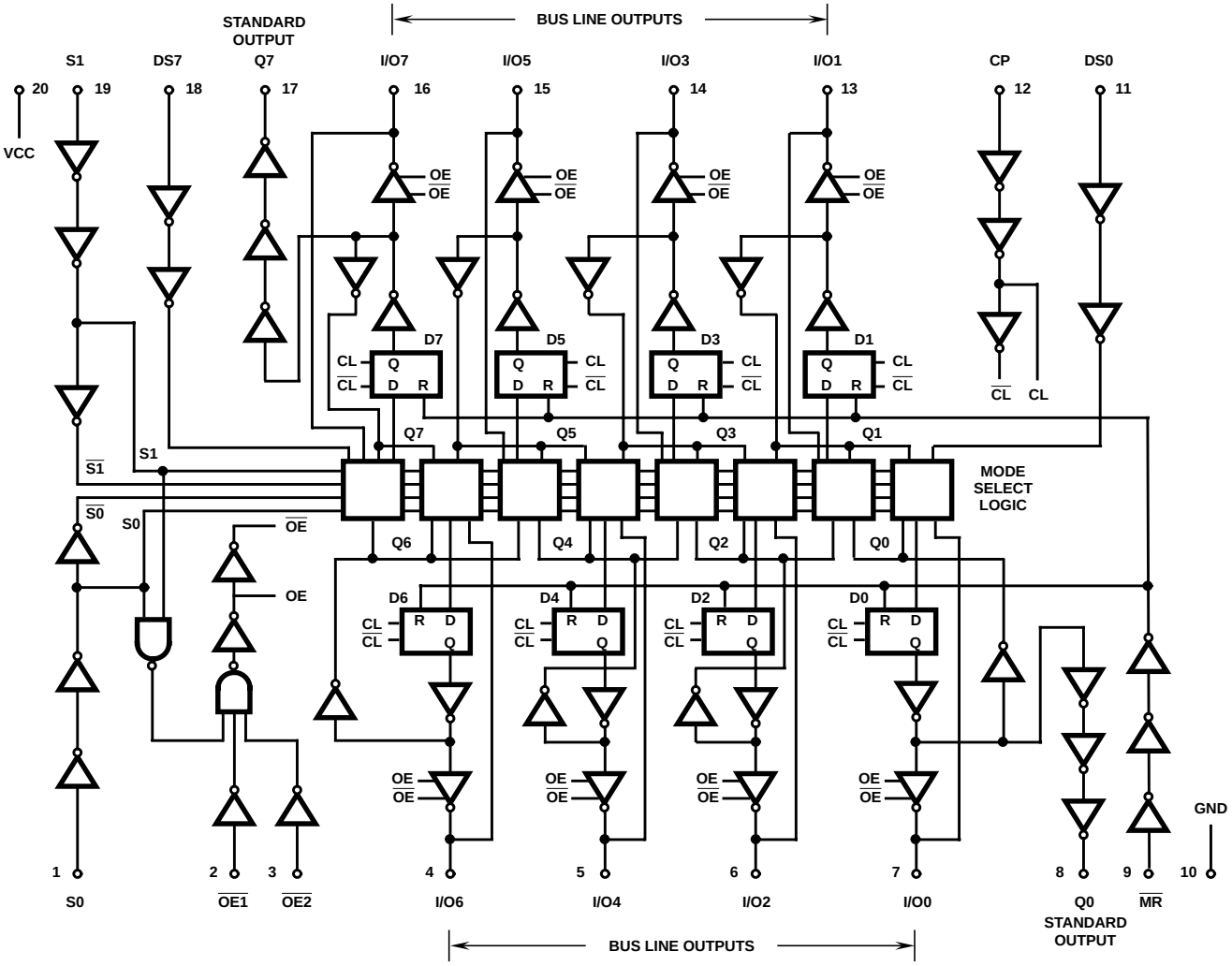

TRUTH TABLE

Register Operating Modes

FUNCTION	INPUTS							REGISTER OUTPUTS				
	$\overline{MR}$	CP	S0	S1	DS0	DS7	I/On	Q0	Q1	. . .	Q6	Q7
Reset (Clear)	L	X	X	X	X	X	X	L	L	. . .	L	L
Shift Right	H	↑	h	l	l	X	X	L	q0	. . .	q5	q6
	H	↑	h	l	h	X	X	H	q0	. . .	q5	Q6
Shift Left	H	↑	l	h	X	l	X	q1	q2	. . .	q7	L
	H	↑	l	h	X	h	X	q1	q2	. . .	q7	H
Hold (Do Nothing)	H	↑	l	l	X	X	X	q0	q1	. . .	q6	q7
Parallel Load	H	↑	h	h	X	X	l	L	L	. . .	L	L
	H	↑	h	h	X	X	h	H	H	. . .	H	H

TRUTH TABLE

Three-State I/O Port Operating Mode

FUNCTION	INPUTS					INPUTS/OUTPUTS
	$\overline{OE1}$	$\overline{OE2}$	S0	S1	Qn (REGISTER)	I/O0 . . . I/O7
Read Register	L	L	L	X	L	L
	L	L	L	X	H	H
	L	L	X	L	L	L
	L	L	X	L	H	H
Load Register	X	X	H	H	Qn = I/On	I/On = Inputs
Disable I/O	H	X	X	X	X	Z
	X	H	X	X	X	Z

H = HighVoltage Level
L = Low Voltage Level
X = Immaterial
Z = Output in High Impedance State
h = Input Voltage High One Setup Time Prior Clock Transition
l = Input voltage Low One Setup Time Prior Clock Transition
↑ = Low-to-High Clock Transition

qn = Lower Case Letter Indicates the State of the Referenced Output One Setup Time Prior Clock Transition

Absolute Maximum Ratings

Supply Voltage (VCC). . . . . -0.5 to +7.0V
Input Voltage Range, All Inputs . . . . . -0.5V to VCC +0.5V
DC Input Current, Any One Input . . . . . ±10mA
DC Drain Current, Any One Output. . . . . ±25mA
(All Voltage Reference to the VSS Terminal)
Storage Temperature Range (TSTG) . . . . . -65^oC to $+150^oC$
Lead Temperature (Soldering 10sec) . . . . . $+265^oC$
Junction Temperature (TJ) . . . . . $+175^oC$
ESD Classification . . . . . Class 1

Reliability Information

Thermal Resistance	θ_{JA}	θ_{JC}
SBDIP Package	$72^oC/W$	$24^oC/W$
Ceramic Flatpack Package	$107^oC/W$	$28^oC/W$

Maximum Package Power Dissipation at $+125^oC$ Ambient
SBDIP Package. 0.69W
Ceramic Flatpack Package 0.47W
If device power exceeds package dissipation capability, provide heat sinking or derate linearly at the following rate:
SBDIP Package. . . . . $13.9mW/^oC$
Ceramic Flatpack Package . . . . . $9.3mW/^oC$

CAUTION: As with all semiconductors, stress listed under "Absolute Maximum Ratings" may be applied to devices (one at a time) without resulting in permanent damage. This is a stress rating only. Exposure to absolute maximum rating conditions for extended periods may affect device reliability. The conditions listed under "Electrical Performance Characteristics" are the only conditions recommended for satisfactory device operation.

Operating Conditions

Supply Voltage (VCC). . . . . +4.5V to +5.5V
Operating Temperature Range (T_A) . . . . . -55^oC to $+125^oC$
Input Rise and Fall Times at 4.5V VCC (TR, TF) . . . . . 500ns Max
Input Low Voltage (VIL). . . . . 0.0V to 0.8V
Input High Voltage (VIH) . . . . . VCC/2 to VCC

TABLE 1. DC ELECTRICAL PERFORMANCE CHARACTERISTICS

PARAMETER	SYMBOL	(NOTE 1) CONDITIONS	GROUP A SUB-GROUPS	TEMPERATURE	LIMITS MIN	LIMITS MAX	UNITS
Quiescent Current	ICC	VCC = 5.5V, VIN = VCC or GND	1	$+25^oC$	-	40	µA
			2, 3	$+125^oC$, -55^oC	-	750	µA
Output Current (Sink)	IOL	VCC = 4.5V, VIH = 4.5V, VOUT = 0.4V, VIL = 0V	1	$+25^oC$	7.2	-	mA
			2, 3	$+125^oC$, -55^oC	6.0	-	mA
Output Current (Source)	IOH	VCC = 4.5V, VIH = 4.5V, VOUT = VCC - 0.4V, VIL = 0V	1	$+25^oC$	-7.2	-	mA
			2, 3	$+125^oC$, -55^oC	-6.0	-	mA
Output Voltage Low	VOL	VCC = 4.5V, VIH = 2.25V, IOL = 50µA, VIL = 0.8V	1, 2, 3	$+25^oC$, $+125^oC$, -55^oC	-	0.1	V
		VCC = 5.5V, VIH = 2.75V, IOL = 50µA, VIL = 0.8V	1, 2, 3	$+25^oC$, $+125^oC$, -55^oC	-	0.1	V
Output Voltage High	VOH	VCC = 4.5V, VIH = 2.25V, IOH = -50µA, VIL = 0.8V	1, 2, 3	$+25^oC$, $+125^oC$, -55^oC	VCC -0.1	-	V
		VCC = 5.5V, VIH = 2.75V, IOH = -50µA, VIL = 0.8V	1, 2, 3	$+25^oC$, $+125^oC$, -55^oC	VCC -0.1	-	V
Input Leakage Current	IIN	VCC = 5.5V, VIN = VCC or GND	1	$+25^oC$	-	±0.5	µA
			2, 3	$+125^oC$, -55^oC	-	±5.0	µA
Three-State Output Leakage Current	IOZ	Applied Voltage = 0V or VCC, VCC = 5.5V	1	$+25^oC$	-	±1	µA
			2, 3	$+125^oC$, -55^oC	-	±50	µA
Noise Immunity Functional Test	FN	VCC = 4.5V, VIH = 2.25V, VIL = 0.8V (Note 2)	7, 8A, 8B	$+25^oC$, $+125^oC$, -55^oC	-	-	-

NOTES:

1. All voltages referenced to device GND.
2. For functional tests, VO ≥ 4.0V is recognized as a logic "1", and VO ≤ 0.5V is recognized as a logic "0".

TABLE 2. AC ELECTRICAL PERFORMANCE CHARACTERISTICS

PARAMETER	SYMBOL	(NOTES 1, 2) CONDITIONS	GROUP A SUB-GROUPS	TEMPERATURE	LIMITS		UNITS
					MIN	MAX	
CLK to I/On	TPHL, TPLH	VCC = 4.5V	9	+25°C	2	28	ns
			10, 11	+125°C, -55°C	2	32	ns
CLK to Q0, Q7	TPHL, TPLH	VCC = 4.5V	9	+25°C	2	30	ns
			10, 11	+125°C, -55°C	2	34	ns
$\overline{MR}$ to Output	TPHL	VCC = 4.5V	9	+25°C	2	32	ns
			10, 11	+125°C, -55°C	2	36	ns
$\overline{OEn}$ to Output	TPZH	VCC = 4.5V	9	+25°C	2	23	ns
			10, 11	+125°C, -55°C	2	25	ns
	TPHZ		9	+25°C	2	25	ns
			10, 11	+125°C, -55°C	2	27	ns
	TPZL		9	+25°C	2	30	ns
			10, 11	+125°C, -55°C	2	34	ns
	TPLZ		9	+25°C	2	30	ns
			10, 11	+125°C, -55°C	2	34	ns

NOTES:

1. All voltages referenced to device GND.
2. AC measurements assume RL = 500Ω, CL = 50pF, Input TR = TF = 3ns, VIL = GND, VIH = 3V.

TABLE 3. ELECTRICAL PERFORMANCE CHARACTERISTICS

PARAMETER	SYMBOL	CONDITIONS	NOTES	TEMPERATURE	LIMITS		UNITS
					MIN	MAX	
Capacitance Power Dissipation	CPD	VCC = 5.0V, f = 1MHz	1	+25°C	-	147	pF
			1	+125°C, -55°C	-	171	pF
Input Capacitance	CIN	VCC = 5.0V, f = 1MHz	1	+25°C	-	10	pF
			1	+125°C	-	10	pF
Output Transition Time	TTHL, TTLH	VCC = 4.5V	1	+25°C	-	15	ns
			1	+125°C, -55°C	-	22	ns
Max Operating Frequency	FMAX	VCC = 4.5V	1	+25°C	-	25	MHz
			1	+125°C, -55°C	-	16	MHz
Setup Time DS0, DS7, I/On to CLK	TSU	VCC = 4.5V	1	+25°C	20	-	ns
			1	+125°C, -55°C	30	-	ns

TABLE 3. ELECTRICAL PERFORMANCE CHARACTERISTICS (Continued)

PARAMETER	SYMBOL	CONDITIONS	NOTES	TEMPERATURE	LIMITS		UNITS
					MIN	MAX	
Setup Time S1, S0 to CLK	TSU	VCC = 4.5V	1	+25°C	27	-	ns
			1	+125°C, -55°C	41	-	ns
Hold Time DS0, DS7, I/On, S0, S1 to CLK	TH	VCC = 4.5V	1	+25°C	0	-	ns
			1	+125°C, -55°C	0	-	ns
Recovery Time $\overline{MR}$ to CLK	TREC	VCC = 4.5V	1	+25°C	5	-	ns
			1	+125°C, -55°C	5	-	ns
Pulse Width $\overline{MR}$	TW ($\overline{MR}$)	VCC = 4.5V	1	+25°C	15	-	ns
			1	+125°C, -55°C	22	-	ns
Pulse Width CLK	TW (CLK)	VCC = 4.5V	1	+25°C	20	-	ns
			1	+125°C, -55°C	30	-	ns

NOTE:

1. The parameters listed in Table 3 are controlled via design or process parameters. Min and Max Limits are guaranteed but not directly tested. These parameters are characterized upon initial design release and upon design changes which affect these characteristics.

TABLE 4. DC POST RADIATION ELECTRICAL PERFORMANCE CHARACTERISTICS

PARAMETER	SYMBOL	(NOTES 1, 2) CONDITIONS	TEMPERATURE	200K RAD LIMITS		UNITS
				MIN	MAX	
Quiescent Current	ICC	VCC = 5.5V, VIN = VCC or GND	+25°C	-	0.75	mA
Output Current (Sink)	IOL	VCC = 4.5V, VIN = VCC or GND, VOUT = 0.4V	+25°C	6.0	-	mA
Output Current (Source)	IOH	VCC = 4.5V, VIN = VCC or GND, VOUT = VCC -0.4V	+25°C	-6.0	-	mA
Output Voltage Low	VOL	VCC = 4.5V or 5.5V, VIH = VCC/2, VIL = 0.8V, IOL = 50µA	+25°C	-	0.1	V
Output Voltage High	VOH	VCC = 4.5V or 5.5V, VIH =VCC/2, VIL = 0.8V, IOH = -50µA	+25°C	VCC -0.1	-	V
Input Leakage Current	IIN	VCC = 5.5V, VIN = VCC or GND	+25°C	-	±5	µA
Three-State Output Leakage Current	IOZ	Applied Voltage = 0V or VCC, VCC = 5.5V	+25°C	-	±50	µA
Noise Immunity Functional Test	FN	VCC = 4.5V, VIH = 2.25V, VIL = 0.8V, (Note 3)	+25°C	-	-	-
CLK to I/On	TPHL, TPLH	VCC = 4.5V	+25°C	2	32	ns
CLK to Q0, Q7	TPHL, TPLH	VCC = 4.5V	+25°C	2	34	ns

TABLE 4. DC POST RADIATION ELECTRICAL PERFORMANCE CHARACTERISTICS

PARAMETER	SYMBOL	(NOTES 1, 2) CONDITIONS	TEMPERATURE	200K RAD LIMITS		UNITS
				MIN	MAX	
$\overline{MR}$ to Output	TPHL	VCC = 4.5V	+25°C	2	36	ns
$\overline{OEn}$ to Output	TPZH	VCC = 4.5V	+25°C	2	25	ns
	TPHZ			2	27	ns
	TPZL	VCC = 4.5V	+25°C	2	34	ns
	TPLZ			2	34	ns

NOTES:

1. All voltages referenced to device GND.
2. AC measurements assume RL = 500Ω, CL = 50pF, Input TR =TF = 3ns, VIL = GND, VIH = 3V.
3. For functional tests VO ≥ 4.0V is recognized as a logic “1”, and VO ≤ 0.5V is recognized as a logic “0”.

TABLE 5. BURN-IN AND OPERATING LIFE TEST, DELTA PARAMETERS (+25°C)

PARAMETER	GROUP B SUBGROUP	DELTA LIMIT
ICC	5	12µA
IOL/IOH	5	-15% of 0 Hour
IOZL/IOZH	5	±200nA

TABLE 6. APPLICABLE SUBGROUPS

CONFORMANCE GROUPS		METHOD	GROUP A SUBGROUPS	READ AND RECORD
Initial Test (Preburn-In)		100%/5004	1, 7, 9	ICC, IOL/H, IOZL/H
Interim Test I (Postburn-In)		100%/5004	1, 7, 9	ICC, IOL/H, IOZL/H
Interim Test II (Postburn-In)		100%/5004	1, 7, 9	ICC, IOL/H, IOZL/H
PDA		100%/5004	1, 7, 9, Deltas	
Interim Test III (Postburn-In)		100%/5004	1, 7, 9	
PDA		100%/5004	1, 7, 9, Deltas	
Final Test		100%/5004	2, 3, 8A, 8B, 10, 11	
Group A (Note 1)		Sample/5005	1, 2, 3, 7, 8A, 8B, 9, 10, 11	
Group B	Subgroup B-5	Sample/5005	1, 2, 3, 7, 8A, 8B, 9, 10, 11, Deltas	Subgroups 1, 2, 3, 9, 10, 11
	Subgroup B-6	Sample/5005	1, 7, 9	
Group D		Sample/5005	1, 7, 9	

NOTE: 1. Alternate Group A Inspection in accordance with Method 5005 of MIL-STD-883 may be exercised.

TABLE 7. TOTAL DOSE IRRADIATION

CONFORMANCE GROUPS	METHOD	TEST		READ AND RECORD	
		PRE RAD	POST RAD	PRE RAD	POST RAD
Group E Subgroup 2	5005	1, 7, 9	Table 4	1, 9	Table 4 (Note 1)

NOTE: 1. Except FN test which will be performed 100% Go/No-Go.

TABLE 8. STATIC BURN-IN AND DYNAMIC

OPEN	GROUND	1/2 VCC = 3V ± 0.5V	VCC = 6V ± 0.5V	OSCILLATOR	
				50kHz	25kHz
STATIC BURN-IN I TEST CONNECTIONS (Note 1)					
8, 17	1 - 7, 9 - 16, 18, 19	-	20	-	-
STATIC BURN-IN II TEST CONNECTIONS (Note 1)					
8, 17	10	-	1 - 7, 9, 11 - 16, 18 - 20	-	-
DYNAMIC BURN-IN TEST CONNECTIONS (Note 2)					
-	2, 3, 10, 18, 19	4 - 8, 13 - 17	1, 9, 20	12	11

NOTES:

1. Each pin except VCC and GND will have a resistor of 10kΩ ± 5% for static burn-in
2. Each pin except VCC and GND will have a resistor of 680Ω ± 5% for dynamic burn-in

TABLE 9. IRRADIATION TEST CONNECTIONS

OPEN	GROUND	VCC = 5V ± 0.5V
8, 17	10	1 - 7, 9, 11 - 16, 18 - 20

NOTE: Each pin except VCC and GND will have a resistor of 47KΩ ± 5% for irradiation testing. Group E, Subgroup 2, sample size is 4 dice/wafer 0 failures.

Intersil Space Level Product Flow - 'MS'

Wafer Lot Acceptance (All Lots) Method 5007 (Includes SEM)

GAMMA Radiation Verification (Each Wafer) Method 1019, 4 Samples/Wafer, 0 Rejects

100% Nondestructive Bond Pull, Method 2023

Sample - Wire Bond Pull Monitor, Method 2011

Sample - Die Shear Monitor, Method 2019 or 2027

100% Internal Visual Inspection, Method 2010, Condition A

100% Temperature Cycle, Method 1010, Condition C, 10 Cycles

100% Constant Acceleration, Method 2001, Condition per Method 5004

100% PIND, Method 2020, Condition A

100% External Visual

100% Serialization

100% Initial Electrical Test (T0)

100% Static Burn-In 1, Condition A or B, 24 hrs. min., +125°C min., Method 1015

100% Interim Electrical Test 1 (T1)

100% Delta Calculation (T0-T1)

100% Static Burn-In 2, Condition A or B, 24 hrs. min., +125°C min., Method 1015

100% Interim Electrical Test 2 (T2)

100% Delta Calculation (T0-T2)

100% PDA 1, Method 5004 (Notes 1and 2)

100% Dynamic Burn-In, Condition D, 240 hrs., +125°C or Equivalent, Method 1015

100% Interim Electrical Test 3 (T3)

100% Delta Calculation (T0-T3)

100% PDA 2, Method 5004 (Note 2)

100% Final Electrical Test

100% Fine/Gross Leak, Method 1014

100% Radiographic, Method 2012 (Note 3)

100% External Visual, Method 2009

Sample - Group A, Method 5005 (Note 4)

100% Data Package Generation (Note 5)

NOTES:

1. Failures from Interim electrical test 1 and 2 are combined for determining PDA 1.
2. Failures from subgroup 1, 7, 9 and deltas are used for calculating PDA. The maximum allowable PDA = 5% with no more than 3% of the failures from subgroup 7.
3. Radiographic (X-Ray) inspection may be performed at any point after serialization as allowed by Method 5004.
4. Alternate Group A testing may be performed as allowed by MIL-STD-883, Method 5005.
5. Data Package Contents:
   - Cover Sheet (Intersil Name and/or Logo, P.O. Number, Customer Part Number, Lot Date Code, Intersil Part Number, Lot Number, Quantity).
   - Wafer Lot Acceptance Report (Method 5007). Includes reproductions of SEM photos with percent of step coverage.
   - GAMMA Radiation Report. Contains Cover page, disposition, Rad Dose, Lot Number, Test Package used, Specification Numbers, Test equipment, etc. Radiation Read and Record data on file at Intersil.
   - X-Ray report and film. Includes penetrometer measurements.
   - Screening, Electrical, and Group A attributes (Screening attributes begin after package seal).
   - Lot Serial Number Sheet (Good units serial number and lot number).
   - Variables Data (All Delta operations). Data is identified by serial number. Data header includes lot number and date of test.
   - The Certificate of Conformance is a part of the shipping invoice and is not part of the Data Book. The Certificate of Conformance is signed by an authorized Quality Representative.

AC Timing Diagrams and Load Circuit

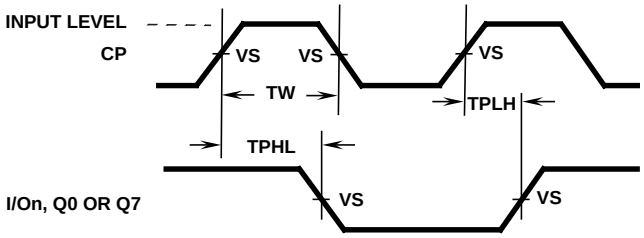

FIGURE 1. CLOCK PRE-REQUISITE AND PROPAGATION DELAYS

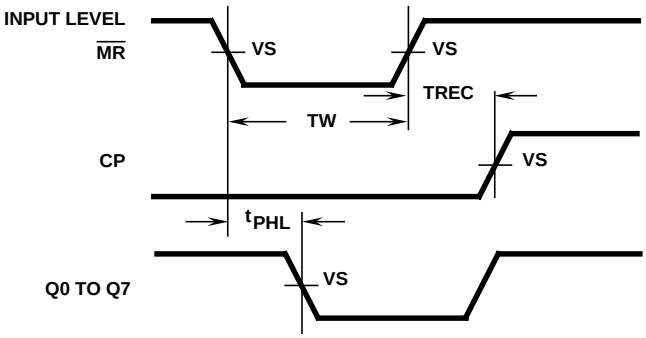

FIGURE 2. MASTER RESET PRE-REQUISITE AND PROPAGATION DELAYS

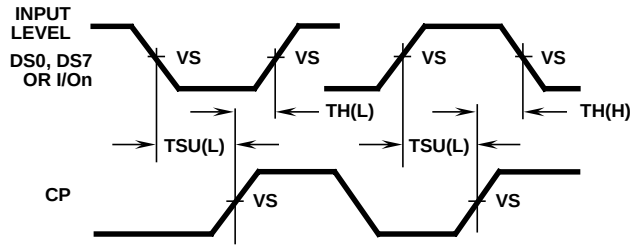

FIGURE 3. DATA PRE-REQUISITE TIMES

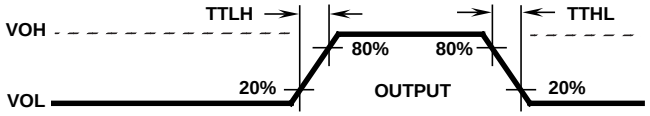

FIGURE 4. OUTPUT TRANSITION TIME

AC VOLTAGE LEVELS

PARAMETER	HCTS	UNITS
VCC	4.50	V
VIH	3.00	V
VS	1.30	V
VIL	0	V
GND	0	V

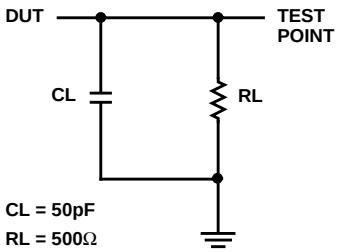

FIGURE 5. AC LOAD CIRCUIT

Three-State Low Timing Diagrams

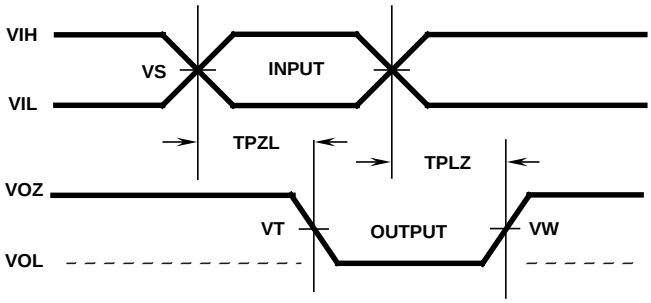

Three-State LOW VOLTAGE LEVELS

PARAMETER	HCTS	UNITS
VCC	4.50	V
VIH	3.00	V
VS	1.30	V
VT	1.30	V
VW	0.90	V
VIL	0	V
GND	0	V

Three-State Low Load Circuit

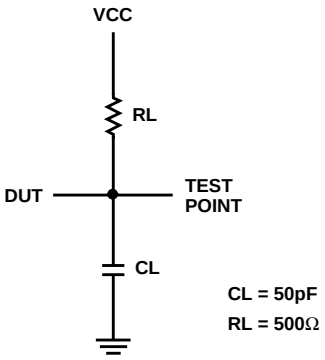

Three-State High Timing Diagrams

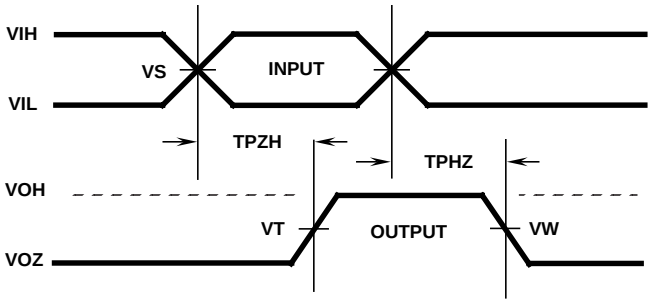

Three-State HIGH VOLTAGE LEVELS

PARAMETER	HCTS	UNITS
VCC	4.50	V
VIH	3.00	V
VS	1.30	V
VT	1.30	V
VW	3.60	V
VIL	0	V
GND	0	V

Three-State High Load Circuit

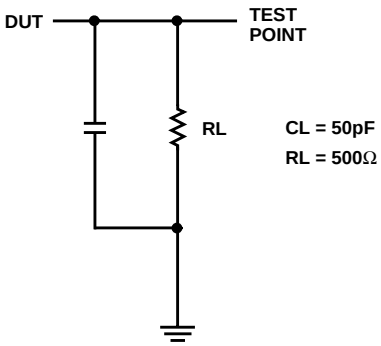

Die Characteristics

DIE DIMENSIONS:
123 x 94 mils

METALLIZATION:
Type: SiAl
Metal Thickness: 11kÅ ± 1kÅ

GLASSIVATION:
Type: SiO_2
Thickness: 13kÅ ± 2.6kÅ

WORST CASE CURRENT DENSITY:
$<2.0 \times 10^5 A/cm^2$

BOND PAD SIZE:
100µm x 100µm
4 mils x 4 mils

Metallization Mask Layout

HCTS299MS

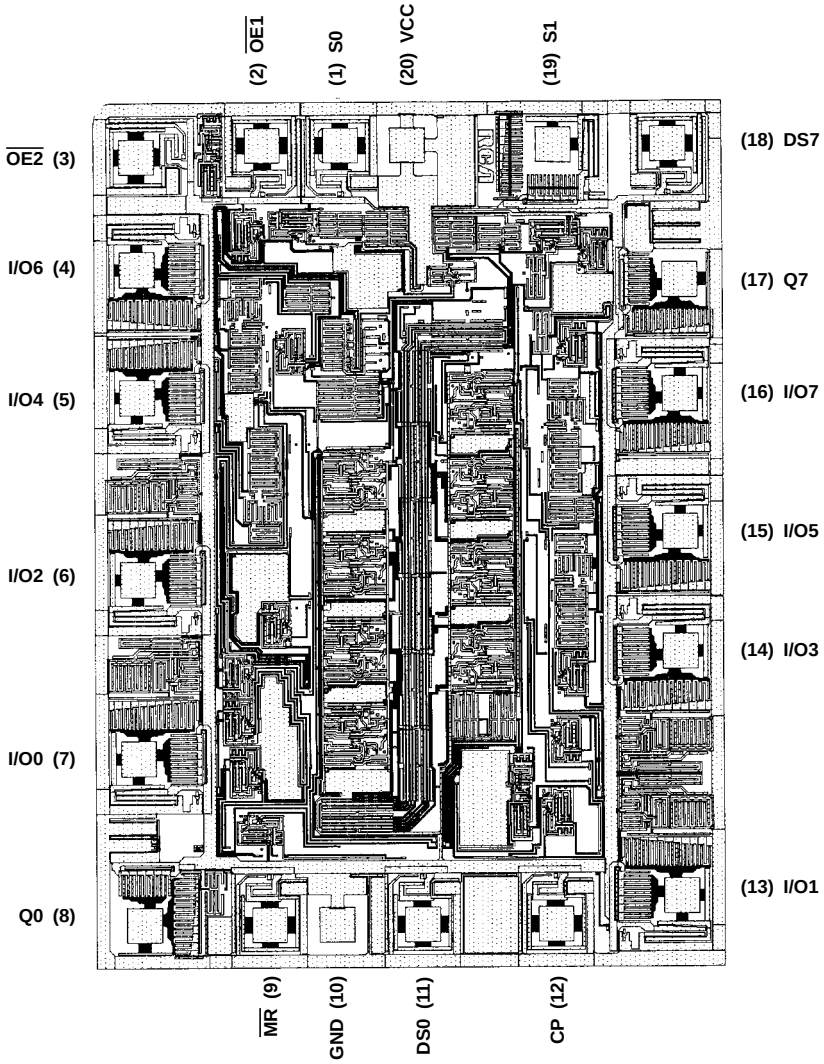

NOTE: The die diagram is a generic plot from a similar HCS device. It is intended to indicate approximate die size and bond pad location. The mask series for the HCTS299 is TA14480A.

All Intersil semiconductor products are manufactured, assembled and tested under **ISO9000** quality systems certification.

Intersil products are sold by description only. Intersil Corporation reserves the right to make changes in circuit design and/or specifications at any time without notice. Accordingly, the reader is cautioned to verify that data sheets are current before placing orders. Information furnished by Intersil is believed to be accurate and reliable. However, no responsibility is assumed by Intersil or its subsidiaries for its use; nor for any infringements of patents or other rights of third parties which may result from its use. No license is granted by implication or otherwise under any patent or patent rights of Intersil or its subsidiaries.

For information regarding Intersil Corporation and its products, see web site **http://www.intersil.com**

Sales Office Headquarters

NORTH AMERICA
Intersil Corporation
P. O. Box 883, Mail Stop 53-204
Melbourne, FL 32902
TEL: (407) 724-7000
FAX: (407) 724-7240

EUROPE
Intersil SA
Mercure Center
100, Rue de la Fusee
1130 Brussels, Belgium
TEL: (32) 2.724.2111
FAX: (32) 2.724.22.05

ASIA
Intersil (Taiwan) Ltd.
Taiwan Limited
7F-6, No. 101 Fu Hsing North Road
Taipei, Taiwan
Republic of China
TEL: (886) 2 2716 9310
FAX: (886) 2 2715 3029