HCPL-M452/HCPL-M453

Small Outline, 5 Lead, High Speed Optocouplers

AVAGO TECHNOLOGIES

Data Sheet



Lead (Pb) Free
RoHS 6 fully compliant

RoHS 6 fully compliant options available;
-xxxE denotes a lead-free product

Description

These small outline high CMR, high speed, diode-transistor optocouplers are single channel devices in a five lead miniature footprint. They are electrically equivalent to the following Avago optocouplers:

The SO-5 JEDEC registered (MO-155) package outline does not require "through holes" in a PCB. This package occupies approximately one-fourth the footprint area of the standard dual-in-line package. The lead profile is designed to be com-patible with standard surface mount processes.

These diode-transistor optocouplers use an insulating layer between the light emitting diode and an integrated photon detector to provide electrical insulation between input and output. Separate connections for the photodiode bias and output transistor collector increase the speed up to a hundred times over that of a conventional photo-transistor coupler by reducing the base-collector capacitance.

The HCPL-M452 is designed for high speed TTL/TTL applications. A standard 16 mA TTL sink current through the input LED will provide enough output current for 1 TTL load and a 5.6 ký pull-up resistor. CTR of the HCPL-M452 is 19% minimum at I_F = 16 mA.

The HCPL-M453 is an HCPL-M452 with increased common mode transient immunity of 15,000 V/µs minimum at V_{CM} = 1500 V guaranteed.

Ordering Options

SO-5 Package	Standard DIP	SO-8 Package
HCPL-M452	HCPL-4502	HCPL-0452
HCPL-M453	HCPL-4503	HCPL-0453

Note: These devices equivalent to 6N135/6N136 devices but without the base lead.

Features

- Surface mountable
- Very small, low profile JEDEC registered package outline
- Compatible with infrared vapor phase reflow and wave soldering processes
- Very high common mode transient immunity: 15000 V/µs at V_{CM} = 1500 V guaranteed (HCPL-M453)
- High speed: 1 Mb/s
- TTL compatible
- Open collector output
- Worldwide Safety Approval:
  - UL1577 recognized, 3750Vrms/1min
  - CSA Approved
- Lead free option

Applications

- Line receivers: High common mode transient immunity (>1000 V/µs) and low input-output capacitance (0.6 pF).
- High speed logic ground isolation: TTL/TTL, TTL/LTTL, TTL/CMOS, TTL/LSTTL
- Replace slow phototransistor optocouplers
- Replace pulse transformers: save board space and weight
- Analog signal ground isolation: Integrated photon detector provides improved linearity over photo-transistor type

CAUTION: *The small device geometries inherent to the design of this bipolar component increase the component's susceptibility to damage from electrostatic discharge (ESD). It is advised that normal static precautions be taken in handling and assembly of this component to prevent damage and/or degradation which may be induced by ESD.*

Ordering Information

HCPL-M452 and HCPL-M453 are UL Recognized with 3750 Vrms for 1 minute per UL1577.

Part Number	Option RoHS Compliant	Option non RoHS Compliant	Package	Surface Mount	Tape & Reel	Quantity
HCPL-M452	-000E	no option	SO-5	X		100 per tube
HCPL-M453	-500E	#500		X	X	1500 per reel

To order, choose a part number from the part number column and combine with the desired option from the option column to form an order entry.

Example 1:
HCPL-M452-500E to order product of SO-5 Surface Mount package in Tape and Reel packaging and RoHS compliant.

Example 2:
HCPL-M452 to order product of SO-5 Surface Mount package in Tube packaging and non RoHS compliant.

Option datasheets are available. Contact your Avago sales representative or authorized distributor for information

Remarks: The notation '#XXX' is used for existing products, while (new) products launched since July 15, 2001 and RoHS compliant will use '–XXXE.'

Outline Drawing (JEDEC MO-155)

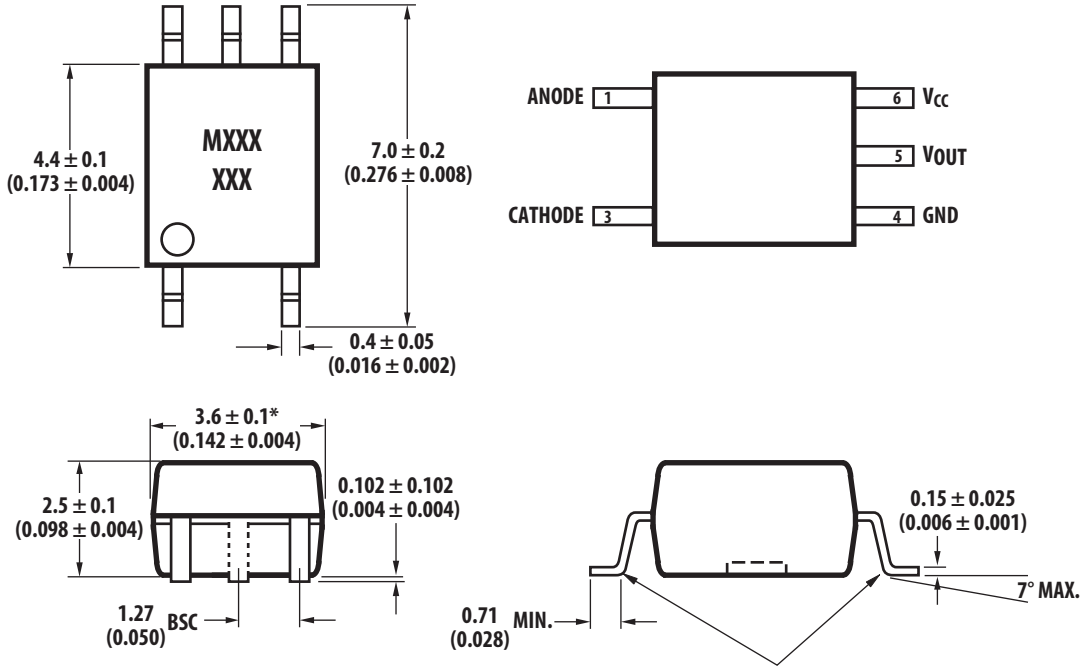

Dimensions in millimeters (inches)
* Maximum mold flash on each side is 0.15 mm (0.006)

Note: Foating lead protrusion is 0.15 mm (6 mils) max.

Schematic

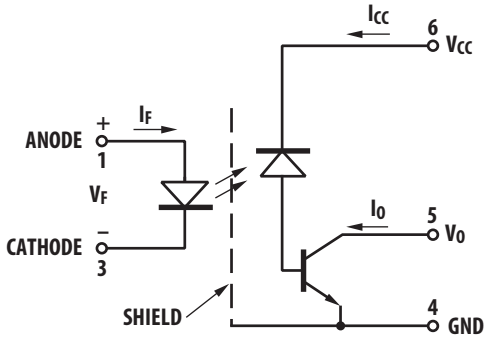

Land Pattern Recommendation

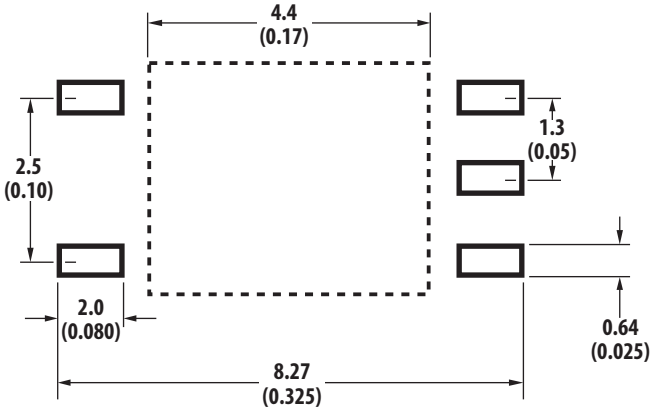

Dimensions in millimeters and (inches)

Solder Reflow Thermal Profile

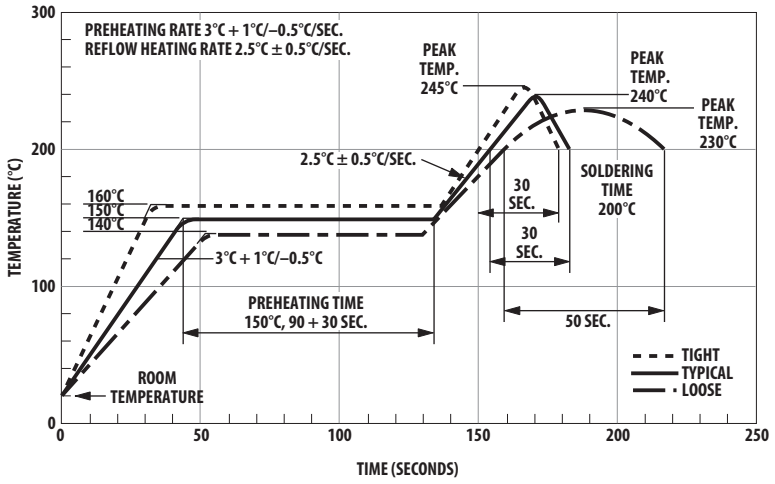

Note: Non-halide flux should be used.

Recommended Pb-Free IR Profile

Recommended reflow condition as per JEDEC Standard, J-STD-020 (latest revision).

Non-Halide Flux should be used.

Regulatory Information

The HCPL-M452/M453 are approved by the following organizations:

UL

Approved under UL 1577, component recognition program up to V_{ISO} = 3750 V_{RMS} expected prior to product release.

CSA

Approved under CSA Component Acceptance Notice #5.

Insulation Related Specifications

Parameter	Symbol	Value	Units	Conditions
Min External Air Gap (Clearance)	L(IO1)	≥ 5	mm	Measured from input terminals to output terminals
Min. External Tracking Path (Creepage)	L(IO2)	≥ 5	mm	Measured from input terminals to output terminals
Min. Internal Plastic Gap (Clearance)		0.08	mm	Through insulation distance conductor to conductor
Tracking Resistance	CTI	175	V	DIN IEC 112/VDE 0303 Part 1
Isolation Group (per DIN VDE 0109)		IIIa		Material Group DIN VDE 0109

Absolute Maximum Ratings

(No Derating Required up to 85°C)

Storage Temperature ..... -55°C to +125°C
Operating Temperature ..... -55°C to +100°C
Average Input Current - I_F ..... 25 mA[1]
Peak Input Current - I_F ..... 50 mA[2]
(50% duty cycle, 1 ms pulse width)
Peak Transient Input Current - I_F ..... 1.0 A
(1 µs pulse width, 300 pps)
Reverse Input Voltage - V_R (Pin3-1) ..... 5 V
Input Power Dissipation ..... 45 mW[3]
Average Output Current - I_O (Pin 5) ..... 8 mA
Peak Output Current ..... 16 mA
Output Voltage - V_O (Pin 5-4) ..... -0.5 V to 20 V
Supply Voltage - V_{CC} (Pin 6-4) ..... -0.5 V to 30 V
Output Power Dissipation ..... 100 mW[4]
Infrared and Vapor Phase Reflow Temperature ..... see below

Electrical Specifications

Over recommended temperature (T_A = 0°C to 70°C) unless otherwise specified. (See note 11.)

Parameter	Symbol	Min.	Typ.*	Max.	Units	Test Conditions			Fig.	Note
Current Transfer Ratio	CTR	20	24	50	%	T_A = 25°C	V_O = 0.4 V	V_{CC} = 4.5 V, I_F = 16 mA	1, 2, 4	5
		15	25				V_O = 0.5 V			
Logic Low Output Voltage	V_{OL}		0.1	0.4	V	T_A = 25°C	I_O = 3.0 mA			
				0.5			I_O = 2.4 mA			
Logic High Output Current	I_{OH}		0.003	0.5	µA	T_A = 25°C	$V_O = V_{CC}$ = 5.5 V	I_F = 0 mA	7	
			0.01	1		T_A = 25°C	$V_O = V_{CC}$ = 15.0 V			
				50						
Logic Low Supply Current	I_{CCL}		50	200		I_F = 16 mA, V_O = Open, V_{CC} = 15 V				11
Logic High Supply Current	I_{CCH}		0.02	1		T_A = 25°C	I_F = 0 mA, V_O = Open, V_{CC} = 15.0 V			11
				2						
Input Forward Voltage	V_F		1.5	1.7	V	T_A = 25°C	I_F = 16 mA		3	
				1.8						
Input Reverse Breakdown Voltage	BV_R	5				I_R = 10 µA				
Temperature Coefficient of Forward Voltage	$\Delta V_F / \Delta T_A$		-1.6		mV/°C	I_F = 16 mA				
Input Capacitance	C_{IN}		60		pF	f = 1 MHz, V_F = 0				
Input-Output Insulation	V_{ISO}	3750			V_{RMS}	RH ≤ 50%, t = 1 min., T_A = 25°C				6, 7
Resistance (Input-Output)	R_{I-O}		10^{12}		Ω	V_{I-O} = 500 V_{DC}				6
Capacitance (Input-Output)	C_{I-O}		0.6		pF	f = 1 MHz				6

* All typicals at T_A = 25°C.

Switching Specifications

Over recommended temperature (T_A = 0°C to 70°C) V_{CC} = 5 V, I_F = 16 mA unless otherwise specified.

Parameter	Symbol	Device	Min.	Typ.*	Max.	Units	Test Conditions		Fig.	Note
Propagation Delay Time to Logic Low at Output	t_{PHL}			0.2	0.8	µs	T_A = 25°C	R_L = 1.9 kΩ	5, 6, 10	9
					1.0					
Propagation Delay Time to Logic High at Output	t_{PLH}			0.6	0.8		T_A = 25°C	R_L = 1.9 kΩ	5, 6, 10	9
					1.0					
Common Mode Transient Immunity at Logic High Level Output	$\|CM_H\|$	HCPL-M452		1		kV/µs	V_{CM} = 10 V_{p-p}	I_F = 0 mA, T_A = 25°C, R_L = 1.9 kΩ	11	8, 9
		HCPL-M453	15	30			V_{CM} = 1500 V_{p-p}			
Common Mode Transient Immunity at Logic Low Level Output	$\|CM_L\|$	HCPL-M452		1			V_{CM} = 10 V_{p-p}	I_F = 16 mA, T_A = 25°C, R_L = 1.9 kΩ	11	8, 9
		HCPL-M453	15	30			V_{CM} = 1500 V_{p-p}			
Bandwidth	BW			3		MHz	R_L = 100 Ω, See Test Circuit		8, 9	10

All typicals at T_A = 25°C.

Notes:
1. Derate linearly above 85°C free-air temperature at a rate of 0.5 mA/°C.
2. Derate linearly above 85°C free-air temperature at a rate of 1.0 mA/°C.
3. Derate linearly above 85°C free-air temperature at a rate of 1.1 mW/°C.
4. Derate linearly above 85°C free-air temperature at a rate of 2.3 mW/°C.
5. CURRENT TRANSFER RATIO in percent is defined as the ratio of output collector current, I_O, to the forward LED input current, I_F, times 100.
6. Device considered a two terminal device: pins 1 and 3 shorted together, and pins 4, 5 and 6 shorted together.
7. In accordance with UL 1577, each optocoupler is proof tested by applying an insulation test voltage ≥ 4500 V_{RMS} for 1 second (leakage detection current limit, $I_{I-O} \leq 5$ µA).
8. Common transient immunity in a Logic High level is the maximum tolerable (positive) dV_{CM}/dt on the rising edge of the common mode pulse, V_{CM}, to assure that the output will remain in a Logic High state (i.e., $V_O > 2.0$ V). Common mode transient immunity in a Logic Low level is the maximum tolerable (negative) dV_{CM}/dt on the falling edge of the common mode pulse signal, V_{CM} to assure that the output will remain in a Logic Low state (i.e., $V_O < 0.8$ V).
9. The 1.9 kΩ load represents 1 TTL unit load of 1.6 mA and the 5.6 kΩ pull-up resistor.
10. The frequency at which the ac output voltage is 3 dB below its mid-frequency value.
11. Use of a 0.1 µF bypass capacitor connected between pins 4 and 6 is recommended.

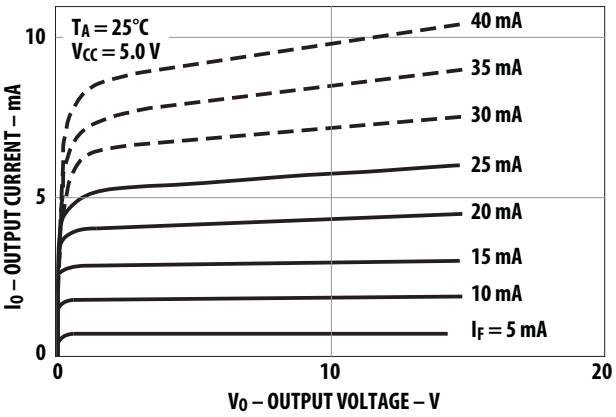

Figure 1. dc and Pulsed Transfer Characteristics.

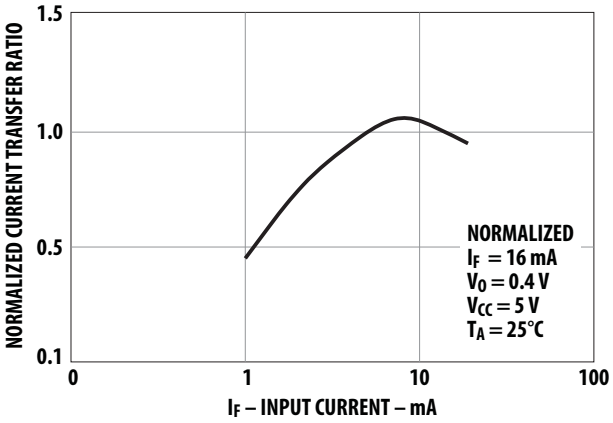

Figure 2. Current Transfer Ratio vs. Input Current.

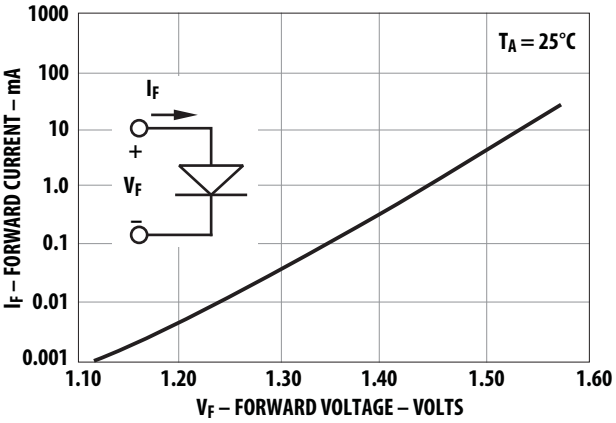

Figure 3. Input Current vs. Forward Voltage.

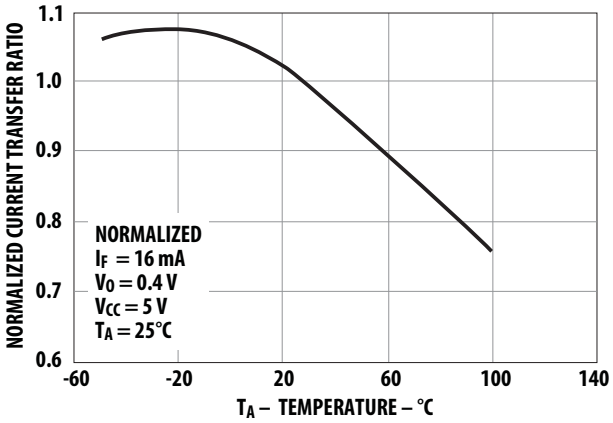

Figure 4. Current Transfer Ratio vs. Temperature.

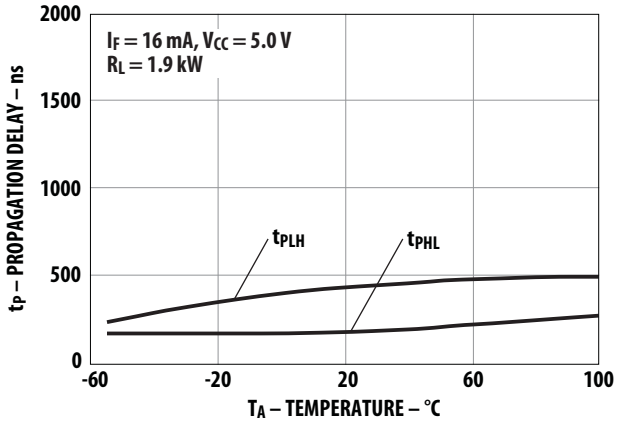

Figure 5. Propagation Delay vs. Temperature.

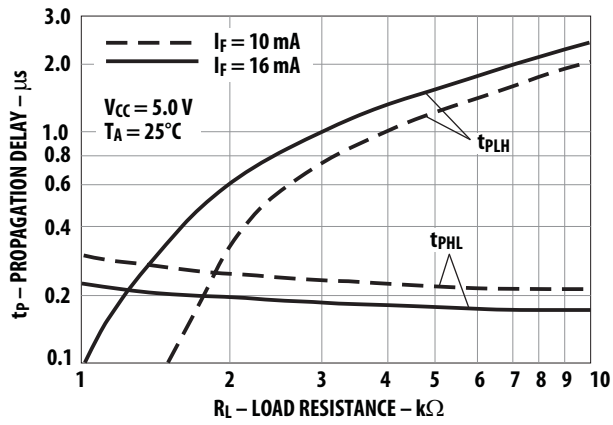

Figure 6. Propagation Delay Time vs. Load Resistance.

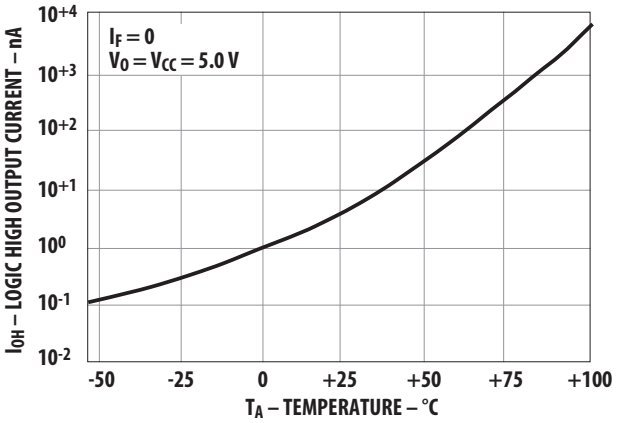

Figure 7. Logic High Output Current vs. Temperature.

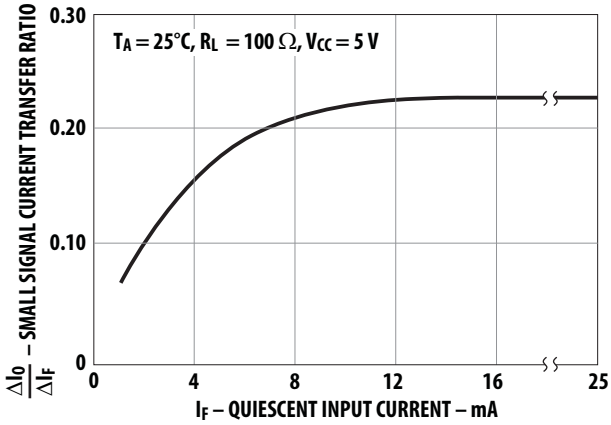

Figure 8. Small-Signal Current Transfer Ratio vs. Quiescent Input Current.

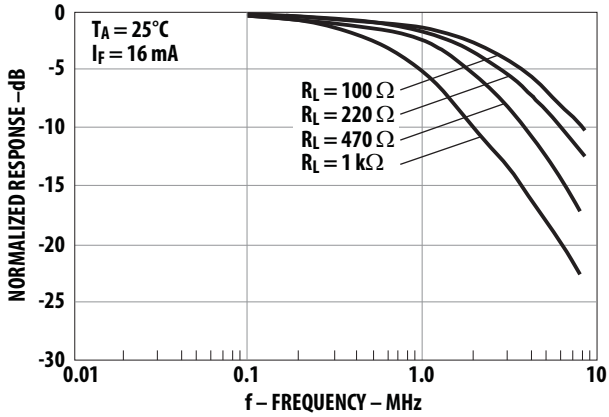

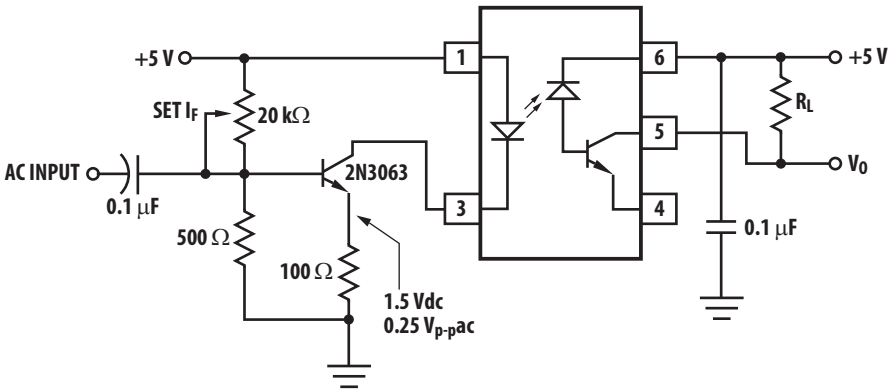

Figure 9. Frequency Response.

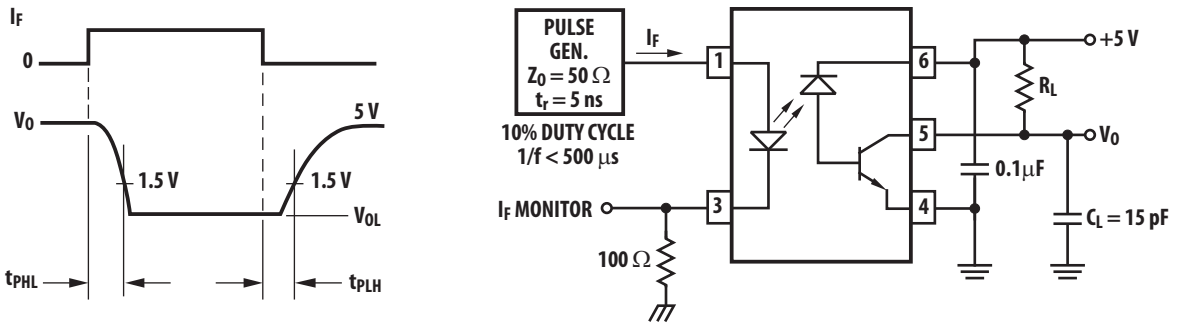

Figure 10. Switching Test Circuit.

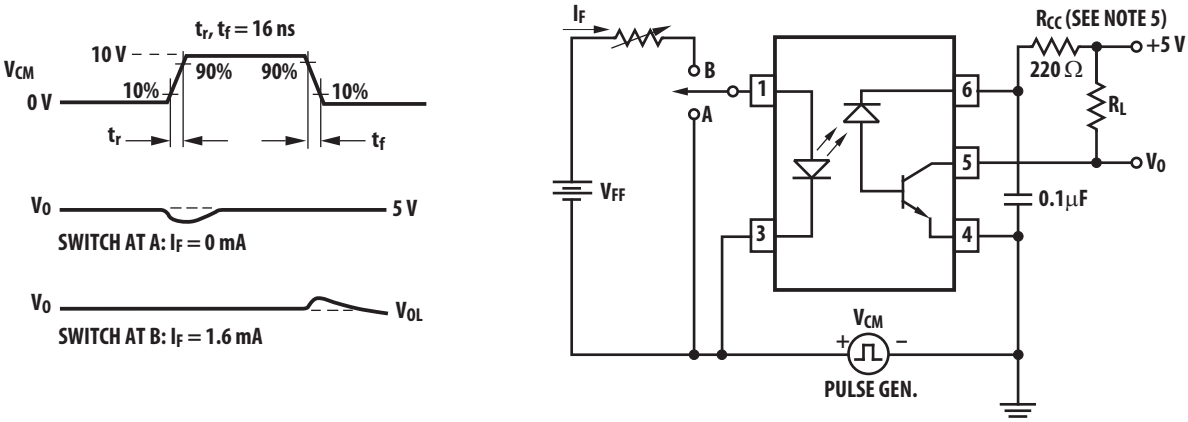

Figure 11. Test Circuit for Transient Immunity and Typical Waveforms.

For product information and a complete list of distributors, please go to our web site: **www.avagotech.com**

Avago, Avago Technologies, and the A logo are trademarks of Avago Technologies in the United States and other countries.
Data subject to change. Copyright © 2005-2010 Avago Technologies. All rights reserved. Obsoletes AV01-0554EN
AV02-1968EN - February 8, 2010