FAIRCHILD SEMICONDUCTOR®

July 2005

Single-channel: 6N137, HCPL-2601, HCPL-2611 Dual-Channel: HCPL-2630, HCPL-2631 High Speed-10 MBit/s Logic Gate Optocouplers

Features

- Very high speed-10 MBit/s
- Superior CMR-10 kV/µs
- Double working voltage-480V
- Fan-out of 8 over -40°C to +85°C
- Logic gate output
- Strobable output
- Wired OR-open collector
- U.L. recognized (File # E90700)

Applications

- Ground loop elimination
- LSTTL to TTL, LSTTL or 5-volt CMOS
- Line receiver, data transmission
- Data multiplexing
- Switching power supplies
- Pulse transformer replacement
- Computer-peripheral interface

Description

The 6N137, HCPL-2601/2611 single-channel and HCPL-2630/2631 dual-channel optocouplers consist of a 850 nm AlGaAS LED, optically coupled to a very high speed integrated photodetector logic gate with a strobable output. This output features an open collector, thereby permitting wired OR outputs. The coupled parameters are guaranteed over the temperature range of -40°C to +85°C. A maximum input signal of 5 mA will provide a minimum output sink current of 13mA (fan out of 8).

An internal noise shield provides superior common mode rejection of typically 10kV/µs. The HCPL- 2601 and HCPL- 2631 has a minimum CMR of 5 kV/µs. The HCPL-2611 has a minimum CMR of 10 kV/µs.

Package

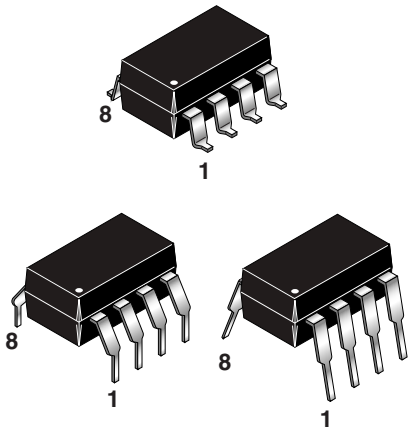

Schematic

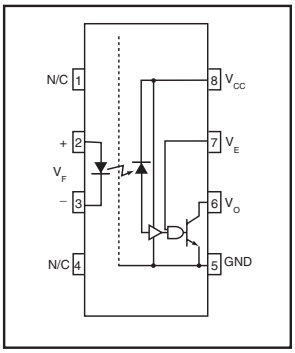

6N137
HCPL-2601
HCPL-2611

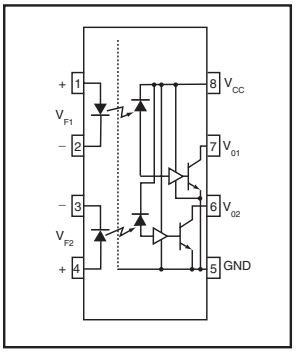

HCPL-2630
HCPL-2631

Truth Table (Positive Logic)

Input	Enable	Output
H	H	L
L	H	H
H	L	H
L	L	H
H	NC	L
L	NC	H

A 0.1µF bypass capacitor must be connected between pins 8 and 5. (See note 1)

©2005 Fairchild Semiconductor Corporation

Absolute Maximum Ratings (T_A = 25°C unless otherwise specified)

Parameter		Symbol	Value	Units
Storage Temperature		T_{STG}	-55 to +125	°C
Operating Temperature		T_{OPR}	-40 to +85	°C
Lead Solder Temperature		T_{SOL}	260 for 10 sec	°C
EMITTER				
DC/Average Forward	Single Channel	I_F	50	mA
Input Current	Dual Channel (Each Channel)		30	
Enable Input Voltage Not to exceed V_{CC} by more than 500 mV	Single Channel	V_E	5.5	V
Reverse Input Voltage	Each Channel	V_R	5.0	V
Power Dissipation	Single Channel	P_I	100	mW
	Dual Channel (Each Channel)		45	
DETECTOR				
Supply Voltage		V_{CC} (1 minute max)	7.0	V
Output Current	Single Channel	I_O	50	mA
	Dual Channel (Each Channel)		50	
Output Voltage	Each Channel	V_O	7.0	V
Collector Output	Single Channel	P_O	85	mW
Power Dissipation	Dual Channel (Each Channel)		60	

Recommended Operating Conditions

Parameter	Symbol	Min	Max	Units
Input Current, Low Level	I_{FL}	0	250	µA
Input Current, High Level	I_{FH}	*6.3	15	mA
Supply Voltage, Output	V_{CC}	4.5	5.5	V
Enable Voltage, Low Level	V_{EL}	0	0.8	V
Enable Voltage, High Level	V_{EH}	2.0	V_{CC}	V
Low Level Supply Current	T_A	-40	+85	°C
Fan Out (TTL load)	N		8	

*6.3mA is a guard banded value which allows for at least 20% CTR degradation. Initial input current threshold value is 5.0 mA or less.

Electrical Characteristics (T_A = 0 to 70°C Unless otherwise specified)
Individual Component Characteristics

Parameter		Test Conditions	Symbol	Min	Typ**	Max	Unit
EMITTER		(I_F = 10mA)	V_F			1.8	V
Input Forward Voltage		T_A = 25°C			1.4	1.75	
Input Reverse Breakdown Voltage		(I_R = 10μA)	B_{VR}	5.0			V
Input Capacitance		(V_F = 0, f = 1 MHz)	C_{IN}		60		pF
Input Diode Temperature Coefficient		(I_F = 10mA)	$\Delta V_F/\Delta T_A$		-1.4		mV/°C
DETECTOR							
High Level Supply Current	Single Channel	(V_{CC} = 5.5 V, I_F = 0 mA)	I_{CCH}		7	10	mA
	Dual Channel	(V_E = 0.5V)			10	15	
Low Level Supply Current	Single Channel	(V_{CC} = 5.5 V, I_F = 10 mA)	I_{CCL}		9	13	mA
	Dual Channel	(V_E = 0.5V)			14	21	
Low Level Enable Current		(V_{CC} = 5.5 V, V_E = 0.5V)	I_{EL}		-0.8	-1.6	mA
High Level Enable Current		(V_{CC} = 5.5 V, V_E = 2.0V)	I_{EH}		-0.6	-1.6	mA
High Level Enable Voltage		(V_{CC} = 5.5 V, I_F = 10 mA)	V_{EH}	2.0			V
Low Level Enable Voltage		(V_{CC} = 5.5 V, I_F = 10 mA)(Note 3)	V_{EL}			0.8	V

Switching Characteristics (T_A = -40°C to +85°C, V_{CC} = 5 V, I_F = 7.5 mA Unless otherwise specified)

AC Characteristics	Test Conditions	Symbol	Min	Typ**	Max	Unit
Propagation Delay Time to Output High Level	(Note 4) (T_A = 25°C)	T_{PLH}	20	45	75	ns
	(R_L = 350Ω, C_L = 15 pF) (Fig. 12)				100	
Propagation Delay Time to Output Low Level	(Note 5) (T_A = 25°C)	T_{PHL}	25	45	75	ns
	(R_L = 350Ω, C_L = 15 pF) (Fig. 12)				100	
Pulse Width Distortion	(R_L = 350Ω, C_L = 15 pF) (Fig. 12)	$\lvert T_{PHL} - T_{PLH} \rvert$		3	35	ns
Output Rise Time (10-90%)	(R_L = 350Ω, C_L = 15 pF) (Note 6) (Fig. 12)	t_r		50		ns
Output Rise Time (90-10%)	(R_L = 350Ω, C_L = 15 pF) (Note 7) (Fig. 12)	t_f		12		ns
Enable Propagation Delay Time to Output High Level	(I_F = 7.5 mA, V_{EH} = 3.5 V) (R_L = 350Ω, C_L = 15 pF) (Note 8) (Fig. 13)	t_{ELH}		20		ns
Enable Propagation Delay Time to Output Low Level	(I_F = 7.5 mA, V_{EH} = 3.5 V) (R_L = 350Ω, C_L = 15 pF) (Note 9) (Fig. 13)	t_{EHL}		20		ns
Common Mode Transient Immunity (at Output High Level)	(T_A = 25°C) $\lvert V_{CM} \rvert$ = 50V, (Peak) (I_F = 0 mA, V_{OH} (Min.) = 2.0V)	$\lvert CM_H \rvert$				V/μs
	6N137, HCPL-2630 (R_L = 350Ω) (Note 10)			10,000		
	HCPL-2601, HCPL-2631 (Fig. 14)		5000	10,000		
	HCPL-2611 $\lvert V_{CM} \rvert$ = 400V		10,000	15,000		
Common Mode Transient Immunity (at Output Low Level)	(R_L = 350Ω) (I_F = 7.5 mA, V_{OL} (Max.) = 0.8V	$\lvert CM_L \rvert$		10,000		V/μs
	6N137, HCPL-2630 $\lvert V_{CM} \rvert$ = 50V (Peak)					
	HCPL-2601, HCPL-2631 (T_A = 25°C)(Note 11)(Fig. 14)		5000	10,000		
	HCPL-2611(T_A = 25°C) $\lvert V_{CM} \rvert$ = 400V		10,000	15,000		

Transfer Characteristics (T_A = -40 to +85°C Unless otherwise specified)

DC Characteristics	Test Conditions	Symbol	Min	Typ**	Max	Unit
High Level Output Current	(V_{CC} = 5.5 V, V_O = 5.5 V) (I_F = 250 µA, V_E = 2.0 V) (Note 2)	I_{OH}			100	µA
Low Level Output Current	(V_{CC} = 5.5 V, I_F = 5 mA) (V_E = 2.0 V, I_{CL} = 13 mA) (Note 2)	V_{OL}		.35	0.6	V
Input Threshold Current	(V_{CC} = 5.5 V, V_O = 0.6 V, V_E = 2.0 V, I_{OL} = 13 mA)	I_{FT}		3	5	mA

Isolation Characteristics (T_A = -40°C to +85°C Unless otherwise specified.)

Characteristics	Test Conditions	Symbol	Min	Typ**	Max	Unit
Input-Output Insulation Leakage Current	(Relative humidity = 45%) (T_A = 25°C, t = 5 s) (V_{I-O} = 3000 VDC) (Note 12)	I_{I-O}			1.0*	µA
Withstand Insulation Test Voltage	(RH < 50%, T_A = 25°C) (Note 12) (t = 1 min.)	V_{ISO}	2500			V_{RMS}
Resistance (Input to Output)	(V_{I-O} = 500 V) (Note 12)	R_{I-O}		10^{12}		Ω
Capacitance (Input to Output)	(f = 1 MHz) (Note 12)	C_{I-O}		0.6		pF

** All Typicals at V_{CC} = 5V, T_A = 25°C

NOTES

1. The V_{CC} supply to each optoisolator must be bypassed by a 0.1µF capacitor or larger. This can be either a ceramic or solid tantalum capacitor with good high frequency characteristic and should be connected as close as possible to the package V_{CC} and GND pins of each device.
2. Each channel.
3. Enable Input - No pull up resistor required as the device has an internal pull up resistor.
4. t_{PLH} -Propagation delay is measured from the 3.75 mA level on the HIGH to LOW transition of the input current pulse to the 1.5 V level on the LOW to HIGH transition of the output voltage pulse.
5. t_{PHL} -Propagation delay is measured from the 3.75 mA level on the LOW to HIGH transition of the input current pulse to the 1.5 V level on the HIGH to LOW transition of the output voltage pulse.
6. t_r -Rise time is measured from the 90% to the 10% levels on the LOW to HIGH transition of the output pulse.
7. t_f -Fall time is measured from the 10% to the 90% levels on the HIGH to LOW transition of the output pulse.
8. t_{ELH} -Enable input propagation delay is measured from the 1.5 V level on the HIGH to LOW transition of the input voltage pulse to the 1.5 V level on the LOW to HIGH transition of the output voltage pulse.
9. t_{EHL} -Enable input propagation delay is measured from the 1.5 V level on the LOW to HIGH transition of the input voltage pulse to the 1.5 V level on the HIGH to LOW transition of the output voltage pulse.
10. CM_H -The maximum tolerable rate of rise of the common mode voltage to ensure the output will remain in the high state (i.e., V_{OUT} > 2.0 V). Measured in volts per microsecond (V/µs).
11. CM_L -The maximum tolerable rate of rise of the common mode voltage to ensure the output will remain in the low output state (i.e., V_{OUT} < 0.8 V). Measured in volts per microsecond (V/µs).
12. Device considered a two-terminal device: Pins 1,2,3 and 4 shorted together, and Pins 5,6,7 and 8 shorted together.

Fig.1 Low Level Output Voltage vs. Ambient Temperature

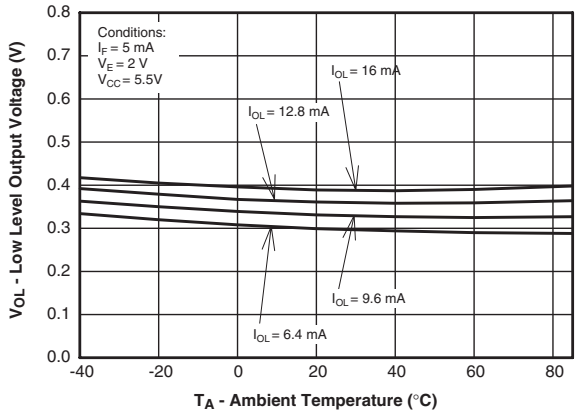

Fig. 2 Input Diode Forward Voltage vs. Forward Current

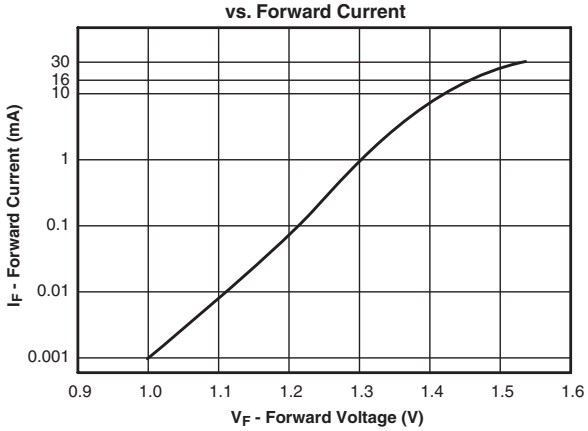

Fig.3 Switching Time vs. Forward Current

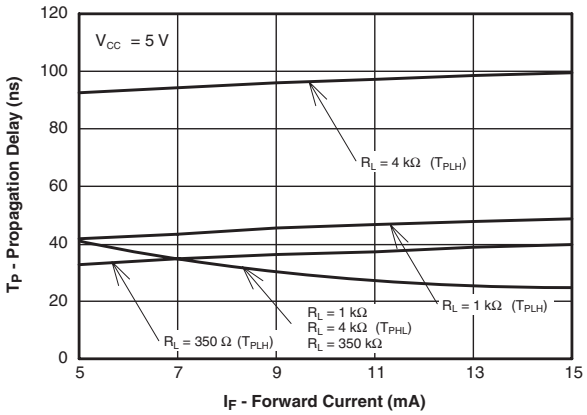

Fig. 4 Low Level Output Current vs. Ambient Temperature

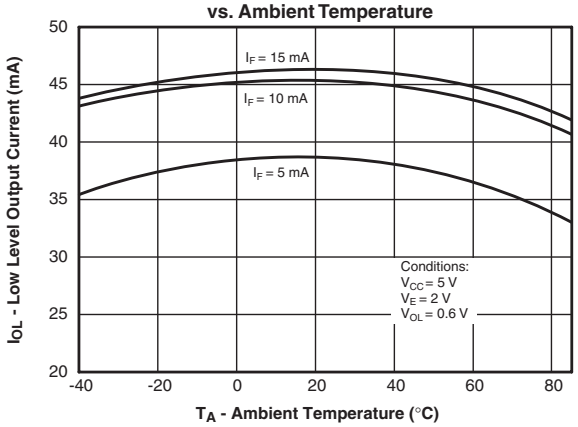

Fig. 5 Input Threshold Current vs. Ambient Temperature

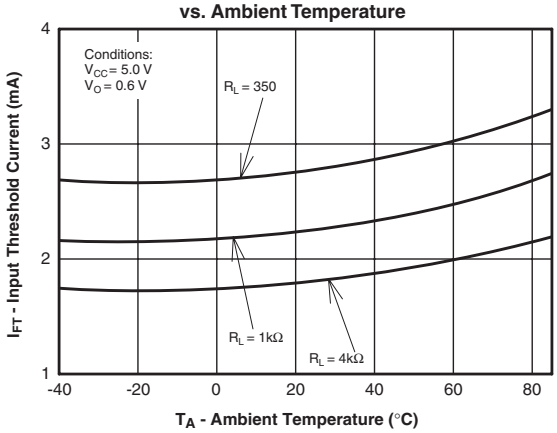

Fig. 6 Output Voltage vs. Input Forward Current

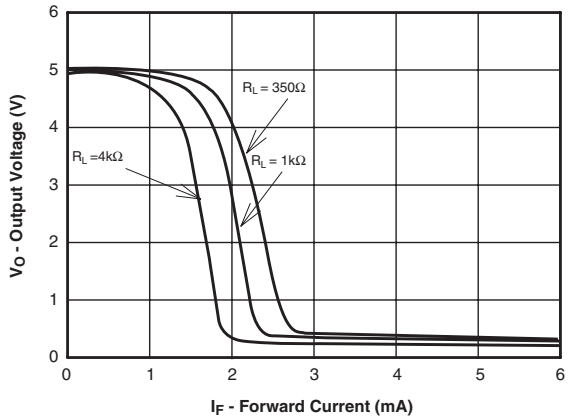

Fig. 7 Pulse Width Distortion vs. Temperature

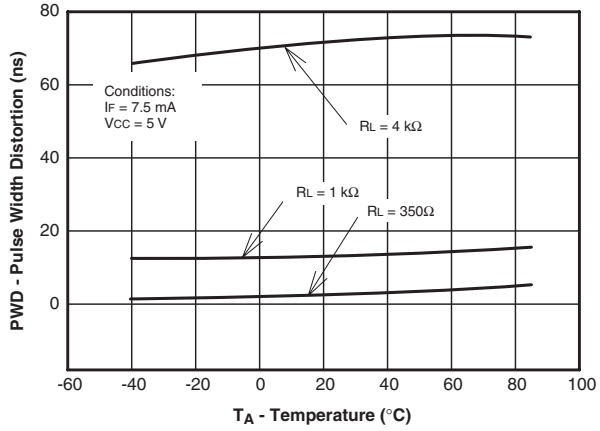

Fig. 8 Rise and Fall Time vs. Temperature

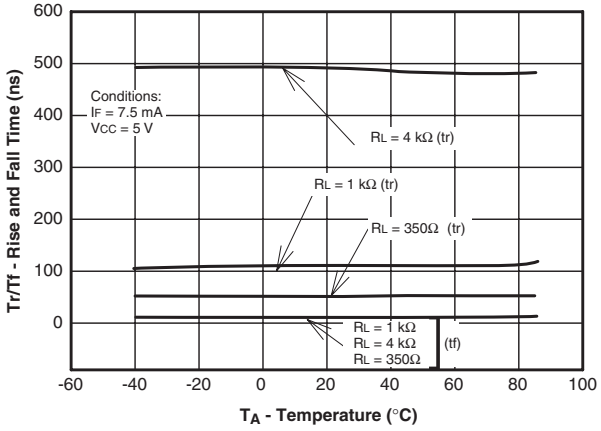

Fig. 9 Enable Propagation Delay vs. Temperature

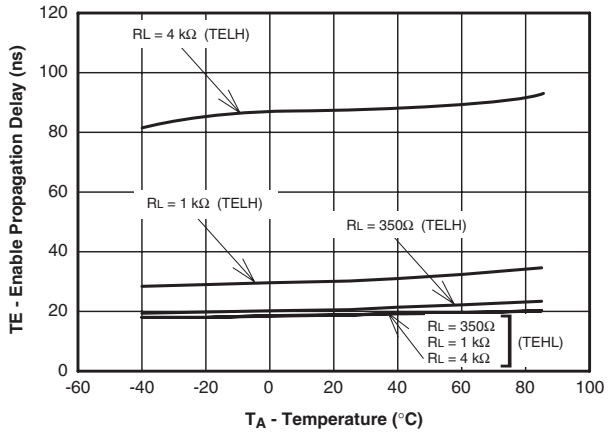

Fig. 10 Switching Time vs. Temperature

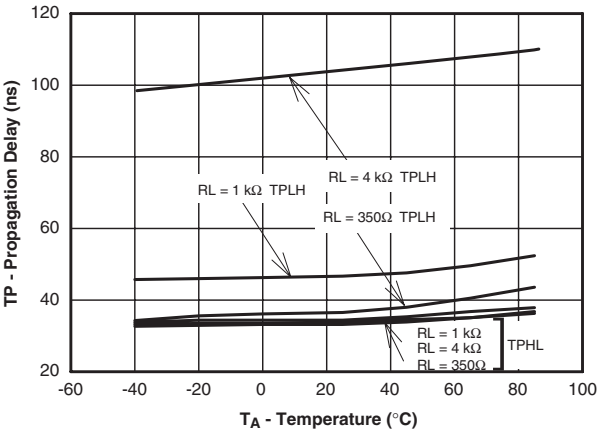

Fig. 11 High Level Output Current vs. Temperature

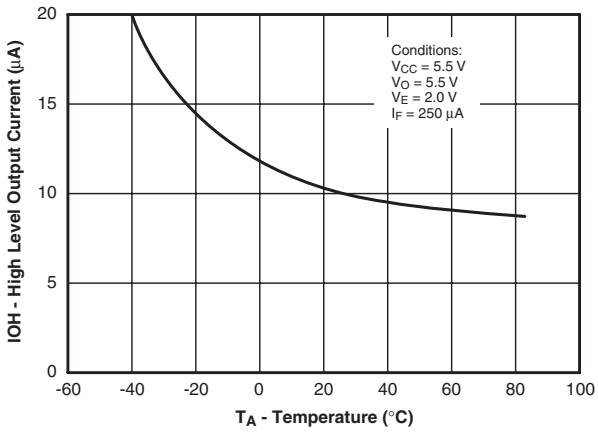

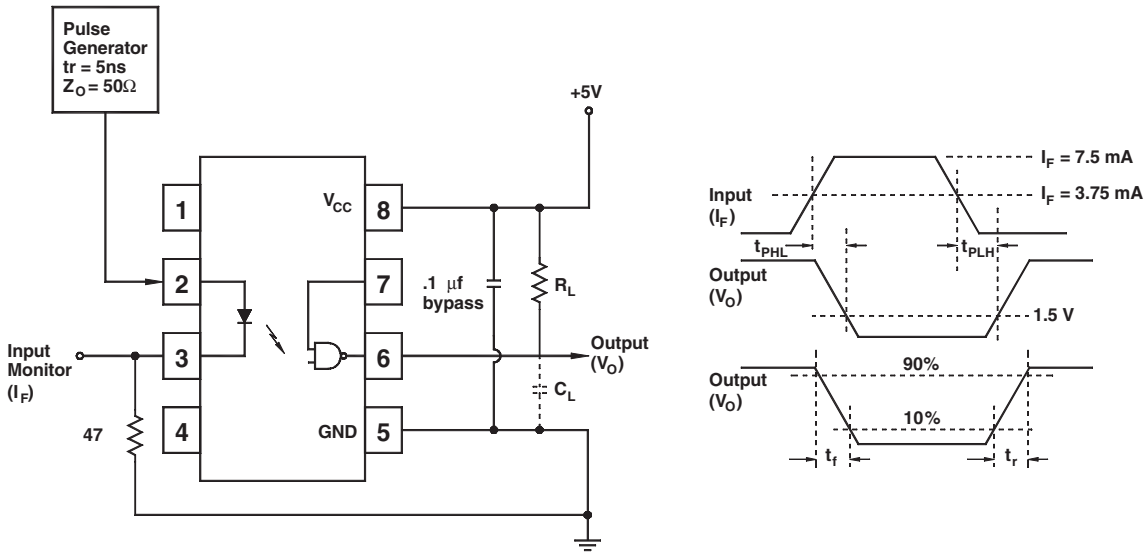

Fig. 12 Test Circuit and Waveforms for t_{PLH}, t_{PHL}, t_r and t_f.

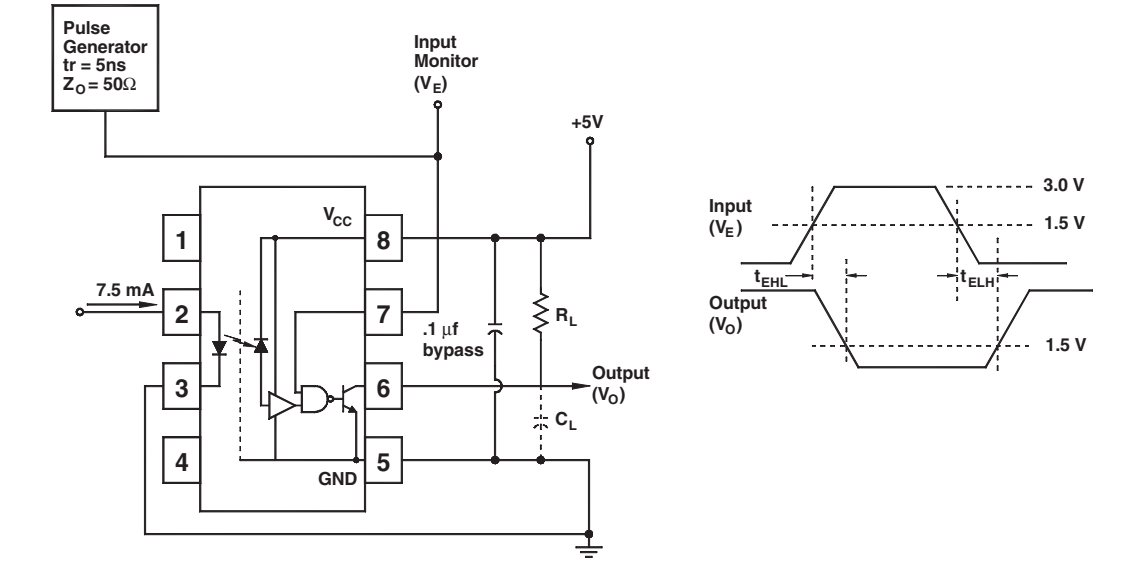

Fig. 13 Test Circuit t_{EHL} and t_{ELH}.

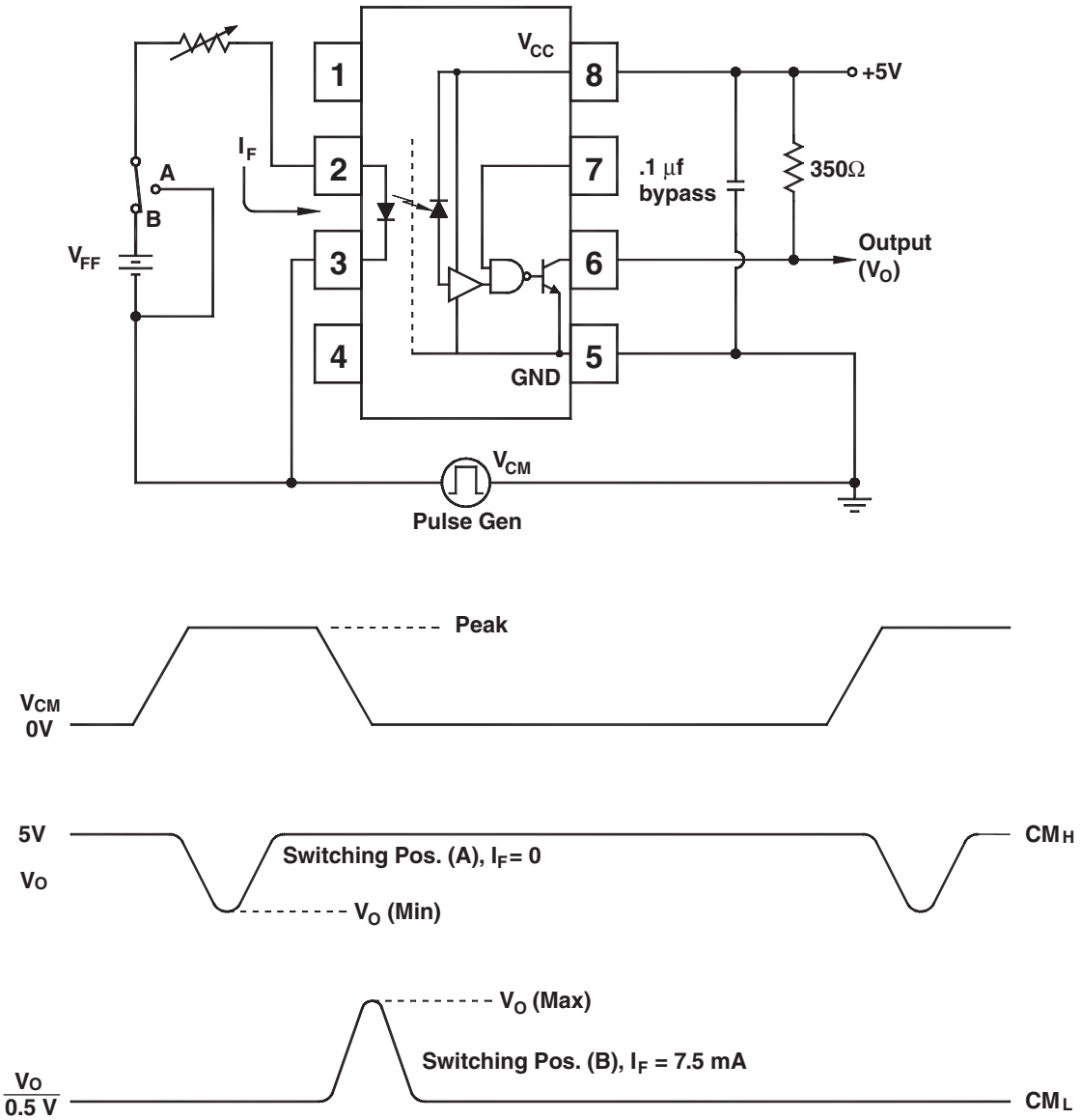

Fig. 14 Test Circuit Common Mode Transient Immunity

Package Dimensions (Through Hole)

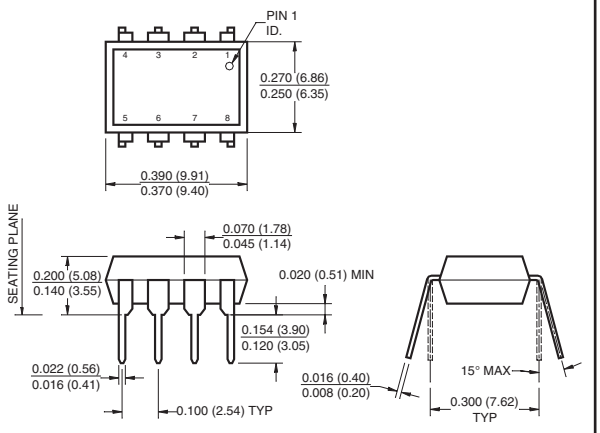

Package Dimensions (Surface Mount)

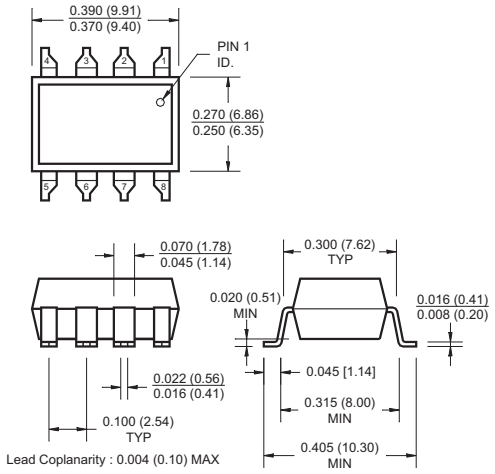

Package Dimensions (0.4"Lead Spacing)

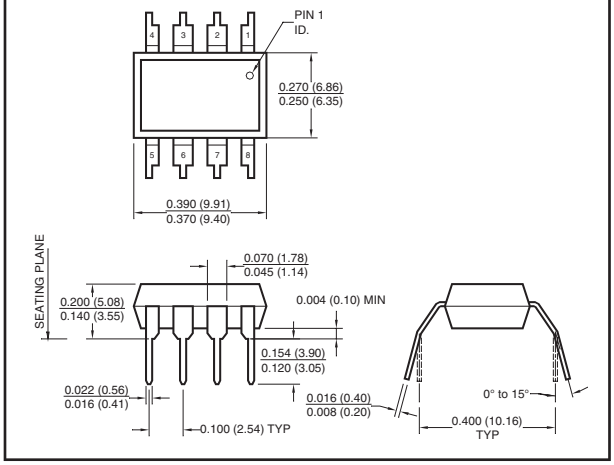

Recommended Pad Layout for Surface Mount Leadform

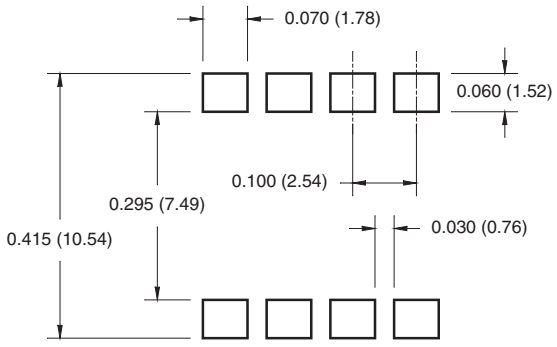

NOTE
All dimensions are in inches (millimeters)

Ordering Information

Option	Example Part Number	Description
S	6N137S	Surface Mount Lead Bend
SD	6N137SD	Surface Mount; Tape and reel
W	6N137W	0.4" Lead Spacing
V	6N137V	VDE0884
TV	6N137TV	VDE0884; 0.4” lead spacing
SV	6N137SV	VDE0884; surface mount
SDV	6N137SDV	VDE0884; surface mount; tape and reel

QT Carrier Tape Specifications (“D” Taping Orientation)

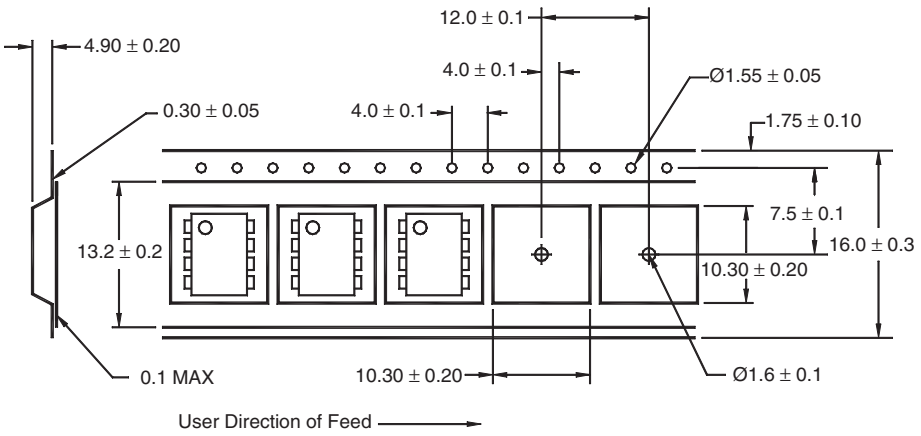

Marking Information

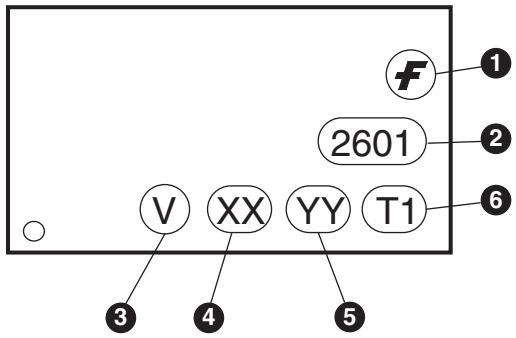

Definitions	
1	Fairchild logo
2	Device number
3	VDE mark (Note: Only appears on parts ordered with VDE option – See order entry table)
4	Two digit year code, e.g., '03'
5	Two digit work week ranging from '01' to '53'
6	Assembly package code

Reflow Profile

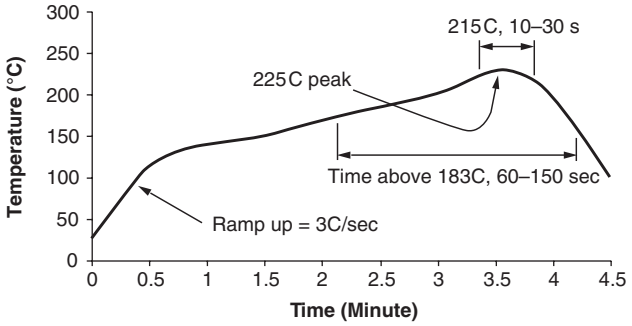

- Peak reflow temperature: 225C (package surface temperature)
- Time of temperature higher than 183C for 60–150 seconds
- One time soldering reflow is recommended

TRADEMARKS

The following are registered and unregistered trademarks Fairchild Semiconductor owns or is authorized to use and is not intended to be an exhaustive list of all such trademarks.

ACEx™
ActiveArray™
Bottomless™
Build it Now™
CoolFET™
CROSSVOLT™
DOME™
EcoSPARK™
E^2CMOS™
EnSigna™
FACT™
FACT Quiet Series™
FAST®
FASTr™
FPS™
FRFET™
GlobalOptoisolator™
GTO™
HiSeC™
I^2C™
i-Lo™
ImpliedDisconnect™
IntelliMAX™
ISOPLANAR™
LittleFET™
MICROCOUPLER™
MicroFET™
MicroPak™
MICROWIRE™
MSX™
MSXPro™
OCX™
OCXPro™
OPTOLOGIC®
OPTOPLANAR™
PACMAN™
POP™
Power247™
PowerEdge™
PowerSaver™
PowerTrench®
QFET®
QS™
QT Optoelectronics™
Quiet Series™
RapidConfigure™
RapidConnect™
μSerDes™
SILENT SWITCHER®
SMART START™
SPM™
Stealth™
SuperFET™
SuperSOT™-3
SuperSOT™-6
SuperSOT™-8
SyncFET™
TinyLogic®
TINYOPTO™
TruTranslation™
UHC™
UltraFET®
UniFET™
VCX™
Wire™

Across the board. Around the world.™
The Power Franchise®
Programmable Active Droop™

DISCLAIMER

FAIRCHILD SEMICONDUCTOR RESERVES THE RIGHT TO MAKE CHANGES WITHOUT FURTHER NOTICE TO ANY PRODUCTS HEREIN TO IMPROVE RELIABILITY, FUNCTION OR DESIGN. FAIRCHILD DOES NOT ASSUME ANY LIABILITY ARISING OUT OF THE APPLICATION OR USE OF ANY PRODUCT OR CIRCUIT DESCRIBED HEREIN; NEITHER DOES IT CONVEY ANY LICENSE UNDER ITS PATENT RIGHTS, NOR THE RIGHTS OF OTHERS.

LIFE SUPPORT POLICY

FAIRCHILD'S PRODUCTS ARE NOT AUTHORIZED FOR USE AS CRITICAL COMPONENTS IN LIFE SUPPORT DEVICES OR SYSTEMS WITHOUT THE EXPRESS WRITTEN APPROVAL OF FAIRCHILD SEMICONDUCTOR CORPORATION.
As used herein:

1. Life support devices or systems are devices or systems which, (a) are intended for surgical implant into the body, or (b) support or sustain life, or (c) whose failure to perform when properly used in accordance with instructions for use provided in the labeling, can be reasonably expected to result in significant injury to the user.

2. A critical component is any component of a life support device or system whose failure to perform can be reasonably expected to cause the failure of the life support device or system, or to affect its safety or effectiveness.

PRODUCT STATUS DEFINITIONS

Definition of Terms

Datasheet Identification	Product Status	Definition
Advance Information	Formative or In Design	This datasheet contains the design specifications for product development. Specifications may change in any manner without notice.
Preliminary	First Production	This datasheet contains preliminary data, and supplementary data will be published at a later date. Fairchild Semiconductor reserves the right to make changes at any time without notice in order to improve design.
No Identification Needed	Full Production	This datasheet contains final specifications. Fairchild Semiconductor reserves the right to make changes at any time without notice in order to improve design.
Obsolete	Not In Production	This datasheet contains specifications on a product that has been discontinued by Fairchild semiconductor. The datasheet is printed for reference information only.

Rev. I16