Rev	AWO #	Description	Date	Appr
-		RELEASED	11/26/10	

APPROVED: _____

DATE: _____ TITLE: _____

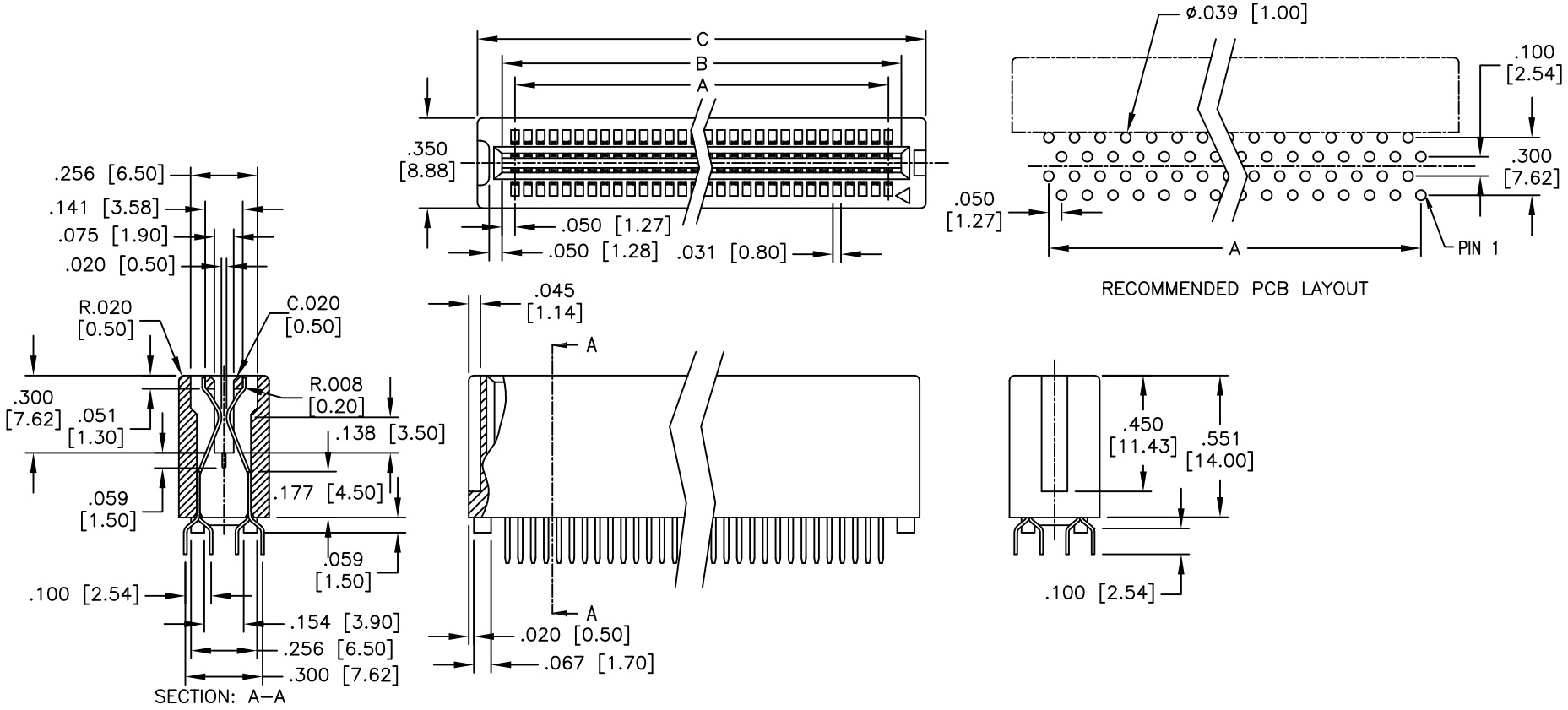

SPECIFICATIONS:
Material:
Insulator: Hi–temp PPS, rated UL 94V–0
Insulator color: Black
Contacts: Copper Alloy
Plating:
Gold flash over Nickel underplate on contact area,
Tin over Copper underplate on PCB tails
Electrical:
Operating voltage: 250 VAC RMS.
Current rating: 1 Amp.
Contact resistance: 30 mohms max.
Insulation resistance: 1000 Mohms min.
Dielectric withstanding voltage: 500 VAC for 1 minute
Temperature Rating:
Operating temperature: –55°C to +85°C
Environmental:
Lead free, RoHS complaint
Recommended soldering temp: 260°C for 5 seconds

RoHS COMPLIANT

Positions: 4, 6, 8, 10, 12, 14, 16, 18, 20, 22, 24, 26, 28, 30, 32, 34, 36, 38, 40, 42, 44, 46, 48, 50, 52, 54, 56, 58, 60, 80, 100, 120, 124, 160, 182
A = .050 [1.27] x No. of Spaces
B = A + .100 [2.54]
C = A + .290 [7.37]

UNLESS OTHERWISE SPECIFIED
ALL DIMENSIONS ARE INCHES [MM]
TOLERANCES: EXCEPT AS NOTED

INCHES		HOLES	
.X	± .10	Ø.X	±.10
.XX	± .020	Ø.XX	±.015
.XXX	± .015	Ø.XXX	±.010

APPROVALS		DATE
DRAWN	DY	11/26/10
CHECKED		
APPROVED		

ADAM TECH
909 Rahway Avenue, Union, NJ 07083
Phone: 908-687-5000 Fax: 908-687-5710

TITLE: .050 [1.27] PITCH CARD EDGE, PCB TYPE

SIZE	PART NO.	REV.
X	HCE-XX-G	-

REF:	SCALE:	SHEET
S00140T	NTS	1 OF 1