SGS-THOMSON MICROELECTRONICS

HCC/HCF4585B

4-BIT MAGNITUDE COMPARATOR

- EXPANSION TO 8, 12, 16 ... 4 N BITS BY CASCADING UNITS
- MEDIUM-SPEED OPERATION : COMPARES TWO 4-BIT WORDS IN 180ns (typ.) AT 10V
- STANDARDIZED SYMMETRICAL OUTPUT CHARACTERISTICS
- 5V, 10V, AND 15V PARAMETRIC RATINGS
- INPUT CURRENT OF 100nA AT 18V AND 25°C FOR HCC DEVICE
- 100% TESTED FOR QUIESCENT CURRENT
- MEETS ALL REQUIREMENTS OF JEDEC TENTATIVE STANDARD N° 13A, "STANDARD SPECIFICATIONS FOR DESCRIPTION OF "B" SERIES CMOS DEVICES"

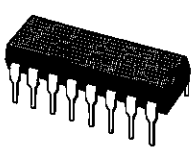

EY
(Plastic Package)

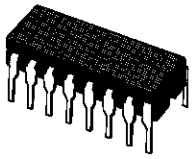

F
(Ceramic Frit Seal Package)

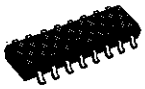

M1
(Micro Package)



C1
(Plastic Chip Carrier)

ORDER CODES :

HCC4585BF	HCF4585BM1
HCF4585BEY	HCF4585BC1

PIN CONNECTIONS

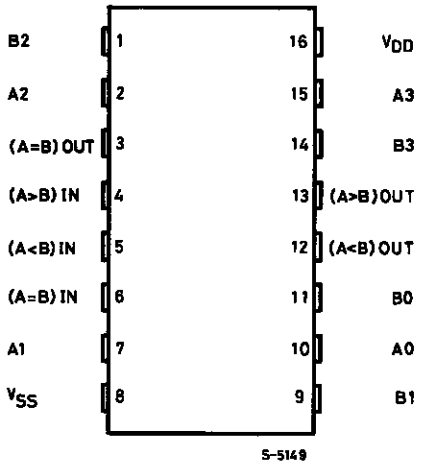

DESCRIPTION

The **HCC4585B** (extended temperature range) and **HCF4585B** (intermediate temperature range) are monolithic integrated circuits, available in 16-lead dual in-line plastic or ceramic package, and plastic micro package. The **HCC/HCF4585B** is a 4-bit magnitude comparator designed for use in computer and logic applications that require the comparison of two 4-bit words. This logic circuit determines whether one 4-bit word (Binary or BCD) is "less than", "equal to", or "greater than" a second 4-bit word. The **HCC/HCF4585B** has eight comparing inputs (A3, B3, through A0, B0), three outputs (A < B, A = B, A > B) and three cascading inputs (A < B, A = B, A > B) that permit systems designers to expand the comparator function to 8, 12, 16 ... 4 N bits. When a single **HCC/HCF4585B** is used, the cascading inputs are connected as follows : (A < B) = low, (A = B) = high, (A > B) = high. Cascading these units for comparison of more than 4 bits is accomplished as shown in typical application.

FUNCTIONAL DIAGRAM

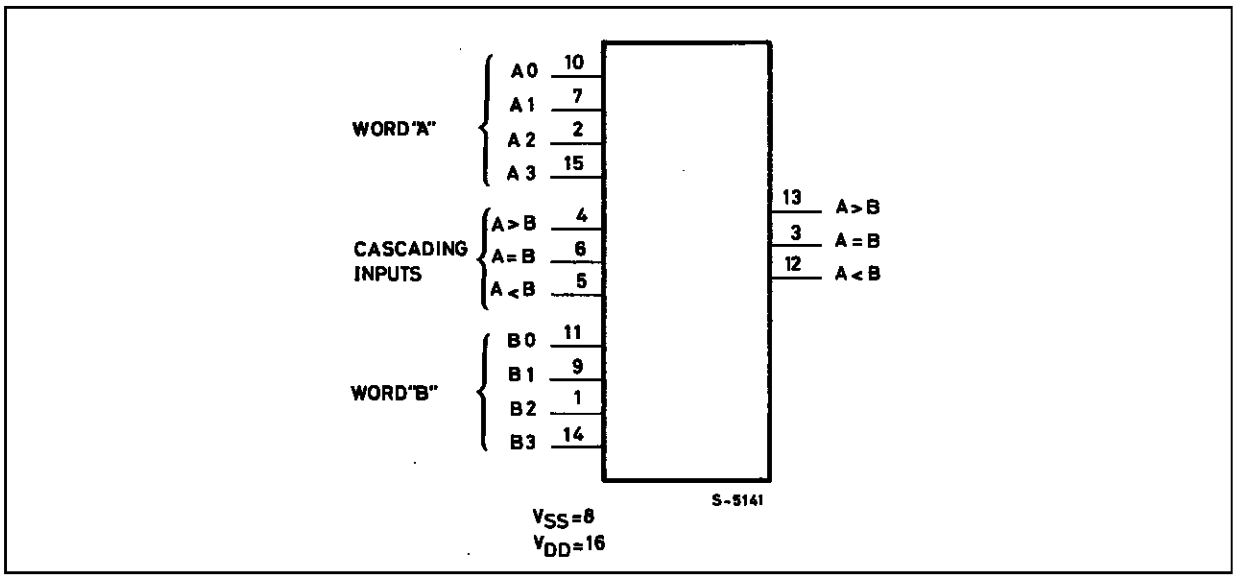

ABSOLUTE MAXIMUM RATINGS

Symbol	Parameter	Value	Unit
V_{DD}*	Supply Voltage : **HCC** Types **HCF** Types	– 0.5 to + 20 – 0.5 to + 18	V V
V_i	Input Voltage	– 0.5 to V_{DD} + 0.5	V
I_I	DC Input Current (any one input)	± 10	mA
P_{tot}	Total Power Dissipation (per package) Dissipation per Output Transistor for T_{op} = Full Package-temperature Range	200 100	mW mW
T_{op}	Operating Temperature : **HCC** Types **HCF** Types	– 55 to + 125 – 40 to + 85	°C °C
T_{stg}	Storage Temperature	– 65 to + 150	°C

Stresses above those listed under "Absolute Maximum Ratings" may cause permanent damage to the device. This is a stress rating only and functional operation of the device at these or any other conditions above those indicated in the operational sections of this specification is not implied. Exposure to absolute maximum rating conditions for external periods may affect device reliability.
* All voltages are with respect to V_{SS} (GND).

RECOMMENDED OPERATING CONDITIONS

Symbol	Parameter	Value	Unit
V_{DD}	Supply Voltage : **HCC** Types **HCF** Types	3 to 18 3 to 15	V V
V_I	Input Voltage	0 to V_{DD}	V
T_{op}	Operating Temperature : **HCC** Types **HCF** Types	– 55 to + 125 – 40 to + 85	°C °C

LOGIC DIAGRAM

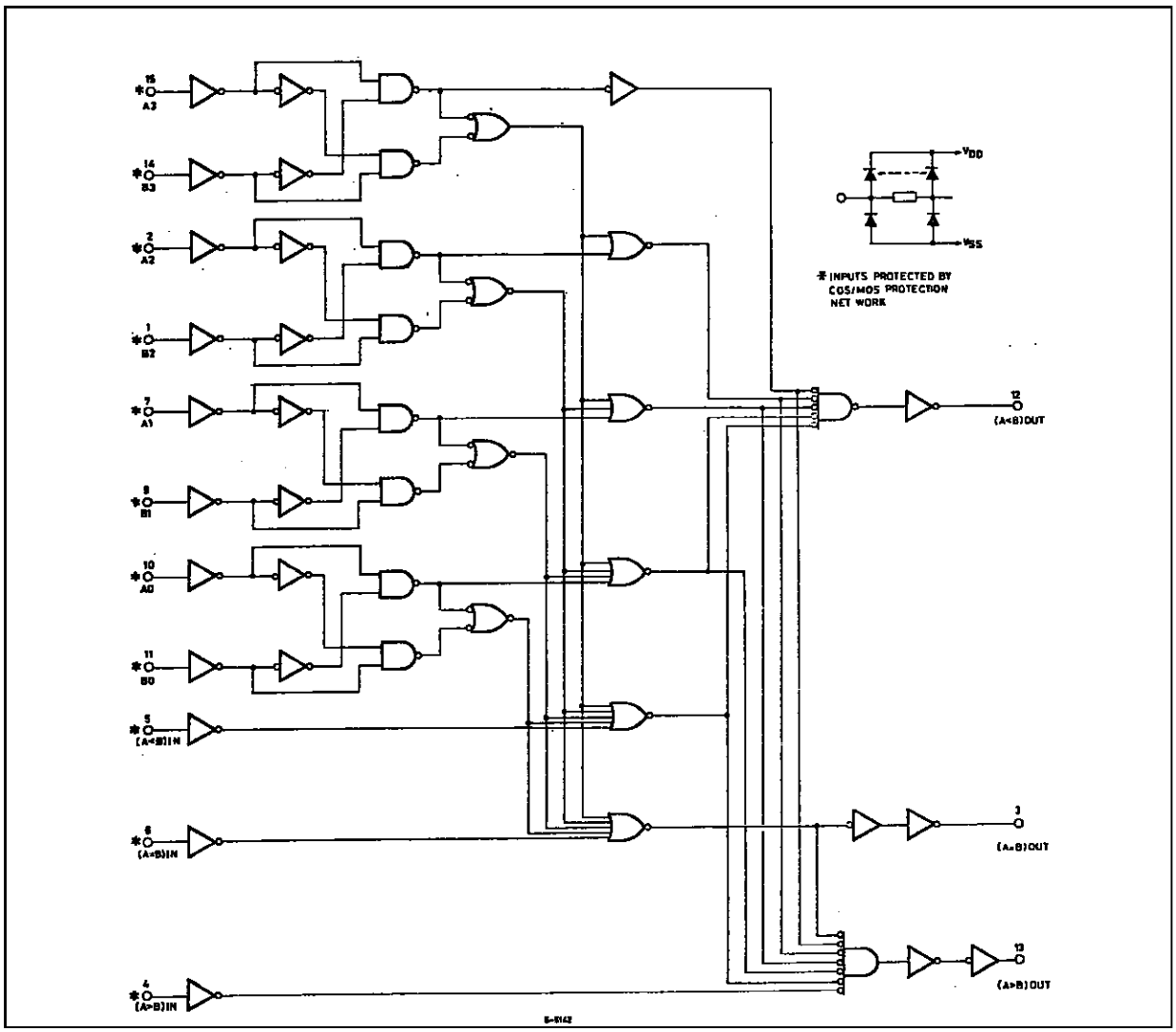

TRUTH TABLE

Inputs							Outputs		
Comparing				Cascading					
A3, B3	A2, B2	A1, B1	A0, B0	A < B	A = B	A > B	A < B	A =B	A > B
A3 > B3	X	X	X	X	X	1	0	0	1
A3 = B3	A2 > B2	X	X	X	X	1	0	0	1
A3 = B3	A2 = B2	A1 > B1	X	X	X	1	0	0	1
A3 = B3	A2 = B2	A1 = B1	A0 > B0	X	X	1	0	0	1
A3 = B3	A2 = B2	A1 = B1	A0 = B0	0	0	1	0	0	1
A3 = B3	A2 = B2	A1 = B1	A0 = B0	0	1	X	0	1	0
A3 = B3	A2 = B2	A1 = B1	A0 = B0	1	0	X	1	0	0
A3 = B3	A2 = B2	A1 = B1	A0 < B0	X	X	X	1	0	0
A3 = B3	A2 = B2	A1 < B1	X	X	X	X	1	0	0
A3 = B3	A2 < B2	X	X	X	X	X	1	0	0
A3 < B3	X	X	X	X	X	X	1	0	0

X = Don't Care

Logic 1 = High Level

STATIC ELECTRICAL CHARACTERISTICS (over recommended operating conditions)

Symbol	Parameter		Test Conditions				Value							Unit
			V_I (V)	V_O (V)	$\|I_O\|$ (μA)	V_{DD} (V)	T_{Low}*		25°C			T_{High}*		
							Min.	Max.	Min.	Typ.	Max.	Min.	Max.	
I_L	Quiescent Current	HCC Types	0/ 5			5		5		0.04	5		150	μA
			0/10			10		10		0.04	10		300	
			0/15			15		20		0.04	20		600	
			0/20			20		100		0.08	100		3000	
		HCF Types	0/ 5			5		20		0.04	20		150	
			0/10			10		40		0.04	40		300	
			0/15			15		80		0.04	80		600	
V_{OH}	Output High Voltage		0/ 5		< 1	5	4.95		4.95			4.95		V
			0/10		< 1	10	9.95		9.95			9.95		
			0/15		< 1	15	14.95		14.95			14.95		
V_{OL}	Output Low Voltage		5/0		< 1	5		0.05			0.05		0.05	V
			10/0		< 1	10		0.05			0.05		0.05	
			15/0		< 1	15		0.05			0.05		0.05	
V_{IH}	Input High Voltage			0.5/4.5	< 1	5	3.5		3.5			3.5		V
				1/9	< 1	10	7		7			7		
				1.5/13.5	< 1	15	11		11			11		
V_{IL}	Input Low Voltage			4.5/0.5	< 1	5		1.5			1.5		1.5	V
				9/1	< 1	10		3			3		3	
				13.5/1.5	< 1	15		4			4		4	
I_{OH}	Output Drive Current	HCC Types	0/ 5	2.5		5	– 2		– 1.6	– 3.2		– 1.15		mA
			0/ 5	4.6		5	– 0.64		– 0.51	– 1		– 0.36		
			0/10	9.5		10	– 1.6		– 1.3	– 2.6		– 0.9		
			0/15	13.5		15	– 4.2		– 3.4	– 6.8		– 2.4		
		HCF Types	0/ 5	2.5		5	– 1.53		– 1.36	– 3.2		– 1.1		
			0/ 5	4.6		5	– 0.52		– 0.44	– 1		– 0.36		
			0/10	9.5		10	– 1.3		– 1.1	– 2.6		– 0.9		
			0/15	13.5		15	– 3.6		– 3.0	– 6.8		– 2.4		
I_{OL}	Output Sink Current	HCC Types	0/ 5	0.4		5	0.64		0.51	1		0.36		mA
			0/10	0.5		10	1.6		1.3	2.6		0.9		
			0/15	1.5		15	4.2		3.4	6.8		2.4		
		HCF Types	0/ 5	0.4		5	0.52		0.44	1		0.36		
			0/10	0.5		10	1.3		1.1	2.6		0.9		
			0/15	1.5		15	3.6		3.0	6.8		2.4		
I_{IH}, I_{IL}	Input Leakage Current	HCC Types	0/18	Any Input		18		± 0.1		$\pm 10^{-5}$	± 0.1		± 1	μA
		HCF Types	0/15			15		± 0.3		$\pm 10^{-5}$	± 0.3		± 1	
C_I	Input Capacitance			Any Input						5	7.5			pF

* T_{Low} = – 55°C for **HCC** device : – 40°C for **HCF** device.
* T_{High} = + 125°C for **HCC** device : + 85°C for **HCF** device.
The Noise Margin for both "1" and "0" level is : 1V min. with V_{DD} = 5V, 2V min. with V_{DD} = 10V, 2.5V min. with V_{DD} = 15V.

DYNAMIC ELECTRICAL CHARACTERISTICS (T_{amb} = 25°C, C_L = 50pF, R_L = 200kΩ, typical temperature coefficient for all V_{DD} values is 0.3%/°C, all input rise and fall time = 20ns)

Symbol	Parameter	Test Conditions		Value			Unit
			V_{DD} (V)	Min.	Typ.	Max.	
t_{PHL}, t_{PLH}	Propagation Delay Time Comparing Inputs to Outputs		5		300	600	ns
			10		125	250	
			15		80	160	
	Cascading Input to Outputs		5		200	400	ns
			10		80	160	
			15		60	120	
t_{THL}, t_{TLH}	Transition Time		5		100	200	ns
			10		50	100	
			15		40	80	

Output Low (sink) Current Characteristics.

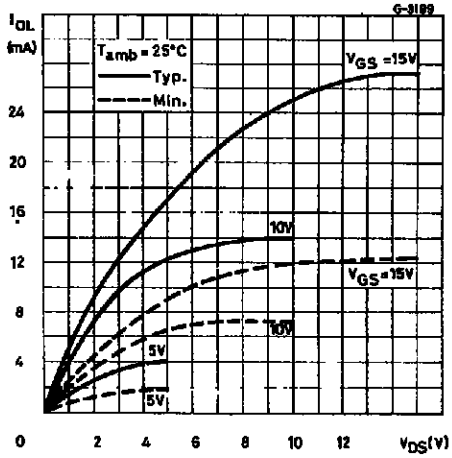

Output High (source) Current Characteristics.

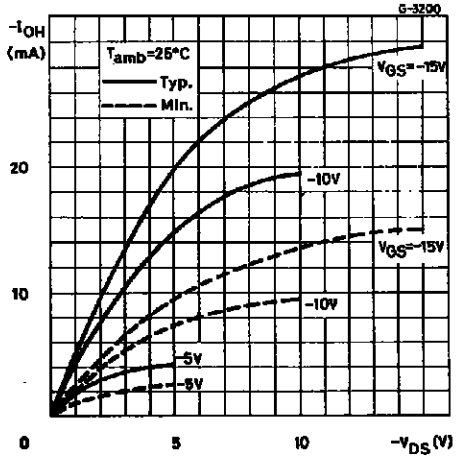

Typical Transition Time vs. Load Capacitance.

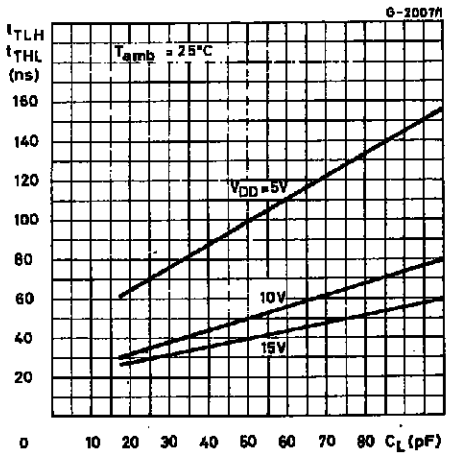

Typical Propagation Delay Time (comparing inputs to outputs) vs. Load Capacitance.

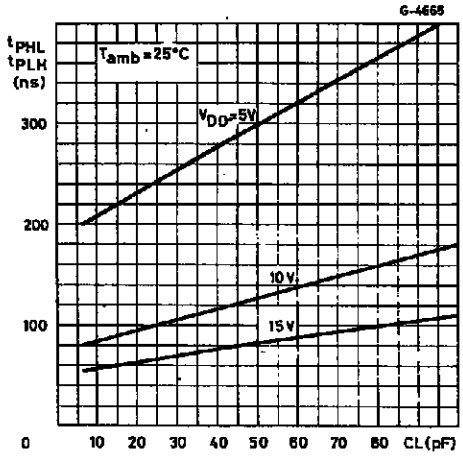

Typical Dynamic Power Dissipation vs. Clock Input Frequency.

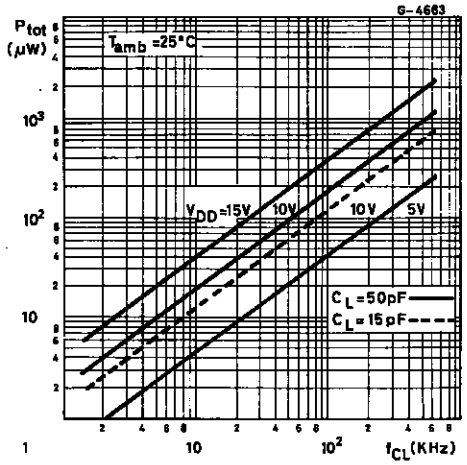

TYPICAL APPLICATION

TYPICAL SPEED CHARACTERISTICS OF A 12-BIT COMPARATOR

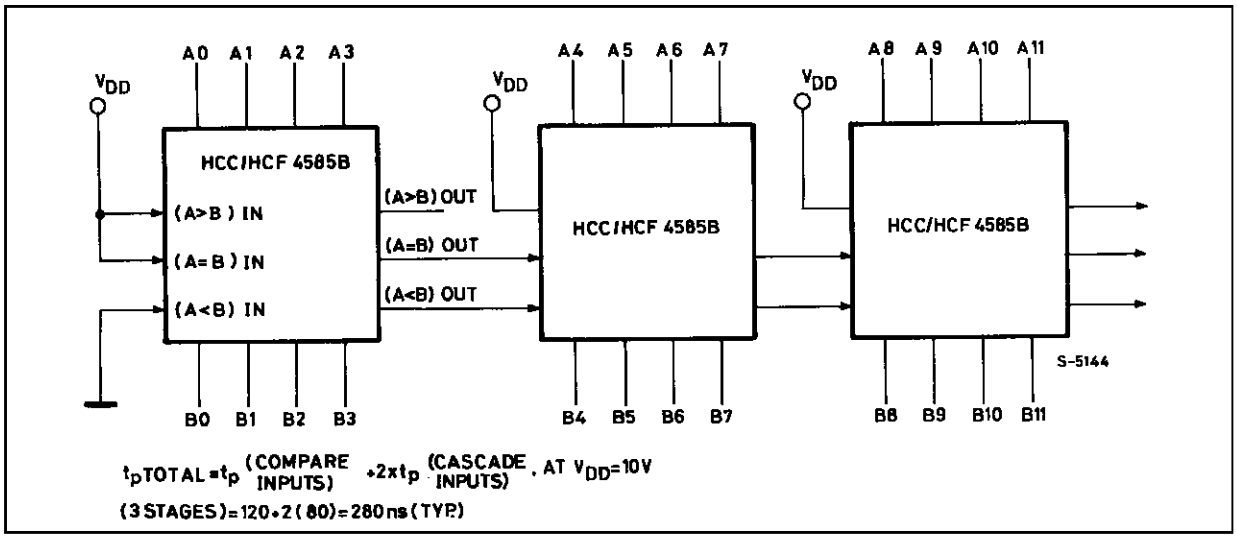

TEST CIRCUITS

Quiescent Device Current.

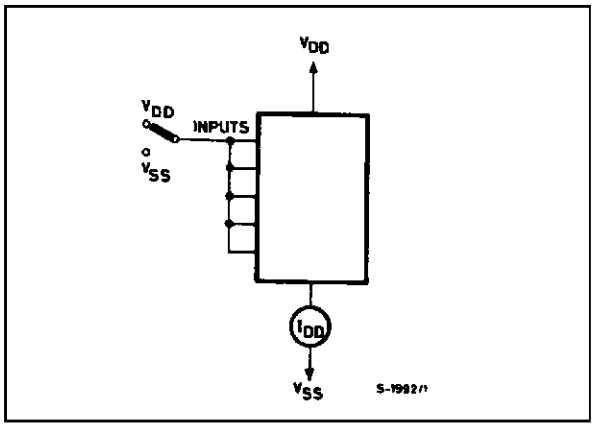

Input Voltage.

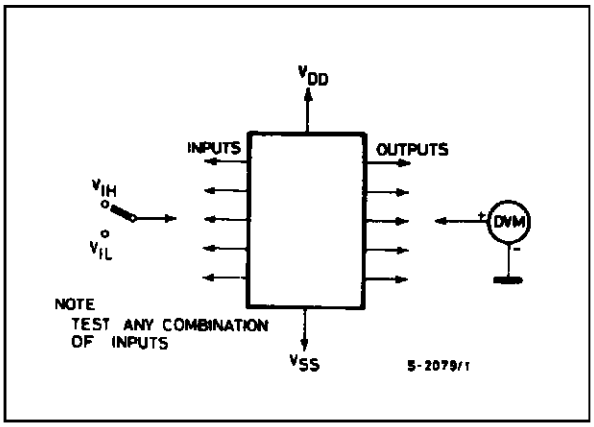

Input Leakage Current.

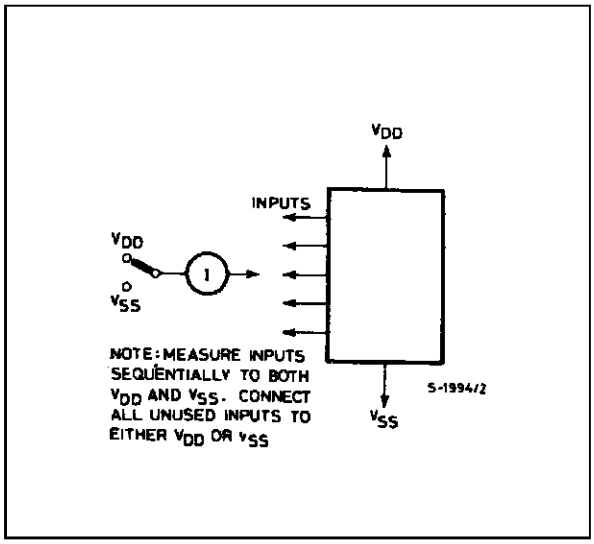

Dynamic Power Dissipation.

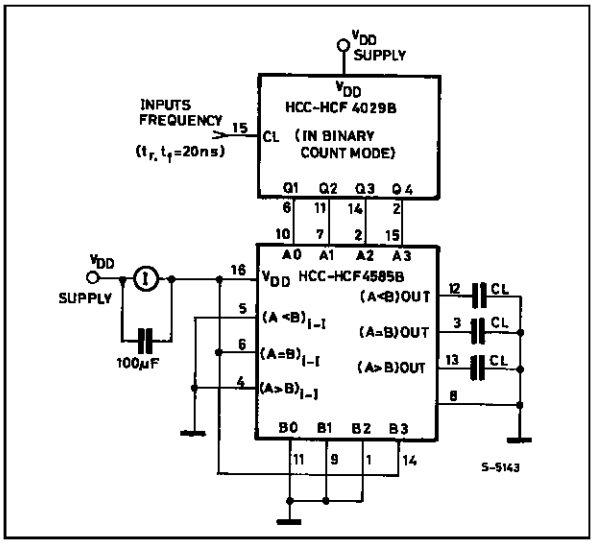

Plastic DIP16 (0.25) MECHANICAL DATA

DIM.	mm			inch		
	MIN.	TYP.	MAX.	MIN.	TYP.	MAX.
a1	0.51			0.020		
B	0.77		1.65	0.030		0.065
b		0.5			0.020	
b1		0.25			0.010	
D			20			0.787
E		8.5			0.335	
e		2.54			0.100	
e3		17.78			0.700	
F			7.1			0.280
I			5.1			0.201
L		3.3			0.130	
Z			1.27			0.050

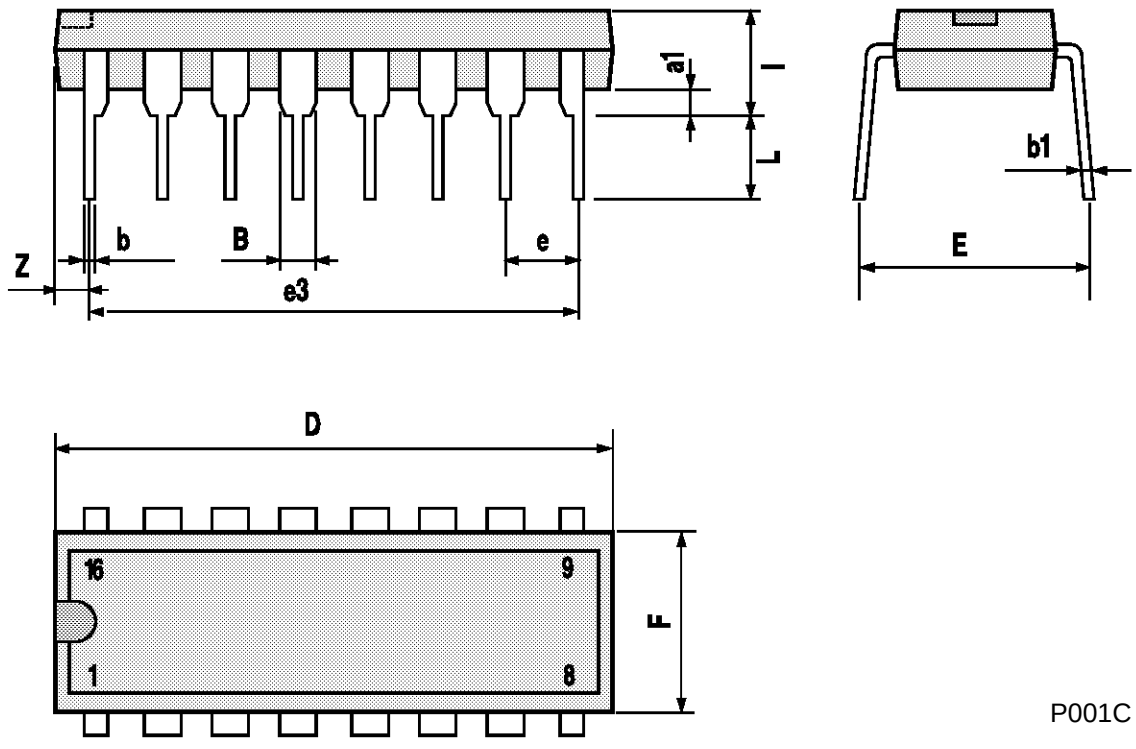

P001C

Ceramic DIP16/1 MECHANICAL DATA

DIM.	mm			inch		
	MIN.	TYP.	MAX.	MIN.	TYP.	MAX.
A			20			0.787
B			7			0.276
D		3.3			0.130	
E	0.38			0.015		
e3		17.78			0.700	
F	2.29		2.79	0.090		0.110
G	0.4		0.55	0.016		0.022
H	1.17		1.52	0.046		0.060
L	0.22		0.31	0.009		0.012
M	0.51		1.27	0.020		0.050
N			10.3			0.406
P	7.8		8.05	0.307		0.317
Q			5.08			0.200

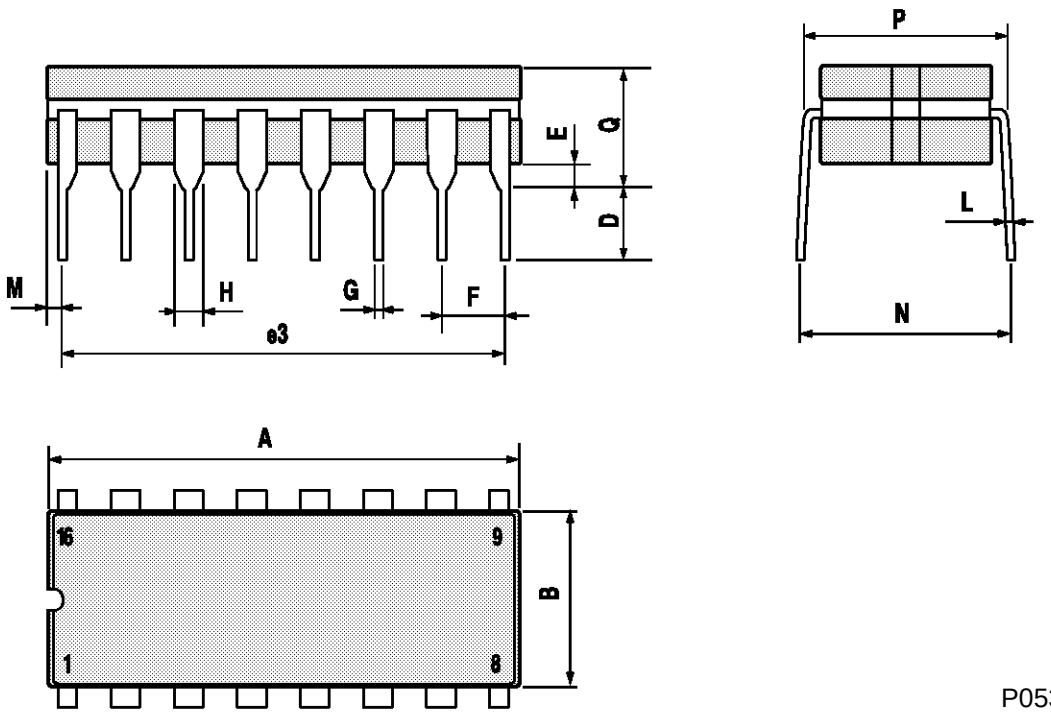

P053D

SO16 (Narrow) MECHANICAL DATA

DIM.	mm			inch		
	MIN.	TYP.	MAX.	MIN.	TYP.	MAX.
A			1.75			0.068
a1	0.1		0.2	0.004		0.007
a2			1.65			0.064
b	0.35		0.46	0.013		0.018
b1	0.19		0.25	0.007		0.010
C		0.5			0.019	
c1	45° (typ.)					
D	9.8		10	0.385		0.393
E	5.8		6.2	0.228		0.244
e		1.27			0.050	
e3		8.89			0.350	
F	3.8		4.0	0.149		0.157
G	4.6		5.3	0.181		0.208
L	0.5		1.27	0.019		0.050
M			0.62			0.024
S	8° (max.)					

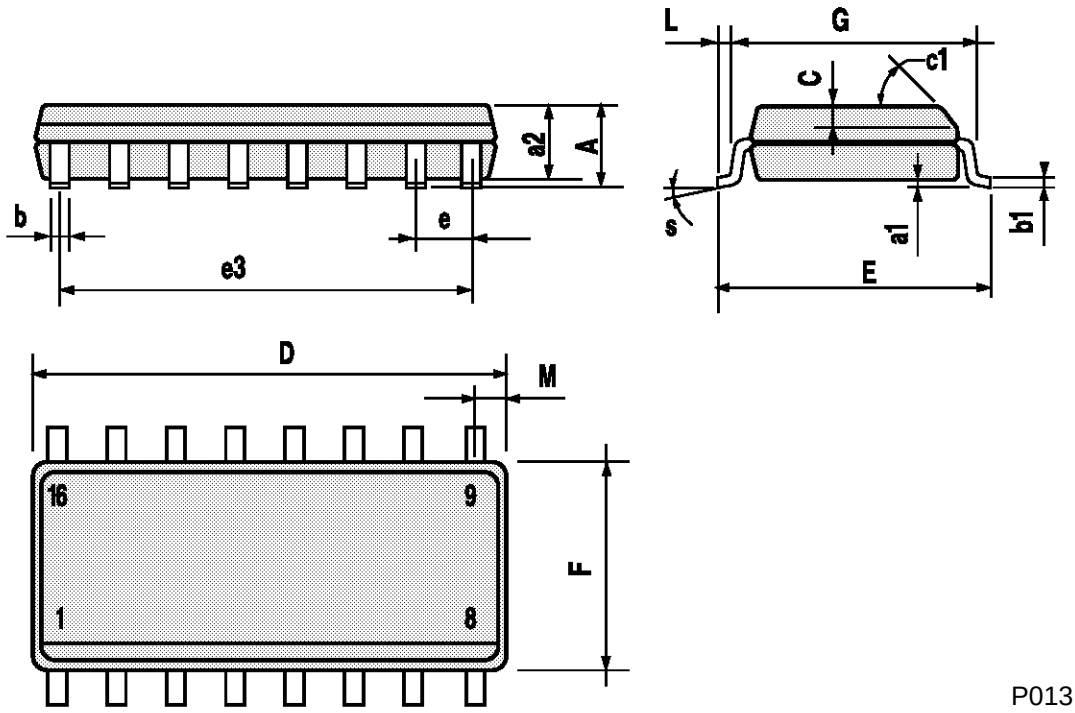

P013H

PLCC20 MECHANICAL DATA

DIM.	mm			inch		
	MIN.	TYP.	MAX.	MIN.	TYP.	MAX.
A	9.78		10.03	0.385		0.395
B	8.89		9.04	0.350		0.356
D	4.2		4.57	0.165		0.180
d1		2.54			0.100	
d2		0.56			0.022	
E	7.37		8.38	0.290		0.330
e		1.27			0.050	
e3		5.08			0.200	
F		0.38			0.015	
G			0.101			0.004
M		1.27			0.050	
M1		1.14			0.045	

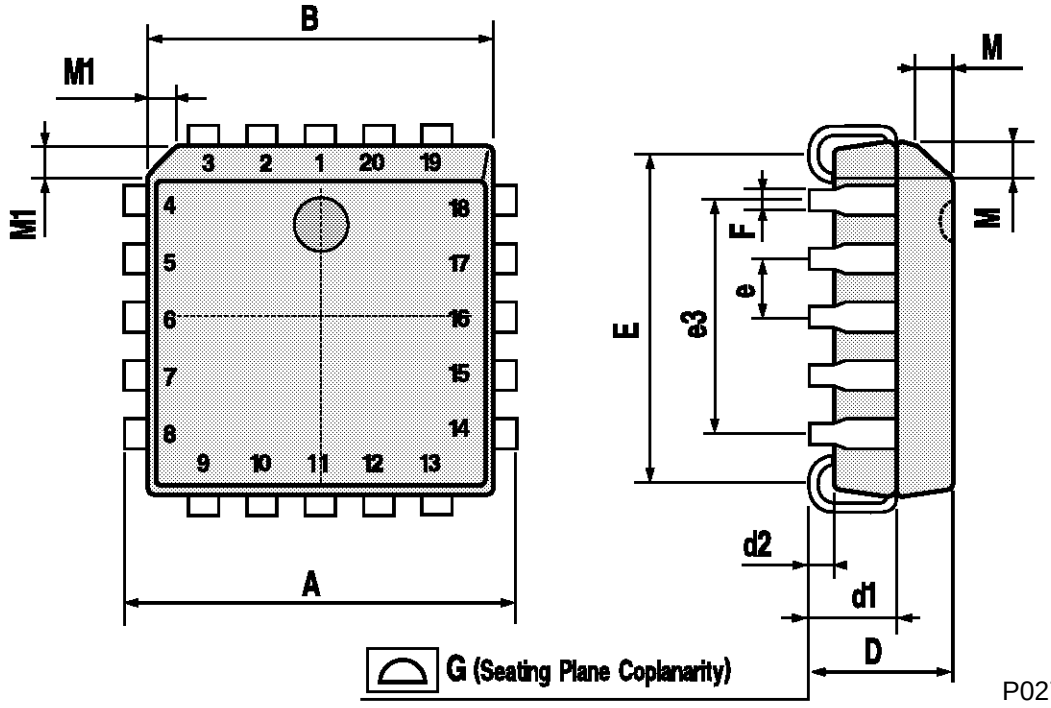

P027A

Information furnished is believed to be accurate and reliable. However, SGS-THOMSON Microelectronics assumes no responsability for the consequences of use of such information nor for any infringement of patents or other rights of third parties which may results from its use. No license is granted by implication or otherwise under any patent or patent rights of SGS-THOMSON Microelectronics. Specifications mentioned in this publication are subject to change without notice. This publication supersedes and replaces all information previously supplied.
SGS-THOMSON Microelectronics products are not authorized for use as critical components in life support devices or systems without express written approval of SGS-THOMSON Microelectonics.

© 1994 SGS-THOMSON Microelectronics - All Rights Reserved

SGS-THOMSON Microelectronics GROUP OF COMPANIES
Australia - Brazil - France - Germany - Hong Kong - Italy - Japan - Korea - Malaysia - Malta - Morocco - The Netherlands - Singapore - Spain - Sweden - Switzerland - Taiwan - Thailand - United Kingdom - U.S.A