# HC4
## High Power Resonant Capacitors



| | |
|---|---|
| FEATURES | High AC Voltage - High current |
| APPLICATIONS | Induction Heating - Tank Circuits |

| KVAR | 350 | 400 | |
|---|---|---|---|
| MAXIMUM CORE TEMPERATURE | +85°C | | |
| SURFACE TEMPERATURE | +45°C<br>(Above 45°C the KVAR rating must be de-rated by 2.25%/°C) | | |
| CONSTRUCTION | Self-healing | | |
| SELF INDUCTANCE | <5 nH | | |
| DIELECTRIC | Polypropylene | | |

## Standard part listing

| Capacitance (µF) | VAC | IC PART number | Maximum RMS current (A) | MAX power kvar | Frequency range (kHz) | ESR (mΩ) 100kHz, +25°C | Dimensions (mm) | | | Terminal Style |
|---|---|---|---|---|---|---|---|---|---|---|
| | | | | | | | B | H | L | |
| 0.15 | 1000 | 154HC4102K2UM8 | 450 | 400 | 425-538 | 2.0 | 30.2 | 55 | 73 | 2UM8 |
| 0.20 | 1000 | 204HC4102K2UM8 | 450 | 400 | 319-404 | 1.8 | 30.2 | 55 | 73 | 2UM8 |
| 0.25 | 1000 | 254HC4102K2UM8 | 450 | 400 | 256-323 | 1.5 | 30.2 | 55 | 73 | 2UM8 |
| 0.30 | 1000 | 304HC4102K2UM8 | 600 | 400 | 213-478 | 1.2 | 30.2 | 55 | 73 | 2UM8 |
| 0.33 | 1000 | 334HC4102K2EM8 | 600 | 400 | 194-433 | 1.0 | 30.2 | 66 | 56 | 2EM8 |
| 0.50 | 700 | 504HC4700K2UM8 | 600 | 400 | 259-285 | 1.0 | 30.2 | 55 | 73 | 2UM8 |
| 0.66 | 700 | 664HC4700K2UM8 | 600 | 400 | 197-220 | 0.8 | 30.2 | 55 | 73 | 2UM8 |
| 0.66 | 1000 | 664HC4102K2EM8 | 600 | 400 | 95-216 | 0.8 | 30.2 | 66 | 56 | 2EM8 |
| 1.00 | 700 | 105HC4700K2UM8 | 750 | 400 | 129-223 | 0.6 | 30.2 | 55 | 73 | 2UM8 |
| 1.20 | 900 | 125HC4900K2EM8 | 850 | 400 | 58-215 | 0.3 | 30.2 | 66 | 56 | 2EM8 |
| 1.30 | 500 | 135HC4500K2UM8 | 750 | 350 | 170-196 | 0.5 | 30.2 | 55 | 73 | 2UM8 |
| 1.32 | 900 | 135HC4900K2EM8 | 850 | 400 | 58-215 | 0.3 | 30.2 | 66 | 56 | 2EM8 |
| 1.50 | 500 | 155HC4500K2UM8 | 800 | 350 | 148-170 | 0.4 | 30.2 | 55 | 73 | 2UM8 |
| 2.00 | 500 | 205HC4500K2UM8 | 800 | 350 | 110-145 | 0.2 | 30.2 | 55 | 73 | 2UM8 |
| 2.60 | 700 | 265HC4700K2EM8 | 950 | 400 | 51-138 | 0.2 | 30.2 | 66 | 56 | 2EM8 |
| 5.00 | 500 | 505HC4500K2EM8 | 1000 | 400 | 50-80 | 0.1 | 30.2 | 66 | 56 | 2EM8 |

ILLINOIS CAPACITOR
*Your Global Source for World-Class Capacitors*
© 2013 Illinois Capacitor, Inc.

**North America**
Tel: 847.675.1760
sales@illcap.com

**Asia**
Tel: 852.2793 0931
sales@illcap.com.hk

# HC4
## High Power Resonant Capacitors



### LEAD STYLE: 2EM8

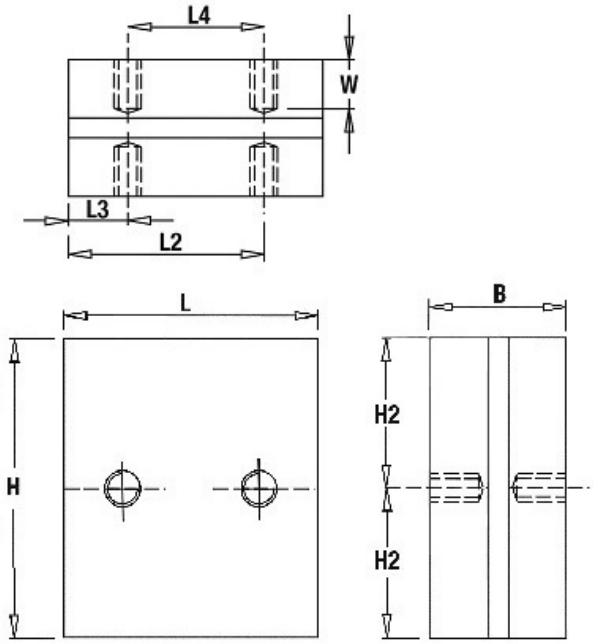


| L | H | B | H2 | L2 | L3 | L4 | W |
|---|---|---|---|---|---|---|---|
| 56±0.5 | 66±0.5 | 30.2±0.1 | 33 | 43 | 13 | 30 | 9 |
| Mounting Holes: M8x1.25 tap fitted with SS helicoil | | | | | | | |
| Tightening torque: 15Nm MAX | | | | | | | |

### LEAD STYLE: 2UM8

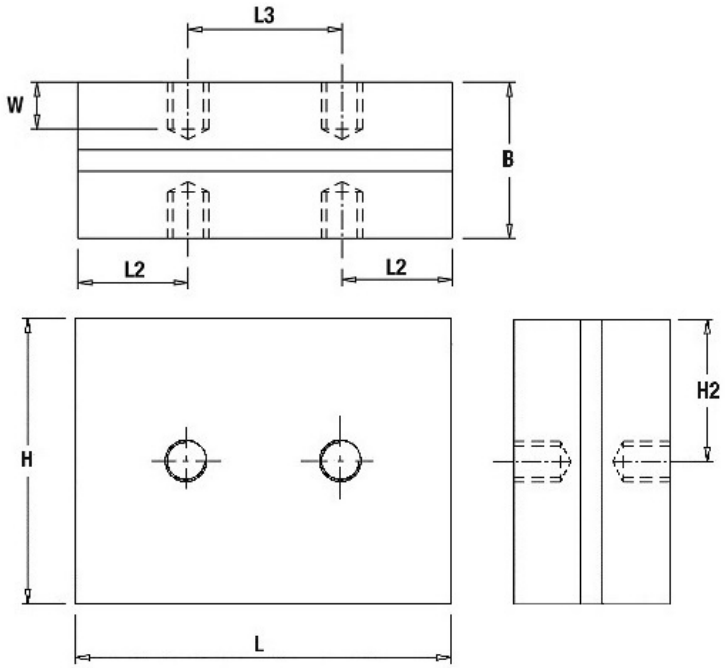


| L | H | B | W | L2 | L3 | H2 |
|---|---|---|---|---|---|---|
| 73±1 | 55±1 | 30.2±0.1 | 9 | 21.5 | 30 | 27.5 |
| Mounting holes: M8 full thread with SS helicoil | | | | | | |
| Tightening torque: 15Nm MAX | | | | | | |


ILLINOIS CAPACITOR
*Your Global Source for World-Class Capacitors*


© 2013 Illinois Capacitor, Inc.


**North America**
Tel: 847.675.1760
sales@illcap.com

**Asia**
Tel: 852.2793 0931
sales@illcap.com.hk

# HC4

## High Power Resonant Capacitors



| Capacitance (µF) | VAC | IC PART number | Maximum RMS current (A) | MAX power kvar | Frequency range (kHz) | ESR (mΩ) 100kHz, +25°C | Dimensions (mm) | | | Terminal Style |
|---|---|---|---|---|---|---|---|---|---|---|
| | | | | | | | B | H | T | |
| 0.33 | 1000 | 334HC4102K4TM6 | 600 | 400 | 194-433 | 1.0 | 30.2 | 60 | 60 | 4TM6 |
| 0.66 | 1000 | 664HC4102K4TM6 | 600 | 400 | 95-216 | 0.8 | 30.2 | 60 | 60 | 4TM6 |
| 1.2 | 900 | 125HC4900K4TM6 | 850 | 400 | 58-215 | 0.3 | 30.2 | 60 | 60 | 4TM6 |
| 1.32 | 900 | 135HC4900K4TM6 | 850 | 400 | 58-215 | 0.3 | 30.2 | 60 | 60 | 4TM6 |
| 2.6 | 700 | 265HC4700K4TM6 | 950 | 400 | 51-138 | 0.2 | 30.2 | 60 | 60 | 4TM6 |
| 5 | 500 | 505HC4500K4TM6 | 1000 | 400 | 50-80 | 0.1 | 30.2 | 60 | 60 | 4TM6 |

**LEAD STYLE: 4TM6**

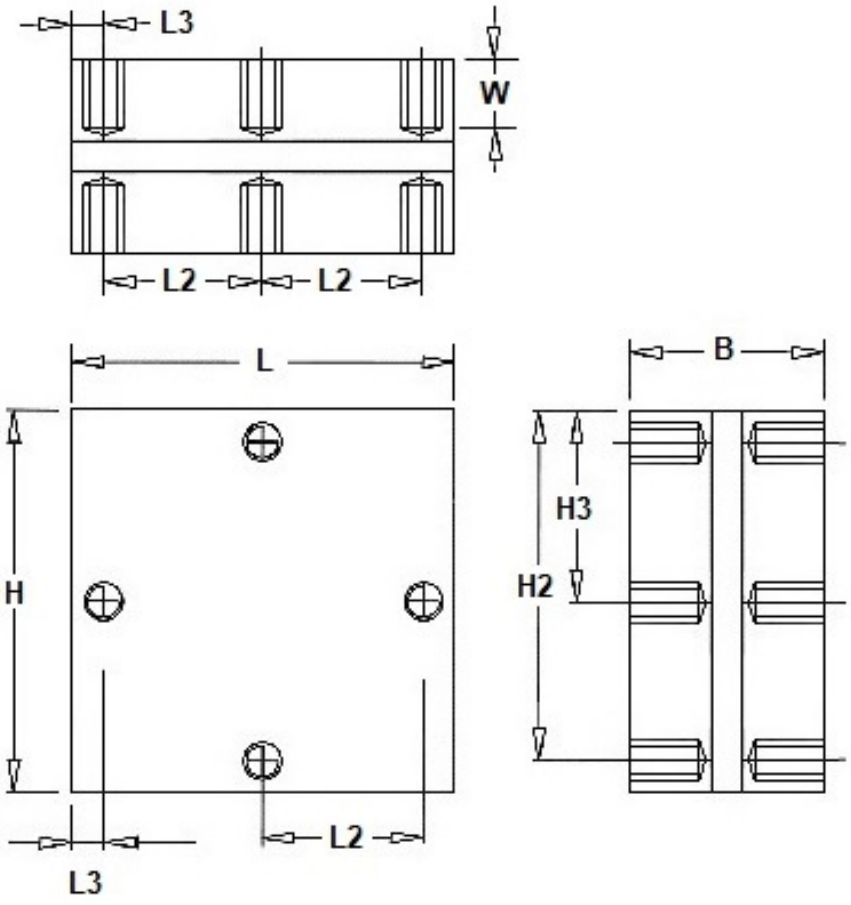


| L | H | B | H2 | H3 | L2 | L3 | W |
|---|---|---|---|---|---|---|---|
| 60±0.5 | 60±0.5 | 30.2±0.1 | 55 | 30 | 25 | 5 | 10±0.5 |
| Mounting Holes: M6x1 tap fitted with SS helicoil | | | | | | | |
| Tightening torque: 15Nm MAX | | | | | | | |


ILLINOIS CAPACITOR

*Your Global Source for World-Class Capacitors*



© 2013 Illinois Capacitor, Inc.



**North America**
Tel: 847.675.1760
sales@illcap.com

**Asia**
Tel: 852.2793 0931
sales@illcap.com.hk

# HC4

## High Power Resonant Capacitors



## Frequency Derating

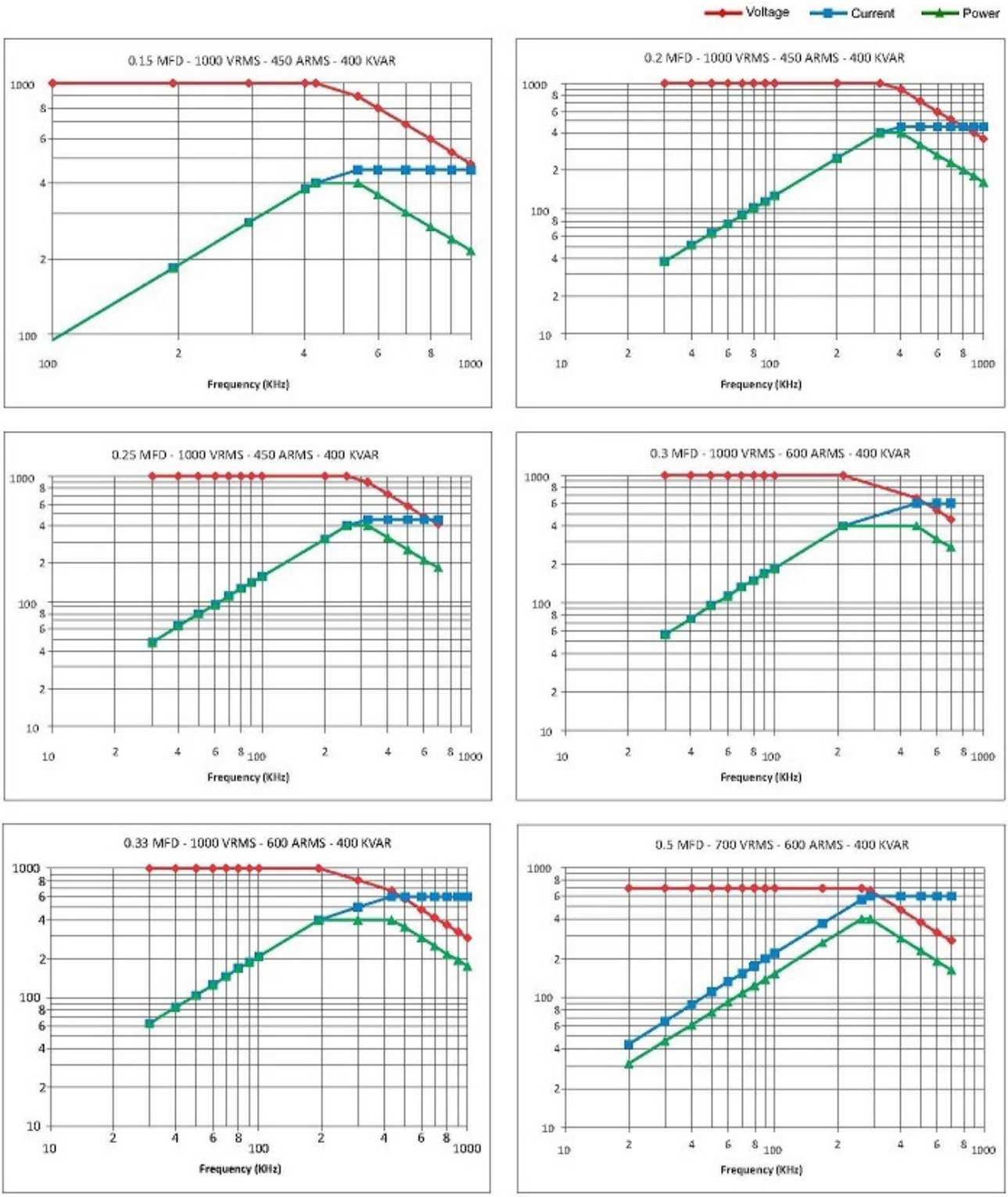



ILLINOIS CAPACITOR

*Your Global Source for World-Class Capacitors*



© 2013 Illinois Capacitor, Inc.



**North America**
Tel: 847.675.1760
sales@illcap.com

**Asia**
Tel: 852.2793 0931
sales@illcap.com.hk

# HC4

## High Power Resonant Capacitors



## Frequency Derating

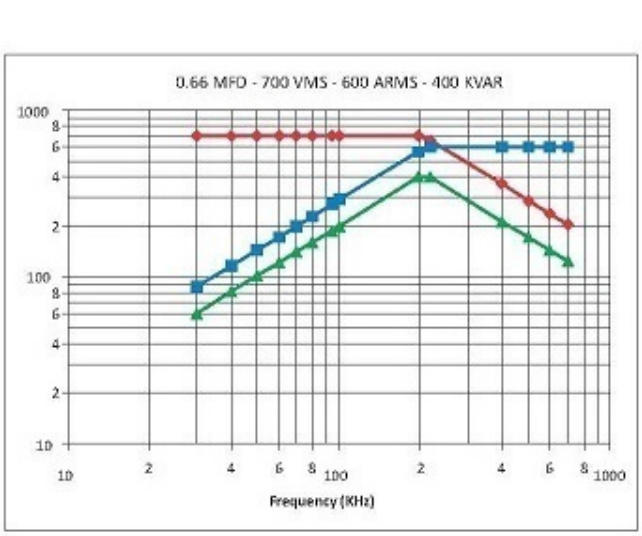


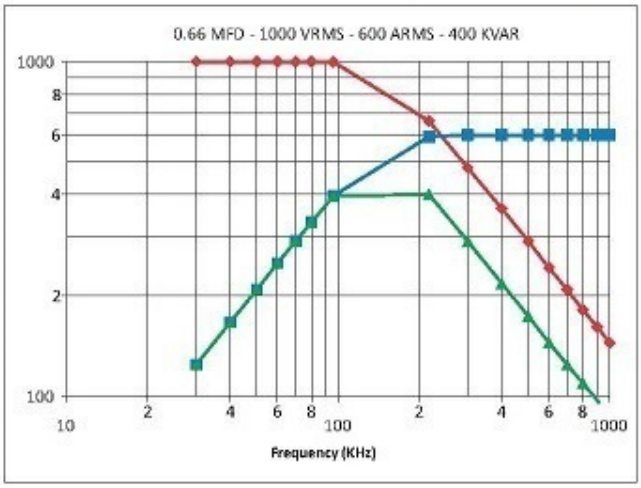


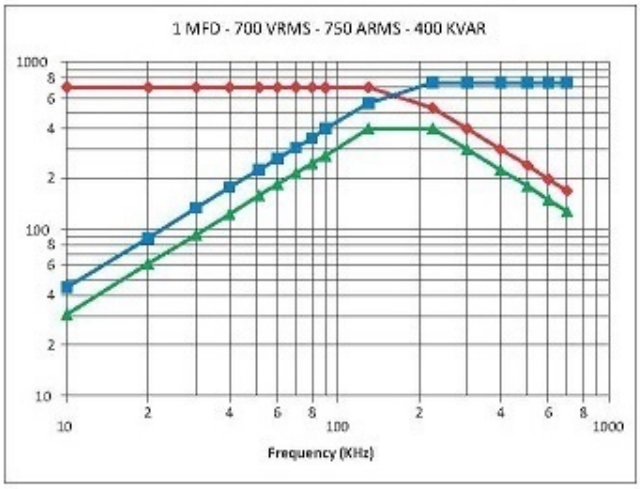


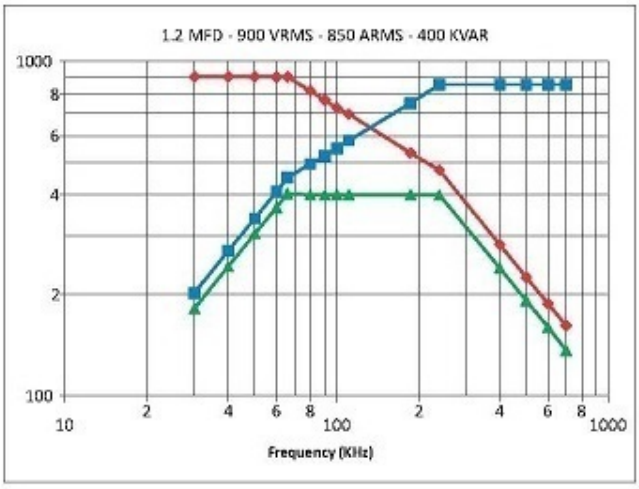


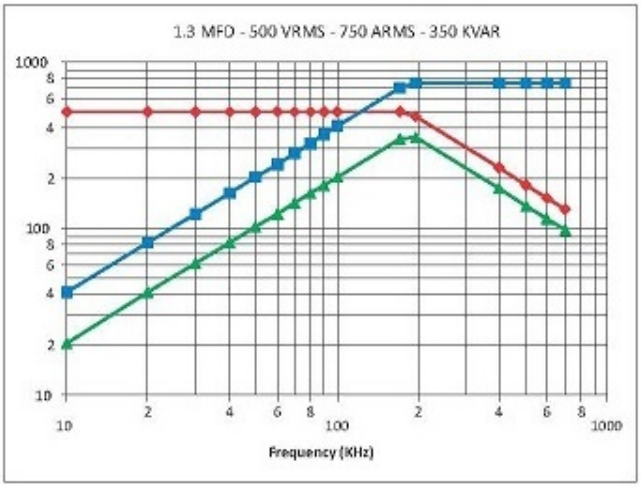


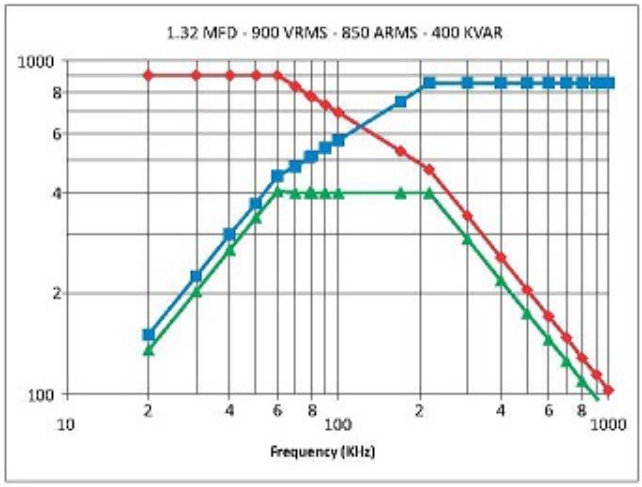



ILLINOIS CAPACITOR

*Your Global Source for World-Class Capacitors*



© 2013 Illinois Capacitor, Inc.



**North America**
Tel: 847.675.1760
sales@illcap.com

**Asia**
Tel: 852.2793 0931
sales@illcap.com.hk

# HC4

## High Power Resonant Capacitors



### Frequency Derating

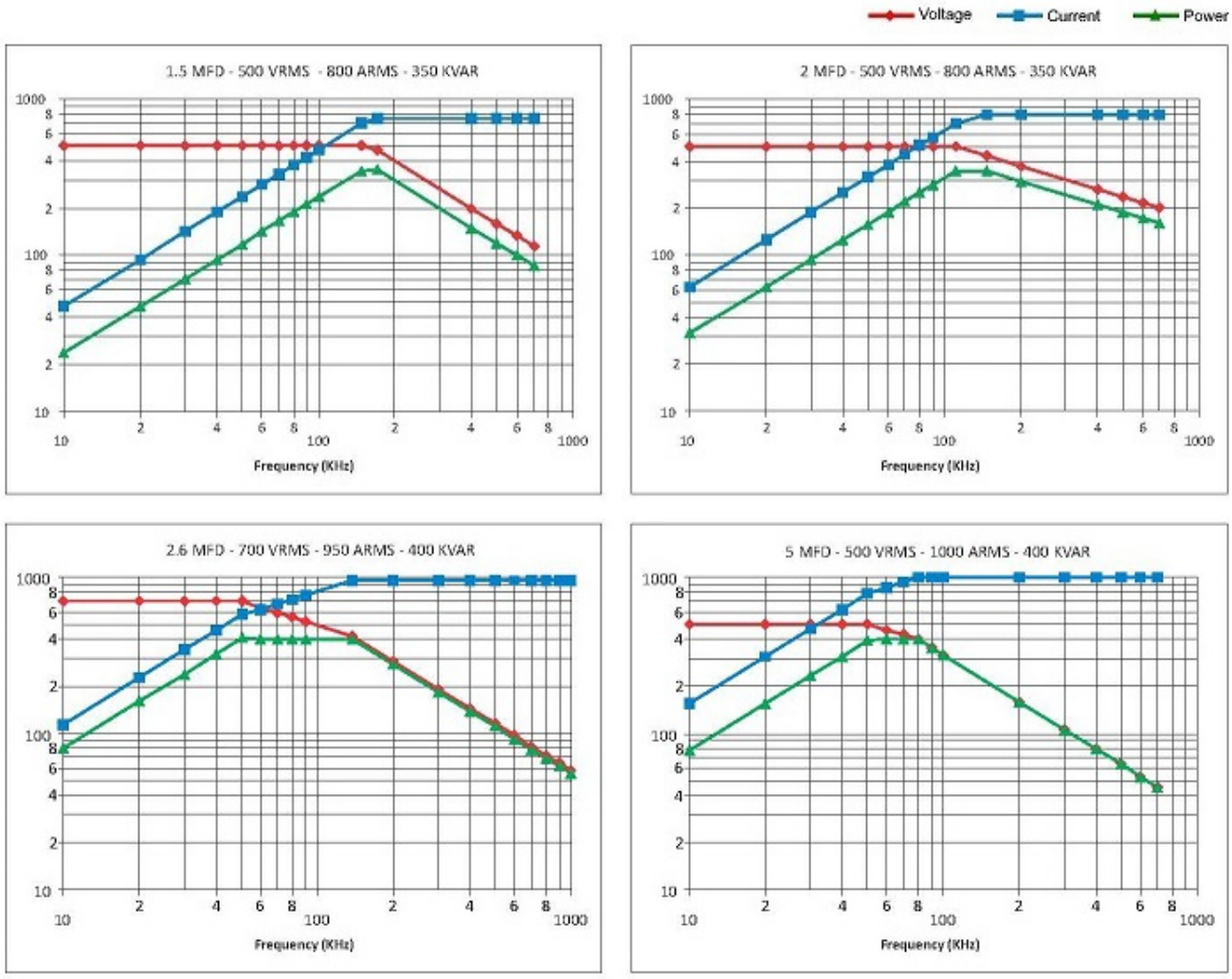



ILLINOIS CAPACITOR

*Your Global Source for World-Class Capacitors*



© 2013 Illinois Capacitor, Inc.



**North America**
Tel: 847.675.1760
sales@illcap.com

**Asia**
Tel: 852.2793 0931
sales@illcap.com.hk