PART NO.	REVISIONS								
	ECN #	REV	DESCRIPTION	DRAWN	DATE	CHECKD	DATE	APPRVD	DATE
HBT3	-	A	RELEASED	Kiran	16/04/09	Suresh	16/04/09	Farnell	30/04/09

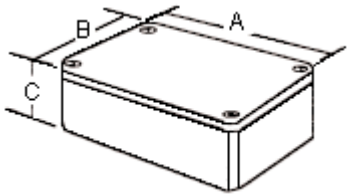

Features:

- These boxes are moulded in grade 103 ABS to give maximum strength but can be easily punched or drilled for individual requirements and to produce a professional looking end product.
- Available in black with a matt finish as standard.
- Lid retained by countersunk self tapping screws.

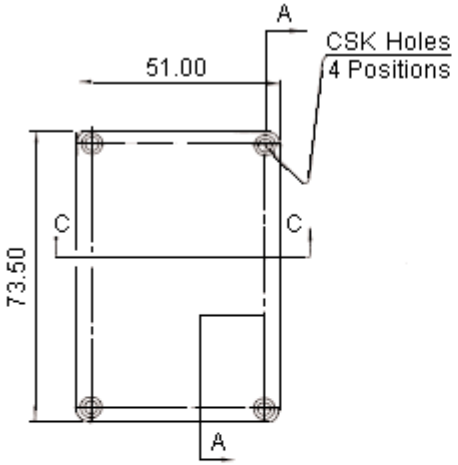

Section on A-A

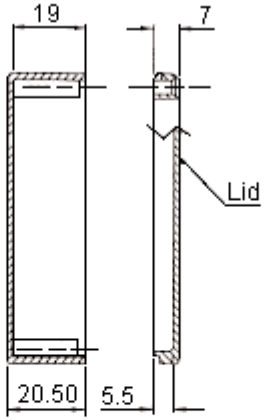

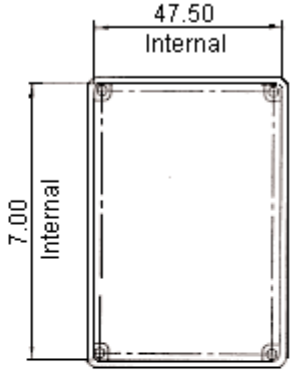

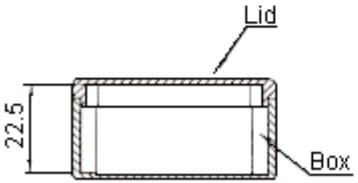

Section on C-C
Box and Lid

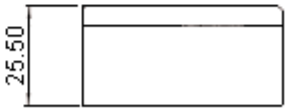

Dimensions: Millimetres

This data sheet and its contents (the "Information") belong to the Premier Farnell Group (the "Group") or are licensed to it. No licence is granted for the use of it other than for information purposes in connection with the products to which it relates. No licence of any intellectual property rights is granted. The Information is subject to change without notice and replaces all data sheets previously supplied. The Information supplied is believed to be accurate but the Group assumes no responsibility for its accuracy or completeness, any error in or omission from it or for any use made of it. Users of this data sheet should check for themselves the Information and the suitability of the products for their purpose and not make any assumptions based on information included or omitted. Liability for loss or damage resulting from any reliance on the Information or use of it (including liability resulting from negligence or where the Group was aware of the possibility of such loss or damage arising) is excluded. This will not operate to limit or restrict the Group's liability for death or personal injury resulting from its negligence. SPC MULTICOMP is the registered trademark of the Group. © Premier Farnell plc 2009.

TOLERANCES:

UNLESS OTHERWISE SPECIFIED, DIMENSIONS ARE FOR REFERENCE PURPOSES ONLY.

DRAWN BY:	DATE:
Kiran	16/04/09
CHECKED BY:	DATE:
Suresh	16/04/09
APPROVED BY:	DATE:
Farnell	30/04/09

DRAWING TITLE: Moulded Box And Lid

SIZE	DWG NO.	ELECTRONIC FILE	REV
A	M10002112	25974_DWG	A

SCALE: NTS | U.O.M.: mm | SHEET: 1 OF 2

PART NO.	REVISIONS									
HBT3	ECN #	REV	DESCRIPTION	DRAWN	DATE	CHECKD	DATE	APPRVD	DATE
	-	A	RELEASED	Kiran	16/04/09	Suresh	16/04/09	Farnell	30/04/09

Specifications

Description	Overall Dimensions			Nominal Wall Thickness	Part Number
	A	B	C		
Box, ABS, Black	73.5	5.1	25.5	1.75	HBT3

Dimensions: Millimetres

http://www.farnell.com

http://www.newark.com

http://www.cpc.co.uk

This data sheet and its contents (the "Information") belong to the Premier Farnell Group (the "Group") or are licensed to it. No licence is granted for the use of it other than for information purposes in connection with the products to which it relates. No licence of any intellectual property rights is granted. The Information is subject to change without notice and replaces all data sheets previously supplied. The Information supplied is believed to be accurate but the Group assumes no responsibility for its accuracy or completeness, any error in or omission from it or for any use made of it. Users of this data sheet should check for themselves the Information and the suitability of the products for their purpose and not make any assumptions based on information included or omitted. Liability for loss or damage resulting from any reliance on the Information or use of it (including liability resulting from negligence or where the Group was aware of the possibility of such loss or damage arising) is excluded. This will not operate to limit or restrict the Group's liability for death or personal injury resulting from its negligence. SPC MULTICOMP is the registered trademark of the Group. © Premier Farnell plc 2009.

TOLERANCES:

UNLESS OTHERWISE SPECIFIED, DIMENSIONS ARE FOR REFERENCE PURPOSES ONLY.

DRAWN BY:	DATE:
Kiran	16/04/09
CHECKED BY:	DATE:
Suresh	16/04/09
APPROVED BY:	DATE:
Farnell	30/04/09

DRAWING TITLE: Moulded Box And Lid

SIZE	DWG NO.	ELECTRONIC FILE	REV
A	M10002112	25974_DWG	A

SCALE: NTS | U.O.M.: mm | SHEET: 2 OF 2