MICRONAS

Hardware
Documentation

Data Sheet

HAL® 411

Linear Hall-Effect Sensor IC

Edition Dec. 8, 2008
DSH000019_002EN

Copyright, Warranty, and Limitation of Liability

The information and data contained in this document are believed to be accurate and reliable. The software and proprietary information contained therein may be protected by copyright, patent, trademark and/or other intellectual property rights of Micronas. All rights not expressly granted remain reserved by Micronas.

Micronas assumes no liability for errors and gives no warranty representation or guarantee regarding the suitability of its products for any particular purpose due to these specifications.

By this publication, Micronas does not assume responsibility for patent infringements or other rights of third parties which may result from its use. Commercial conditions, product availability and delivery are exclusively subject to the respective order confirmation.

Any information and data which may be provided in the document can and do vary in different applications, and actual performance may vary over time.

All operating parameters must be validated for each customer application by customers technical experts. Any new issue of this document invalidates previous issues. Micronas reserves the right to review this document and to make changes to the documents content at any time without obligation to notify any person or entity of such revision or changes. For further advice please contact us directly.

Do not use our products in life-supporting systems, aviation and aerospace applications! Unless explicitly agreed to otherwise in writing between the parties, Micronas products are not designed, intended or authorized for use as components in systems intended for surgical implants into the body, or other applications intended to support or sustain life, or for any other application in which the failure of the product could create a situation where personal injury or death could occur.

No part of this publication may be reproduced, photocopied, stored on a retrieval system or transmitted without the express written consent of Micronas.

Micronas Trademarks

– HAL

Micronas Patents

Choppered Offset Compensation protected by Micronas patents no. US5260614A, US5406202A, EP052523B1, and EP0548391B1.

Third-Party Trademarks

All other brand and product names or company names may be trademarks of their respective companies.

Contents

Page	Section	Title
4	**1.**	**Introduction**
4	1.1.	Features
4	1.2.	Marking Code
4	1.3.	Operating Junction Temperature Range
4	1.4.	Hall Sensor Package Codes
4	1.5.	Solderability and Welding
5	**2.**	**Functional Description**
5	2.1.	Offset Compensation
6	**3.**	**Specifications**
6	3.1.	Outline Dimensions
7	3.2.	Dimensions of Sensitive Area
7	3.3.	Positions of Sensitive Areas
7	3.4.	Absolute Maximum Ratings
7	3.4.1.	Storage and Shelf Life
8	3.5.	Recommended Operating Conditions
8	3.6.	Characteristics
15	**4.**	**Application Notes**
15	4.1.	Ambient Temperature
15	4.2.	EMC and ESD
15	4.3.	Application Circuit
18	**5.**	**Data Sheet History**

Linear Hall Effect Sensor IC
in CMOS technology

Release Notes: Revision bars indicate significant changes to the previous edition.

1. Introduction

The HAL411 is a Linear Hall Effect Sensor produced in CMOS technology. The sensor includes a temperature-compensated Hall plate with choppered offset compensation, two linear output stages, and protection devices (see Fig. 2–1).

The output voltage is proportional to the magnetic flux density through the hall plate. The choppered offset compensation leads to stable magnetic characteristics over supply voltage and temperature.

The HAL411 can be used for magnetic field measurements, current measurements, and detection of any mechanical movement. Very accurate angle measurements or distance measurements can also be done. The sensor is very robust and can be used in electrically and mechanically hostile environments.

The sensor is designed for industrial and automotive applications and operates in the ambient temperature range from –40 °C up to 100 °C and is available in the SMD-package SOT-89B.

1.1. Features:

– switching offset compensation at 147 kHz
– low magnetic offset
– extremely sensitive
– operates from 4.9 to 5.1 V supply voltage
– overvoltage protection
– reverse voltage protection of V_{DD}-pin
– differential output
– accurate absolute measurements of DC and low frequency magnetic fields
– on-chip temperature compensation
– low 1/f-noise

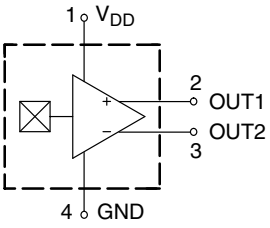

Fig. 1–1: Pin configuration

1.2. Marking Code

All Hall sensors have a marking on the package surface (branded side). This marking includes the name of the sensor and the temperature range.

1.3. Operating Junction Temperature Range

The Hall sensors from Micronas are specified to the chip temperature (junction temperature T_J).

The HAL411 is available in the temperature range “E” only.

E: T_J = –40 °C to +100 °C

The relationship between ambient temperature (T_A) and junction temperature (T_J) is explained in section 4.1. on page 15.

1.4. Hall Sensor Package Codes

HALXXXPA-T

Temperature Range: E
Package: SF for SOT-89B
Type: 411

Example: **HAL411SF-E**

→ Type: 411
→ Package: SOT-89B
→ Temperature Range: T_J = –40 °C to +100 °C

Hall sensors are available in a wide variety of packaging versions and quantities. For more detailed information, please refer to the brochure: “Ordering Codes for Hall Sensors”.

1.5. Solderability and Welding

Soldering

During soldering reflow processing and manual reworking, a component body temperature of 260 °C should not be exceeded.

Welding

Device terminals should be compatible with laser and resistance welding. Please note that the success of the welding process is subject to different welding parameters which will vary according to the welding technique used. A very close control of the welding parameters is absolutely necessary in order to reach satisfying results. Micronas, therefore, does not give any implied or express warranty as to the ability to weld the component.

2. Functional Description

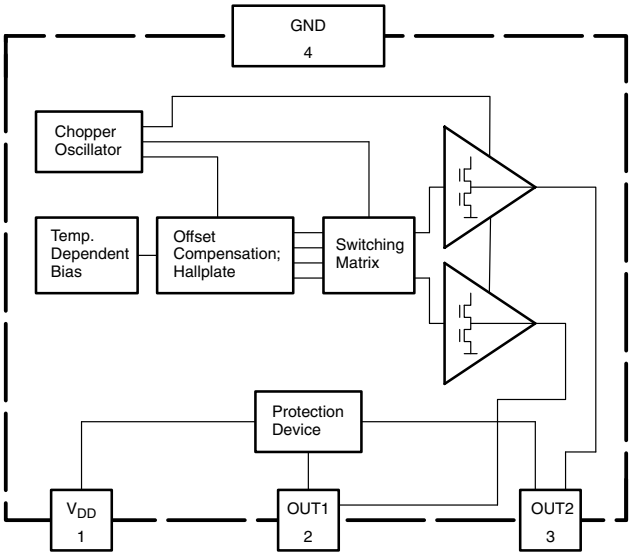

Fig. 2–1: Block diagram of the HAL411 (package outline in top view)

The differential output voltage consists of two components due to the switching offset compensation technique. The average of the differential output voltage represents the magnetic flux density. This component is overlaid by a differential AC signal at a typical frequency of 147 kHz. The AC signal represents the internal offset voltages of amplifiers and hall plates that are influenced by mechanical stress and temperature cycling.

External filtering or integrating measurement can be done to eliminate the AC component of the signal. As a result, the influence of mechanical stress and temperature cycling is suppressed. No adjustment of magnetic offset is needed.

The sensitivity is stabilized over a wide range of temperature and supply voltage due to internal voltage regulation and circuits for temperature compensation.

2.1. Offset Compensation (see Fig. 2–2)

The Hall Offset Voltage is the residual voltage measured in absence of a magnetic field (zero-field residual voltage). This voltage is caused by mechanical stress and can be modeled by a displacement of the connections for voltage measurement and/or current supply.

Compensation of this kind of offset is done by cyclically commuting the connections for current flow and voltage measurement.

– First cycle:
The hall supply current flows between points 4 and 2. In the absence of a magnetic field, V_{13} is the Hall Offset Voltage ($+V_{Offs}$). In case of a magnetic field, V_{13} is the sum of the Hall voltage (V_H) and V_{Offs}.
$V_{13} = V_H + V_{Offs}$

– Second cycle:
The hall supply current flows between points 1 and 3. In the absence of a magnetic field, V_{24} is the Hall Offset Voltage with negative polarity ($-V_{Offs}$). In case of a magnetic field, V_{24} is the difference of the Hall voltage (V_H) and V_{Offs}.
$V_{24} = V_H - V_{Offs}$

In the first cycle, the output shows the sum of the Hall voltage and the offset; in the second, the difference of both. The difference of the mean values of V_{OUT1} and V_{OUT2} (V_{OUTDIF}) is equivalent to V_{Hall}.

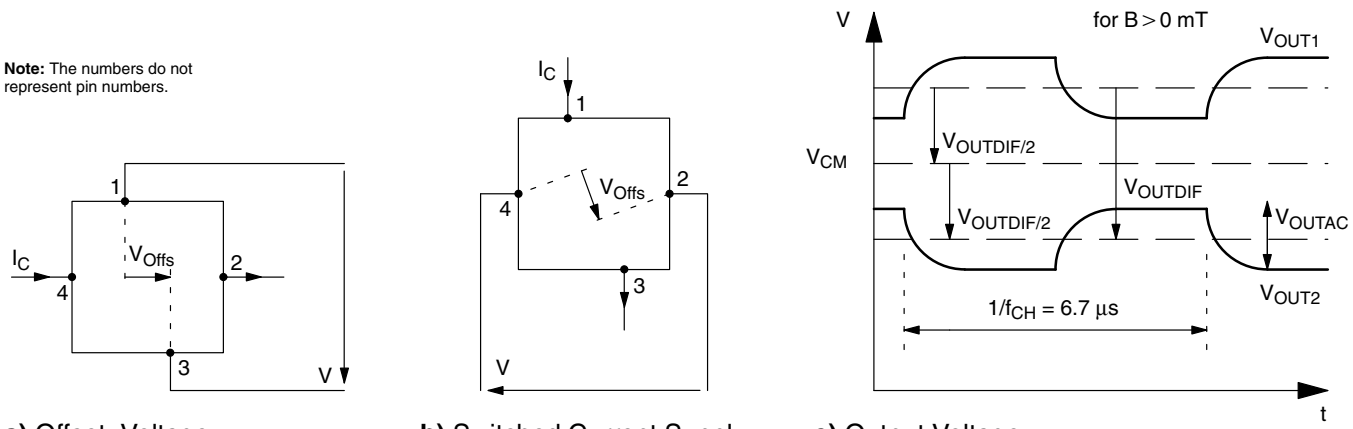

a) Offset Voltage **b)** Switched Current Supply **c)** Output Voltage

Fig. 2–2: Hall Offset Compensation

3. Specifications

3.1. Outline Dimensions

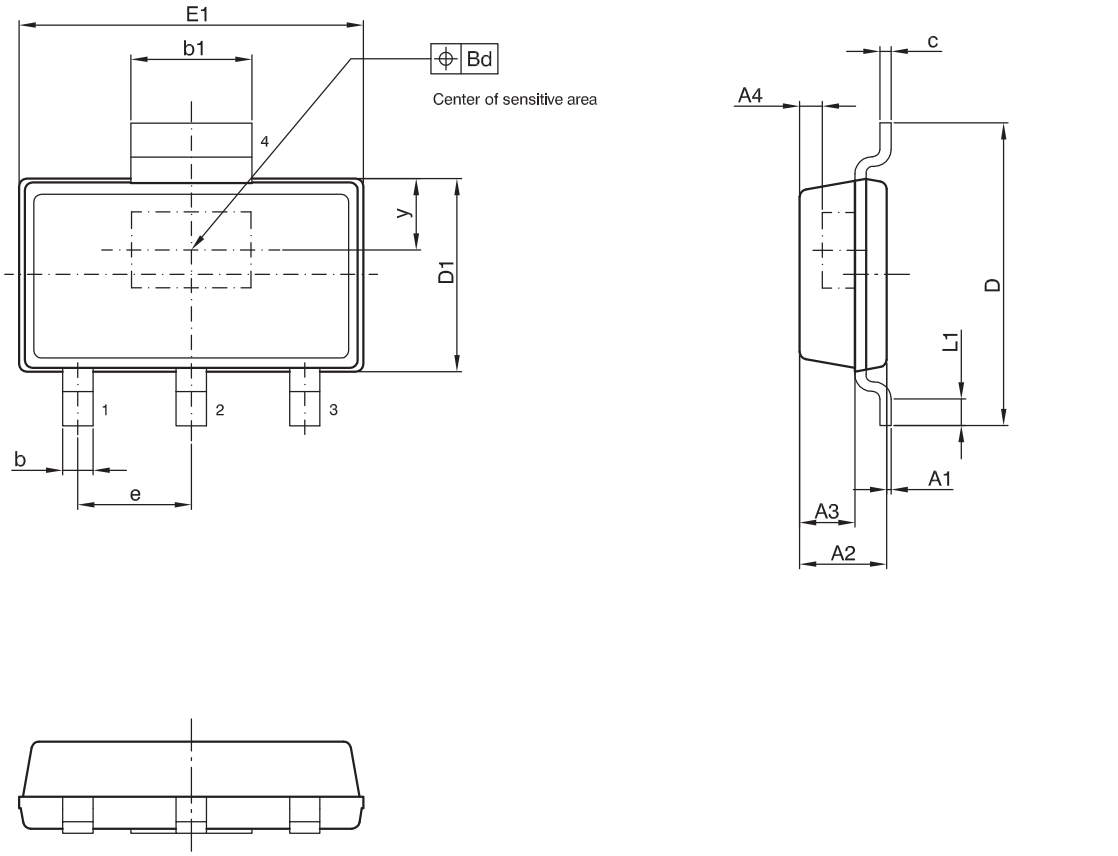

physical dimensions do not include moldflash.

A4, y= these dimensions are different for each sensor type and are specified in the data sheet.

0 2.5 5 mm
scale

UNIT	A1	A2	A3	b	b1	Bd	c	D	D1	e	E1	L1
mm	0.10 0.02	1.20 1.10	0.73	0.4	1.7	0.2	0.15	4.0	2.6 2.5	1.5	4.6 4.5	0.25 min.

JEDEC STANDARD		ANSI	ISSUE DATE YY-MM-DD	DRAWING-NO.	ZG-NO.
ISSUE	ITEM NO.				
-	-		07-07-02	06610.0001.4	ZG001010_Ver.03

Fig. 3–1:
SOT89B-1: Plastic Small Outline Transistor package, 4 leads
Ordering code: SF
Weight approximately 0.034 g

3.2. Dimensions of Sensitive Area

0.37 mm x 0.17 mm

3.3. Positions of Sensitive Areas

	SOT-89B
y	0.95 mm nominal

3.4. Absolute Maximum Ratings

Stresses beyond those listed in the “Absolute Maximum Ratings” may cause permanent damage to the device. This is a stress rating only. Functional operation of the device at these conditions is not implied. Exposure to absolute maximum rating conditions for extended periods will affect device reliability.

This device contains circuitry to protect the inputs and outputs against damage due to high static voltages or electric fields; however, it is advised that normal precautions be taken to avoid application of any voltage higher than absolute maximum-rated voltages to this circuit.

All voltages listed are referenced to ground (GND).

Symbol	Parameter	Pin No.	Min.	Max.	Unit
V_{DD}	Supply Voltage	1	–12	12	V
V_O	Output Voltage	2, 3	–0.3	12	V
I_O	Continuous Output Current	2, 3	–5	5	mA
T_J	Junction Temperature Range		–40	170	°C
T_A	Ambient Temperature at V_{DD} = 5 V at V_{DD} = 12 V		 – –	 150 125	 °C °C

3.4.1. Storage and Shelf Life

The permissible storage time (shelf life) of the sensors is unlimited, provided the sensors are stored at a maximum of 30 °C and a maximum of 85% relative humidity. At these conditions, no Dry Pack is required.

Solderability is guaranteed for one year from the date code on the package.

3.5. Recommended Operating Conditions

Functional operation of the device beyond those indicated in the “Recommended Operating Conditions/Characteristics” is not implied and may result in unpredictable behavior, reduce reliability and lifetime of the device.

All voltage listed are referenced to ground (GND).

Symbol	Parameter	Pin No.	Min.	Max.	Unit	Remarks
I_O	Continuous Output Current	2, 3	–2.25	2.25	mA	T_J = 25 °C
I_O	Continuous Output Current	2, 3	–1	1	mA	T_J = 100 °C
C_L	Load Capacitance	2, 3	–	1	nF	
V_{DD}	Supply Voltage	1	4.9	5.1	V	–40 °C ≤ T_J ≤ 100 °C
B	Magnetic Field Range		–50	50	mT	

3.6. Characteristics at T_J = –40 °C to +100 °C, V_{DD} = 4.9 V to 5.1 V,
at Recommended Operation Conditions if not otherwise specified in the column “Conditions”.
Typical characteristics for T_J = 25 °C, V_{DD} = 5 V and –50 mT < B < 50 mT

Symbol	Parameter	Pin No.	Min.	Typ.	Max.	Unit	Conditions
I_{DD}	Supply Current	1	11	14.5	17.1	mA	T_J = 25 °C, $I_{OUT1,2}$ = 0 mA
I_{DD}	Supply Current over Temperature Range	1	9	14.5	18.5	mA	$I_{OUT1,2}$ = 0 mA
V_{CM}	Common Mode Output Voltage $V_{CM} = (V_{OUT1} + V_{OUT2}) / 2$	2, 3	2.1	2.2	2.3	V	$I_{OUT1,2}$ = 0 mA,
CMRR	Common Mode Rejection Ratio	2, 3	–2.5	0	2.5	mV/V	$I_{OUT1,2}$ = 0 mA, CMRR is limited by the influence of power dissipation.
S_B	Differential Magnetic Sensitivity over Temperature Range	2–3	33	42.5	50	mV/mT	–50 mT < B < 50 mT
B_{offset}	Magnetic Offset over Temperature	2–3	–1.5	–0.2	1.5	mT	B = 0 mT, $I_{OUT1,2}$ = 0 mA
$\Delta B_{OFFSET}/\Delta T$	Magnetic Offset Change		–25	0	25	µT/K	B = 0 mT, $I_{OUT1,2}$ = 0 mA
BW	Bandwidth (–3 dB)	2–3	–	10	–	kHz	without external Filter[1)]
NL_{dif}	Non-Linearity of Differential Output	2–3	–	0.5	2	%	–50 mT < B < 50 mT
NL_{single}	Non-Linearity of Single Ended Output	2, 3	–	2	–	%	
f_{CH}	Chopper Frequency over Temp.	2, 3	–	147	–	kHz	
$V_{OUTACpp}$	Peak-to-Peak AC Output Voltage	2, 3	–	0.6	1.3	V	
n_{meff}	Magnetic RMS Differential Broadband Noise	2–3	–	10	–	µT	BW = 10 Hz to 10 kHz
$f_{Cflicker}$	Corner Frequency of 1/f Noise	2–3	–	10	–	Hz	B = 0 mT

Symbol	Parameter	Pin No.	Min.	Typ.	Max.	Unit	Conditions
$f_{Cflicker}$	Corner Frequency of 1/f Noise	2–3	–	100	–	Hz	B = 50 mT
R_{OUT}	Output Impedance	2, 3	–	30	50	Ω	T_A = 25 °C, $I_{OUT1,2} \leq$ 2.5 mA
R_{OUT}	Output Impedance over Temperature	2, 3	–	30	150	Ω	$I_{OUT1,2} \leq$ 2.5 mA
R_{thJSB} case	Thermal Resistance Junction to Substrate Backside		–	150	200	K/W	Fiberglass Substrate 30 mm x 10 mm x 1.5 mm pad size see Fig. 3–2
[1] with external 2 pole filter (f_{3db} = 5 kHz), V_{OUTAC} is reduced to less than 1 mV by limiting the bandwidth							

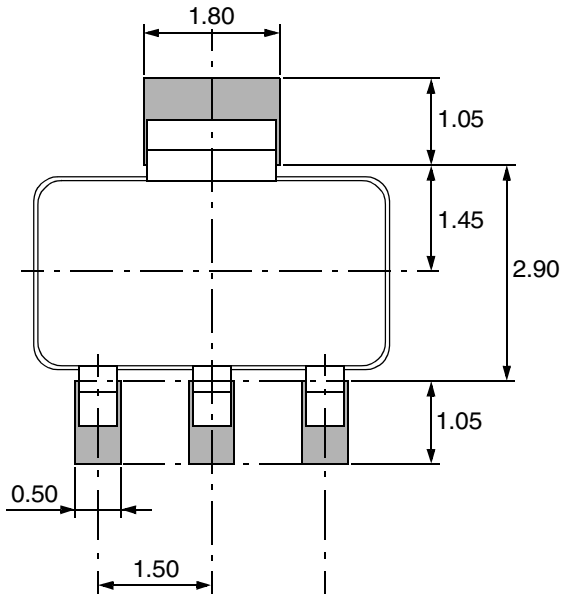

Fig. 3–2: Recommended footprint SOT89B, Dimensions in mm

Note: All dimensions are for reference only. The pad size may vary depending on the requirements of the soldering process.

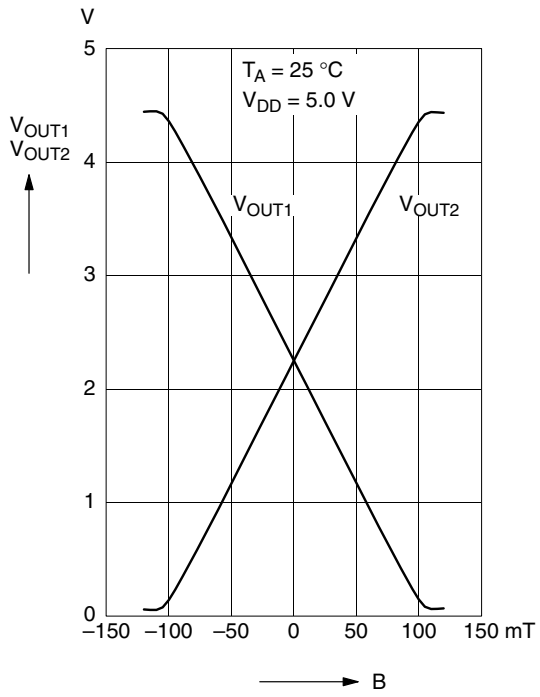

Fig. 3–3: Typical output voltages versus magnetic flux density

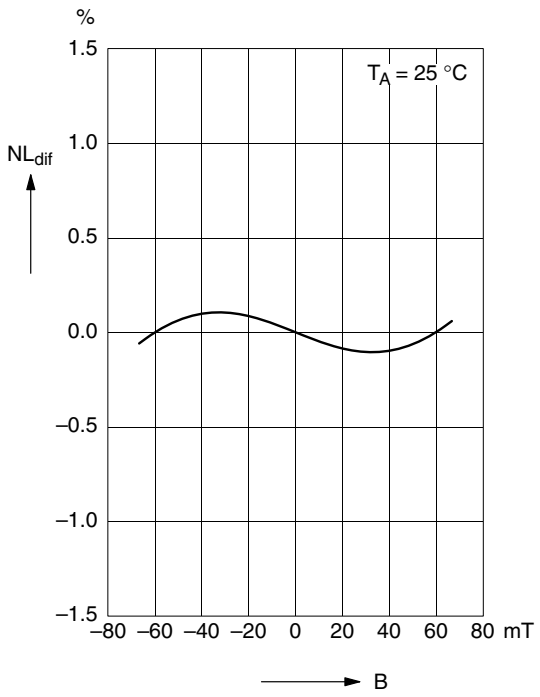

Fig. 3–5: Typical non-linearity of differential output versus magnetic flux density

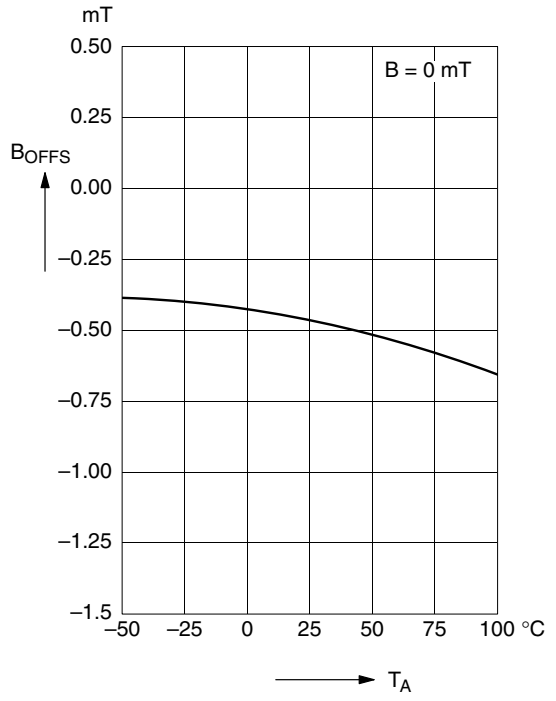

Fig. 3–4: Typical magnetic offset of differential output versus ambient temperature

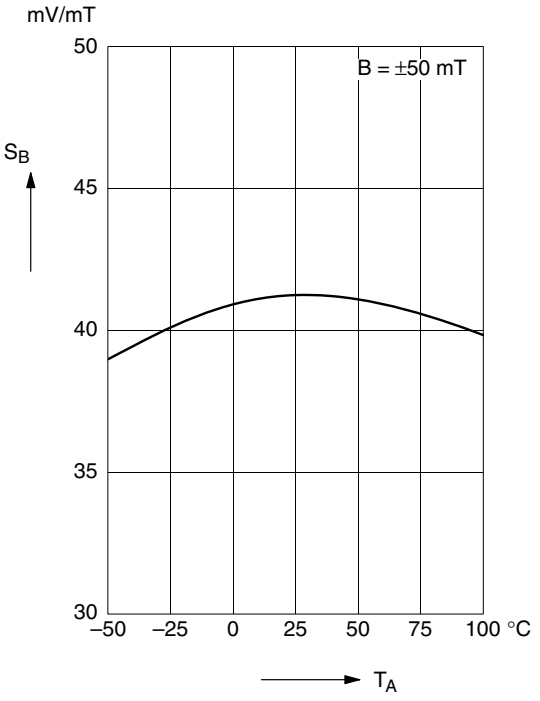

Fig. 3–6: Typical differential magnetic sensitivity versus ambient temperature

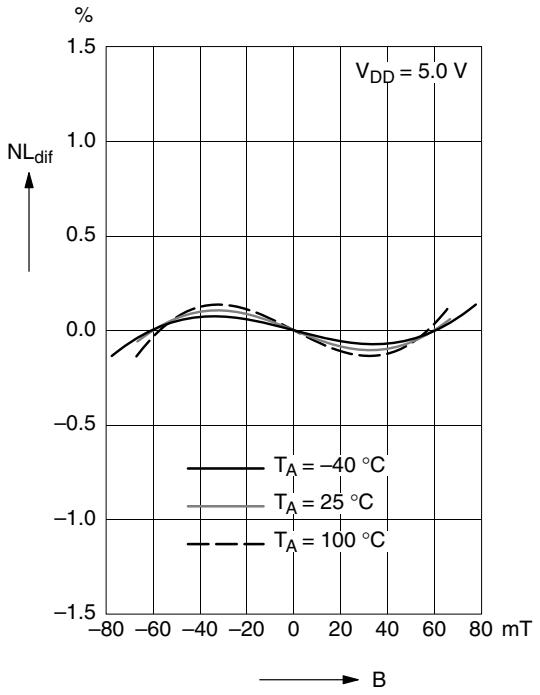

Fig. 3–7: Typical non-linearity of differential output versus magnetic flux density

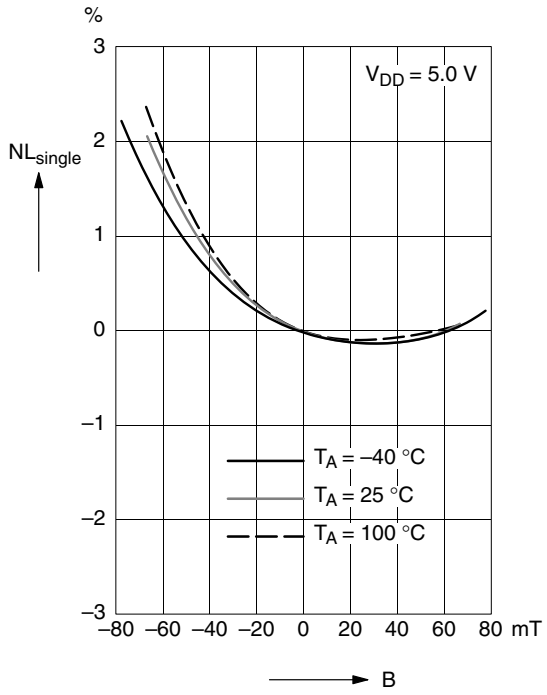

Fig. 3–9: Typical non-linearity of single-ended output versus magnetic flux density

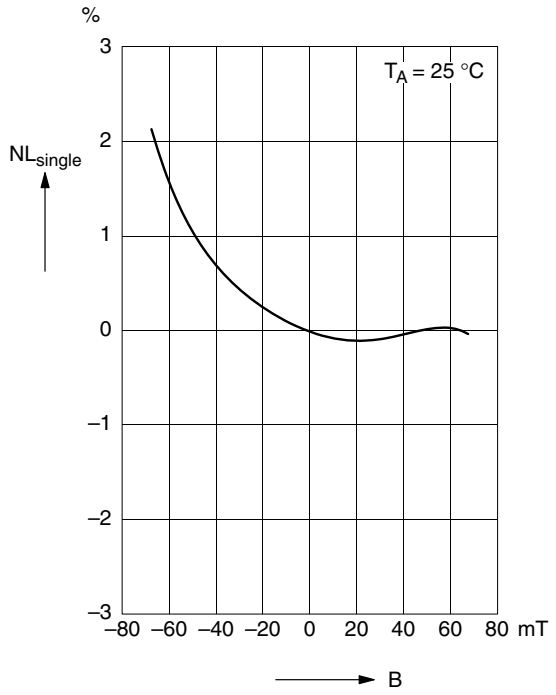

Fig. 3–8: Typical single-ended non-linearity versus magnetic flux density

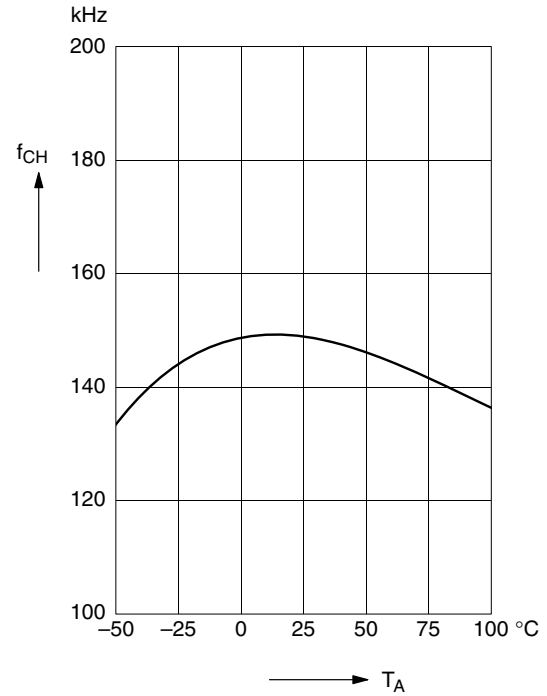

Fig. 3–10: Typical chopper frequency versus ambient temperature

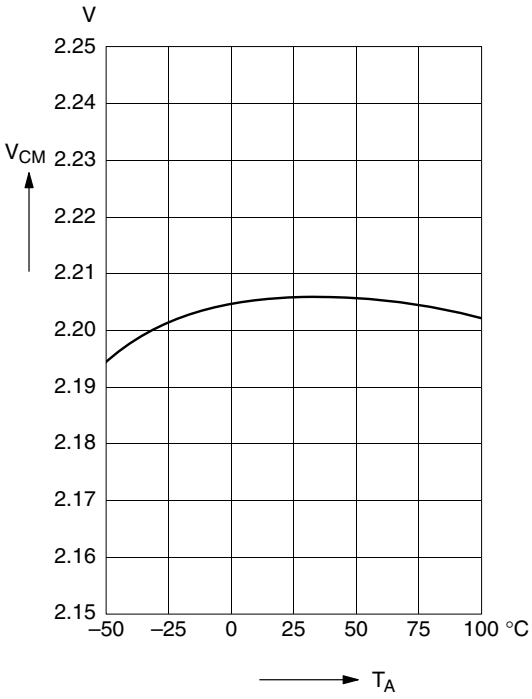

Fig. 3–11: Typical common mode output voltage versus ambient temperature

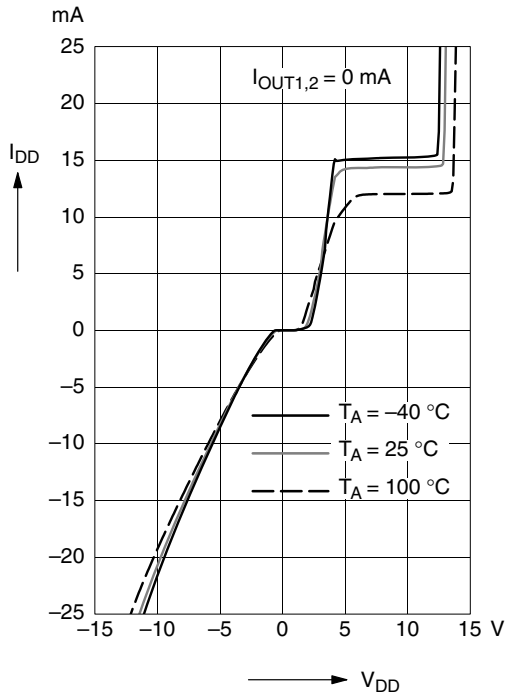

Fig. 3–13: Typical supply current versus supply voltage

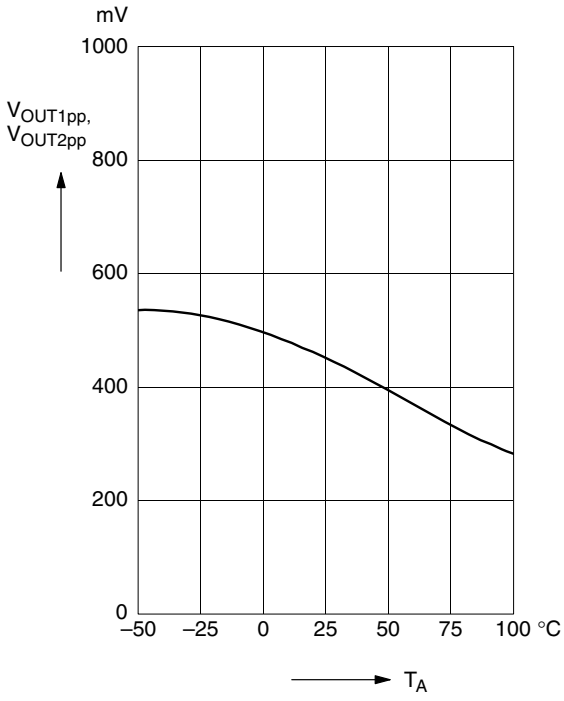

Fig. 3–12: Typical output AC voltage versus ambient temperature

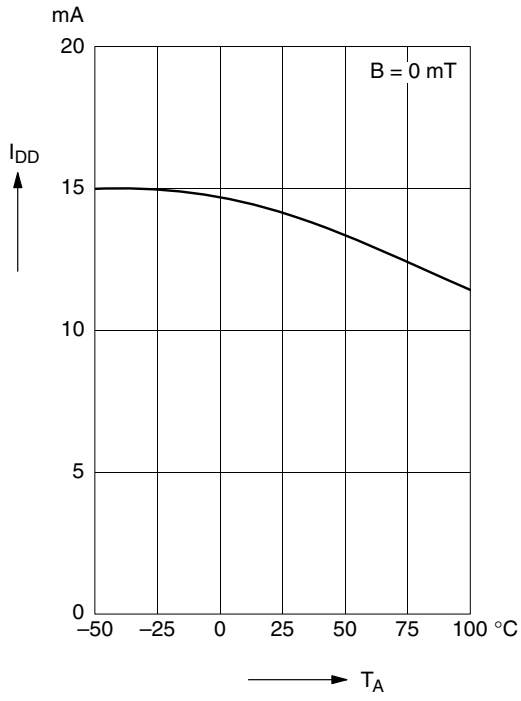

Fig. 3–14: Typical supply current versus temperature

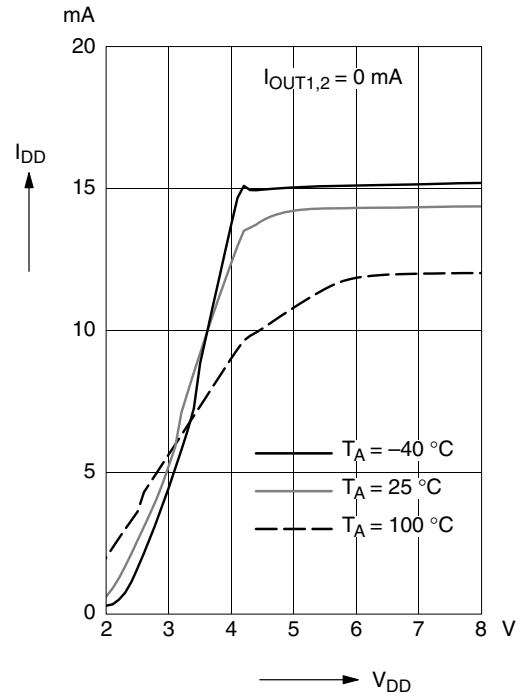

Fig. 3–15: Typical supply current versus supply voltage

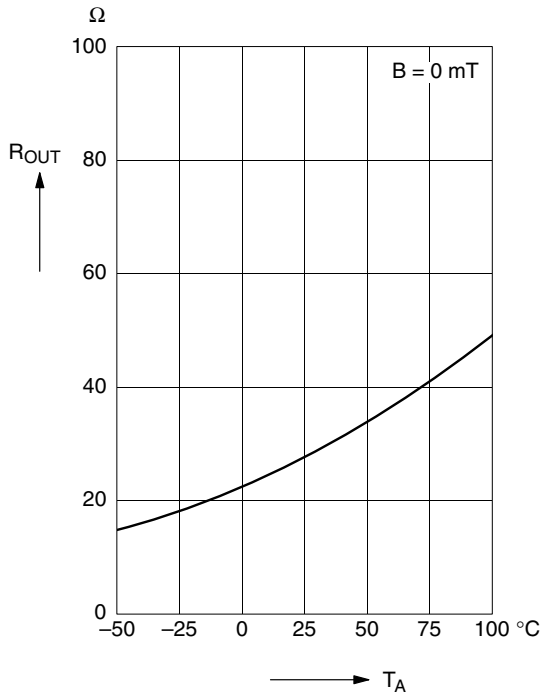

Fig. 3–17: Typical dynamic differential output resistance versus temperature

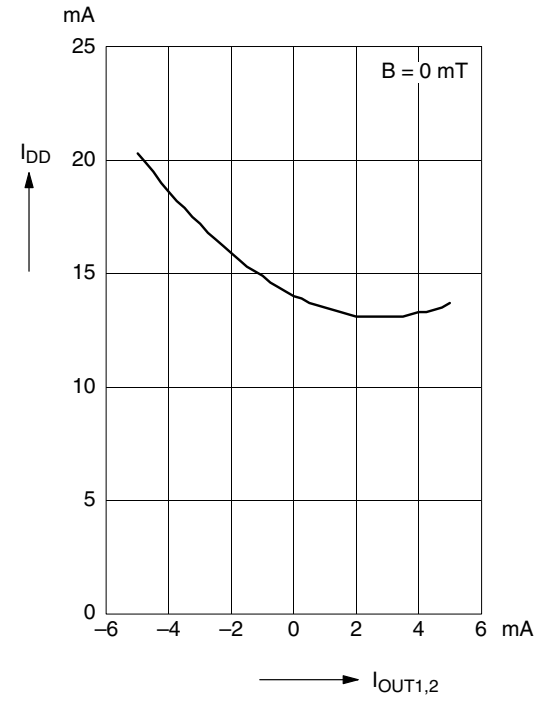

Fig. 3–16: Typical supply current versus output current

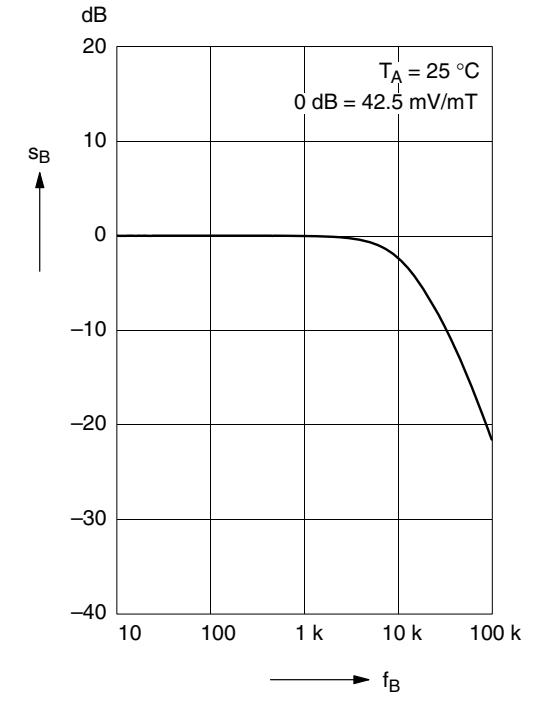

Fig. 3–18: Typical magnetic frequency response

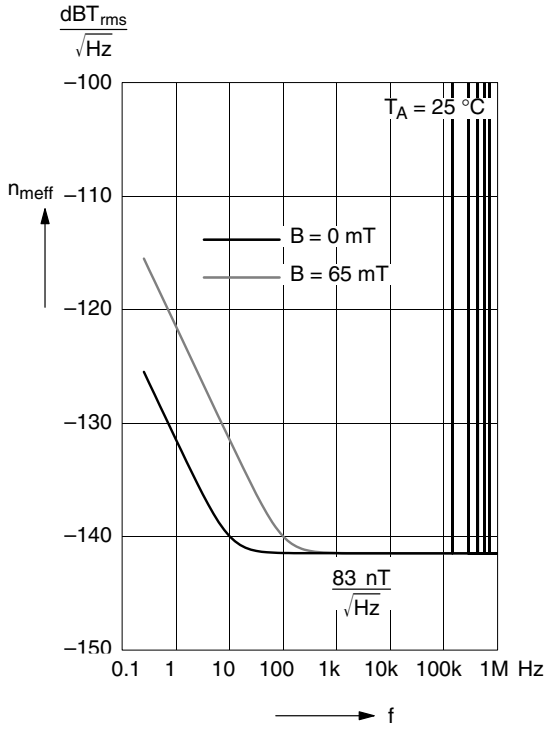

Fig. 3–19: Typical magnetic noise spectrum

4. Application Notes

Mechanical stress on the device surface (caused by the package of the sensor module or overmolding) can influence the sensor performance.

The parameter $V_{OUTACpp}$ (see Fig. 2–2) increases with external mechanical stress. This can cause linearity errors at the limits of the recommended operation conditions.

4.1. Ambient Temperature

Due to internal power dissipation, the temperature on the silicon chip (junction temperature T_J) is higher than the temperature outside the package (ambient temperature T_A).

$T_J = T_A + \Delta T$

At static conditions and continuous operation, the following equation applies:

$\Delta T = I_{DD} * V_{DD} * R_{thJSB}$

For typical values, use the typical parameters. For worst case calculation, use the max. parameters for I_{DD} and R_{th}, and the max. value for V_{DD} from the application.

For all sensors, the junction temperature range T_J is specified. The maximum ambient temperature T_{Amax} can be calculated as:

$T_{Amax} = T_{Jmax} - \Delta T$

4.2. EMC and ESD

Please contact Micronas for detailed information on EMC and ESD results.

4.3. Application Circuit

The normal integrating characteristics of a voltmeter is sufficient for signal filtering.

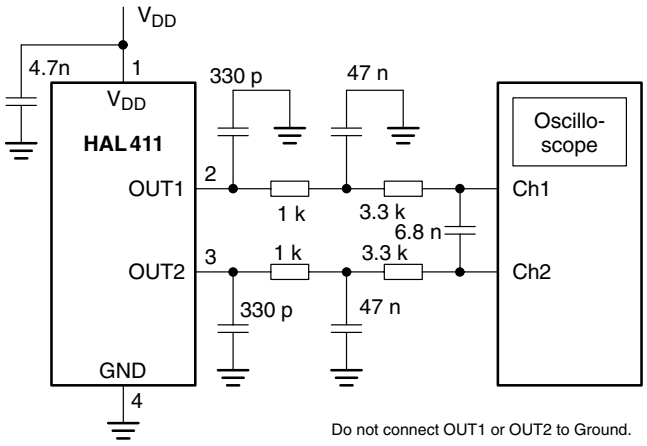

Fig. 4–1: Filtering of output signals

Display the difference between channel 1 and channel 2 to show the Hall voltage. Capacitors 4.7 nF and 330 pF for electromagnetic immunity are recommended.

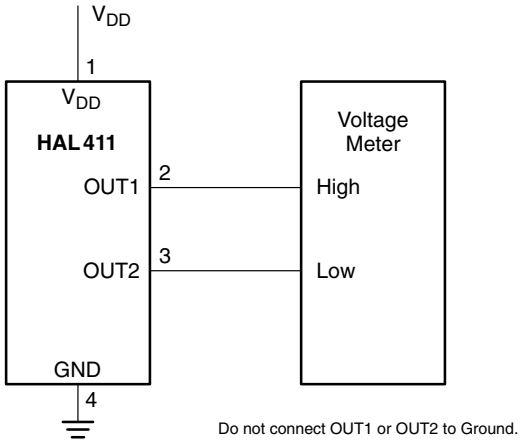

Fig. 4–2: Flux density measurement with voltmeter

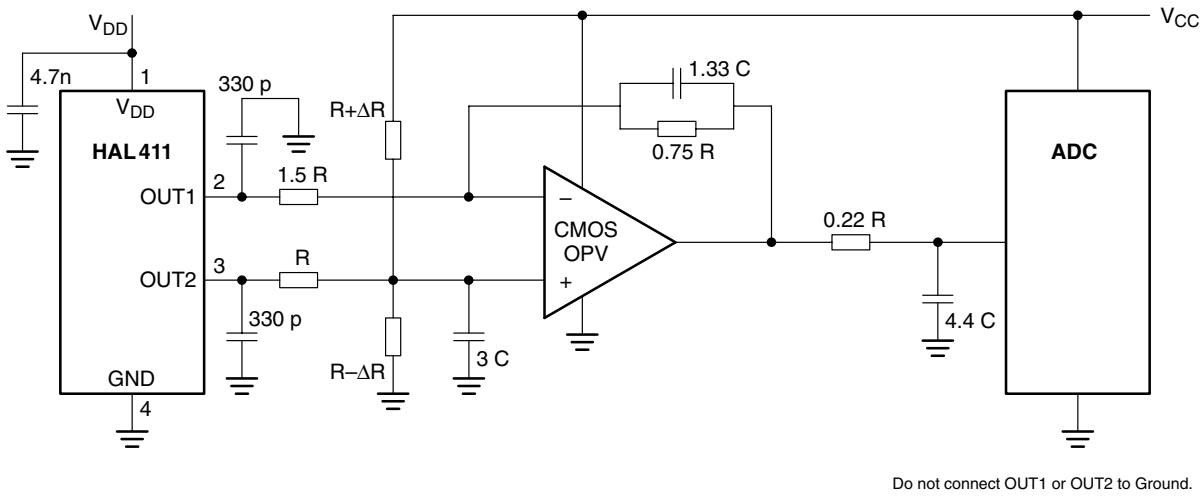

Fig. 4–3: Differential HAL411 output to single-ended output
R = 10 kΩ, C = 7.5 nF, ΔR for offset adjustment, BW_{-3dB} = 1.3 kHz

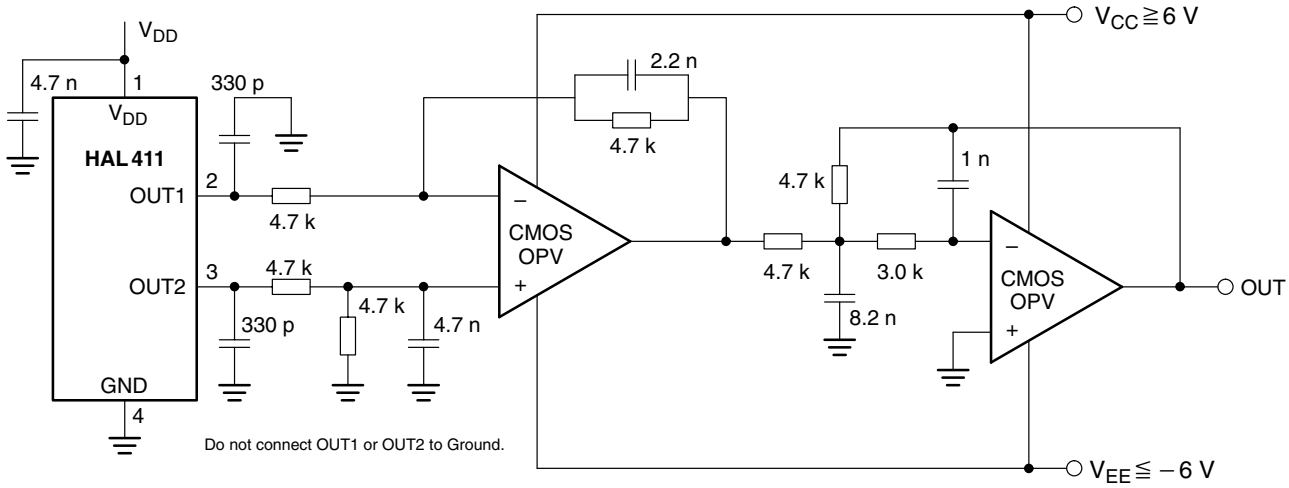

Fig. 4–4: Differential HAL411 output to single-ended output (referenced to ground), filter – BW_{-3dB} = 14.7 kHz

5. Data Sheet History

1. Final data sheet: “HAL411 Linear Hall Effect Sensor IC”, Aug. 6, 2003, 6251-584-1DS. First release of the final data sheet.

2. Final Data Sheet: “HAL411 Linear Hall Effect Sensor IC”, Dec. 8, 2008, DSH000019_002EN
Second release of the final data sheet.
Major changes:

– Section 1.5. “Solderability and Welding” updated

– package diagrams updated

– Section 3.4.1. “Storage and Shelf Life” updated

Micronas GmbH
Hans-Bunte-Strasse 19 · D-79108 Freiburg · P.O. Box 840 · D-79008 Freiburg, Germany
Tel. +49-761-517-0 · Fax +49-761-517-2174 · E-mail: docservice@micronas.com · Internet: www.micronas.com