Data Sheet | September 11, 2007 | FN3679.12

400MHz, 4x1 Video Crosspoint Switch

The HA4314B is a very wide bandwidth 4x1 crosspoint switch ideal for professional video switching, HDTV, computer monitor routing, and other high performance applications. The circuit features very low power dissipation (105mW Enabled, 4mW Disabled), excellent differential gain and phase, and very high off isolation. When disabled, the output is switched to a high impedance state, making the HA4314B ideal for routing matrix equipment.

The HA4314B requires no external current source, and features fast switching and symmetric slew rates.

For a 4x1 crosspoint with Tally outputs (channel indicators) or with synchronous control signals, please refer to the HA4404B and HA4344B data sheets, respectively.

For audio channels requiring larger signal swings, please refer to the CD22M3494 (16x8) data sheet.

Ordering Information

PART NUMBER	PART MARKING	TEMP. RANGE (°C)	PACKAGE	PKG. DWG. #
HA4314BCA	HA 4314BCA	0 to +70	16 Ld QSOP	M16.15A
HA4314BCAZ* (Note)	HA43 14BCAZ	0 to +70	16 Ld QSOP (Pb-free)	M16.15A
HA4314BCB*	HA4314BCB	0 to +70	14 Ld SOIC	M14.15
HA4314BCBZ* (Note)	4314BCBZ	0 to +70	14 Ld SOIC (Pb-free)	M14.15
HA4314BCP	HA4314BCP	0 to +70	14 Ld PDIP	E14.3
HA4314BCPZ (Note)	HA4314BCPZ	0 to +70	14 Ld PDIP** (Pb-free)	E14.3

*Add “96” suffix for tape and reel. Please refer to TB347 for details on reel specifications.

**Pb-free PDIPs can be used for through hole wave solder processing only. They are not intended for use in Reflow solder processing applications

NOTE: These Intersil Pb-free plastic packaged products employ special Pb-free material sets; molding compounds/die attach materials and 100% matte tin plate PLUS ANNEAL - e3 termination finish, which is RoHS compliant and compatible with both SnPb and Pb-free soldering operations. Intersil Pb-free products are MSL classified at Pb-free peak reflow temperatures that meet or exceed the Pb-free requirements of IPC/JEDEC J STD-020.

Features

- Low Power Dissipation 105mW
- Symmetrical Slew Rates. 1400V/µs
- 0.1dB Gain Flatness 100MHz
- -3dB Bandwidth. 400MHz
- Off Isolation (100MHz) 70dB
- Crosstalk Rejection (30MHz) 80dB
- Differential Gain and Phase . . . . . 0.01%/0.01 °
- High ESD Rating. . . . . >2000V
- TTL Compatible Control Inputs
- Improved Replacement for GX4314 and GX4314L
- Pb-Free Available (RoHS Compliant)

Applications

- Professional Video Switching and Routing
- HDTV
- Computer Graphics
- RF Switching and Routing
- PCM Data Routing

Truth Table

CS	A1	A0	OUT
0	0	0	IN0
0	0	1	IN1
0	1	0	IN2
0	1	1	IN3
1	X	X	HIGH - Z

CAUTION: These devices are sensitive to electrostatic discharge; follow proper IC Handling Procedures.
1-888-INTERSIL or 1-888-468-3774 | Intersil (and design) is a registered trademark of Intersil Americas Inc.
Copyright Intersil Americas Inc. 2004, 2006, 2007. All Rights Reserved
All other trademarks mentioned are the property of their respective owners.

Pinouts

HA4314B
(14 LD SOIC, PDIP)
TOP VIEW

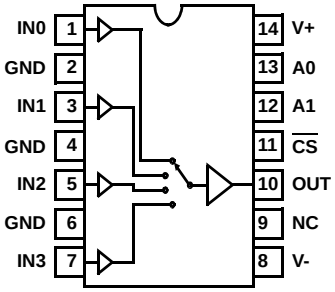

HA4314B
(16 LD QSOP)
TOP VIEW

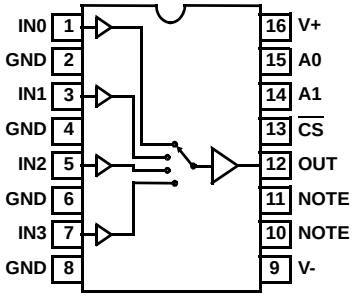

NOTE: These pins must be left floating or connected to ground

Absolute Maximum Ratings

Voltage Between V+ and V- 12V
Input Voltage . . . . . V_{SUPPLY}
Digital Input Current (Note 2) . . . . . ±25mA
Analog Input Current (Note 2) . . . . . ±5mA
Output Current 20mA
ESD Rating
Human Body Model (Per MIL-STD-883 Method 3015.7) 2000V

Operating Conditions

Temperature Range . . . . . 0°C to +70°C

Thermal Information

Thermal Resistance (Typical, Note 1)	θ_{JA} (°C/W)
14 Ld PDIP Package*	95
14 Ld SOIC Package	120
16 Ld QSOP Package	140

Maximum Junction Temperature (Die) . . . . . +175°C
Maximum Junction Temperature (Plastic Package) . . . . . +150°C
Maximum Storage Temperature Range . . . . . -65°C to +150°C
Pb-free reflow profile . . . . . .see link below
http://www.intersil.com/pbfree/Pb-FreeReflow.asp
*Pb-free PDIPs can be used for through hole wave solder processing only. They are not intended for use in Reflow solder processing applications.

CAUTION: Do not operate at or near the maximum ratings listed for extended periods of time. Exposure to such conditions may adversely impact product reliability and result in failures not covered by warranty.

NOTES:

1. θ_{JA} is measured with the component mounted on a low effective thermal conductivity test board in free air. See Tech Brief TB379 for details.
2. If an input signal is applied before the supplies are powered up, the input current must be limited to these maximum values.

Electrical Specifications

V_{SUPPLY} = ±5V, R_L = 10kΩ, $V_{\overline{CS}}$ = 0.8V, Unless Otherwise Specified.

PARAMETER	TEST CONDITIONS	TEMP. (°C)	MIN (Note 4)	TYP	MAX (Note 4)	UNITS
DC SUPPLY CHARACTERISTICS						
Supply Voltage		Full	±4.5	±5.0	±5.5	V
Supply Current (V_{OUT} = 0V)	$V_{\overline{CS}}$ = 0.8V	25, 70	-	10.5	13	mA
	$V_{\overline{CS}}$ = 0.8V	0	-	-	15.5	mA
	$V_{\overline{CS}}$ = 2.0V	25, 70	-	400	450	µA
	$V_{\overline{CS}}$ = 2.0V	0	-	400	580	µA
ANALOG DC CHARACTERISTICS						
Output Voltage Swing without Clipping	$V_{OUT} = V_{IN} \pm V_{IO} \pm 20mV$	25, 70	±2.7	±2.8	-	V
		0	±2.4	±2.5	-	V
Output Current		Full	15	20	-	mA
Input Bias Current		Full	-	30	50	µA
Output Offset Voltage		Full	-10	-	10	mV
Output Offset Voltage Drift (Note 3)		Full	-	25	50	µV/°C
SWITCHING CHARACTERISTICS						
Turn-On Time		25	-	160	-	ns
Turn-Off Time		25	-	320	-	ns
Output Glitch During Switching		25	-	±10	-	mV
DIGITAL DC CHARACTERISTICS						
Input Logic High Voltage		Full	2	-	-	V
Input Logic Low Voltage		Full	-	-	0.8	V
Input Current	0V to 4V	Full	-2	-	2	µA
AC CHARACTERISTICS						
Insertion Loss	$1V_{P-P}$	25	-	0.055	0.063	dB
		Full	-	0.07	0.08	dB
Channel-to-Channel Insertion Loss Match		Full	-	±0.004	±0.006	dB

Electrical Specifications V_{SUPPLY} = ±5V, R_L = 10kΩ, $V_{\overline{CS}}$ = 0.8V, Unless Otherwise Specified. **(Continued)**

PARAMETER	TEST CONDITIONS	TEMP. (°C)	MIN (Note 4)	TYP	MAX (Note 4)	UNITS
-3dB Bandwidth	R_S = 50Ω, C_L = 10pF	25	-	400	-	MHz
	R_S = 20Ω, C_L = 20pF	25	-	280	-	MHz
	R_S = 16Ω, C_L = 36pF	25	-	140	-	MHz
	R_S = 13Ω, C_L = 49pF	25	-	110	-	MHz
±0.1dB Flat Bandwidth	R_S = 50Ω, C_L = 10pF	25	-	100	-	MHz
	R_S = 20Ω, C_L = 20pF	25	-	100	-	MHz
	R_S = 16Ω, C_L = 36pF	25	-	85	-	MHz
	R_S = 13Ω, C_L = 49pF	25	-	75	-	MHz
Input Resistance		Full	200	400	-	kΩ
Input Capacitance		Full	-	1.5	-	pF
Enabled Output Resistance		Full	-	15	-	Ω
Disabled Output Capacitance	$V_{\overline{CS}}$ = 2.0V	Full	-	2.5	-	pF
Differential Gain	4.43MHz, (Note 3)	25	-	0.01	0.02	%
Differential Phase	4.43MHz, (Note 3)	25	-	0.01	0.02	°
Off Isolation	$1V_{P-P}$, 100MHz, $V_{\overline{CS}}$ = 2.0V, R_L = 10Ω	Full	-	70	-	dB
Crosstalk Rejection	$1V_{P-P}$, 30MHz	Full	-	80	-	dB
Slew Rate ($1.5V_{P-P}$, +SR/-SR)	R_S = 50Ω, C_L = 10pF	25	-	1425/1450	-	V/µs
	R_S = 20Ω, C_L = 20pF	25	-	1010/1010	-	V/µs
	R_S = 16Ω, C_L = 36pF	25	-	725/750	-	V/µs
	R_S = 13Ω, C_L = 49pF	25	-	600/650	-	V/µs
Total Harmonic Distortion	10MHz, R_L = 1kΩ, (Note 3)	Full	-	0.01	0.1	%
Disabled Output Resistance	$V_{\overline{CS}}$ = 2.0V	Full	-	12	-	MΩ

NOTES:

3. Limits should be considered typical and are not production tested.
4. Parts are 100% tested at +25°C. Over-temperature limits established by characterization and are not production tested.

AC Test Circuit

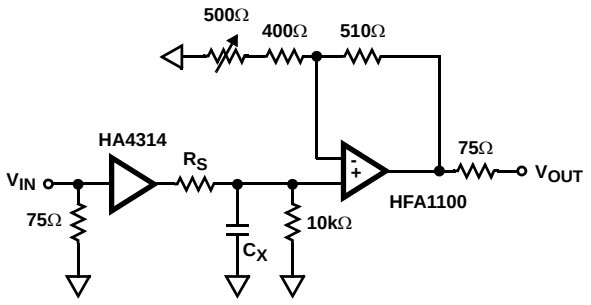

NOTE: $C_L = C_X$ + Test Fixture Capacitance.

PC Board Layout

The frequency response of this circuit depends greatly on the care taken in designing the PC board. **The use of low inductance components such as chip resistors and chip capacitors is strongly recommended, while a solid ground plane is a must!**

Attention should be given to decoupling the power supplies. A large value (10µF) tantalum in parallel with a small value (0.1µF) chip capacitor works well in most cases.

Keep input and output traces as short as possible, because trace inductance and capacitance can easily become the performance limiting items.

Application Information

General

The HA4314B is a 4x1 crosspoint switch that is ideal for the matrix element of high performance switchers and routers. This crosspoint's low input capacitance and high input resistance provide excellent video terminations when used with an external 75Ω resistor. Nevertheless, if several HA4314B inputs are connected together, the use of an input buffer should be considered (see Figure 1). This crosspoint contains no feedback or gain setting resistors, so the output is a true high impedance load when the IC is disabled ($\overline{CS}$ = 1).

Ground Connections

All GND pins are connected to a common point on the die, so any one of them will suffice as the functional GND connection. For the best isolation and crosstalk rejection, however, all GND pins must connect to the GND plane.

Frequency Response

Most applications utilizing the HA4314B require a series output resistor, R_S, to tune the response for the specific load capacitance, C_L, driven. Bandwidth and slew rate degrade as C_L increases (as shown in the "Electrical Specifications" on page 4), so give careful consideration to component placement to minimize trace length. In big matrix configurations where C_L is large, better frequency response is obtained by cascading two levels of crosspoints in the case of multiplexed outputs (see Figure 2), or distributing the load between two drivers if C_L is due to bussing and subsequent stage input capacitance.

Control Signals

$\overline{CS}$ - This is a TTL/CMOS compatible, active low Chip Select input. When driven high, $\overline{CS}$ forces the output to a true high impedance state and reduces the power dissipation by a factor of 25. The $\overline{CS}$ input has no on-chip pull-down resistor, so it must be connected to a logic low (recommend GND) if the enable function isn't utilized.

A0, A1 - These are binary coded, TTL/CMOS compatible address inputs that select which one of the four inputs connect to the crosspoint output.

Switcher/Router Applications

Figure 1 illustrates one possible implementation of a wideband, low power, 4x4 switcher/router utilizing the HA4314B for the switch matrix. A 4x4 switcher/router allows any of the four outputs to be driven by any one of the four inputs (e.g., each of the four inputs may connect to a different output, or an input may connect to multiple outputs). This application utilizes the HA4600 (video buffer with output disable) for the input buffer, the HA4314B as the switch matrix, and the HFA1112 (programmable gain buffer) as the gain of two output driver. Figure 2 details a 16x1 switcher (basically a 16:1 mux) which uses the HA4201 (1x1 crosspoint) and the HA4314B in a cascaded stage configuration to minimize capacitive loading at each output node, thus increasing system bandwidth.

Power-Up Considerations

No signals should be applied to the analog or digital inputs before the power supplies are activated. Latch-up may occur if the inputs are driven at the time of power-up. To prevent latch-up, the input currents during power-up must not exceed the values listed in the "Absolute Maximum Ratings" on page 3.

Intersil's Crosspoint Family

Intersil offers a variety of 4x1 and 1x1 crosspoint switches. In addition to the HA4314B, the 4x1 family includes the HA4404 and HA4344. The HA4404 is a 16 Ld device with Tally outputs to indicate the selected channel. The HA4344 is a 16 Ld crosspoint with synchronized control lines (A0, A1, $\overline{CS}$). With synchronization, the control information for the next channel switch can be loaded into the crosspoint without affecting the current state. On a subsequent clock edge the stored control state effects the desired channel switch.

The 1x1 family is comprised of the HA4201 and HA4600. They are essentially similar devices, but the HA4201 includes a Tally output (enable indicator). The 1x1s are useful as high performance video input buffers, or in a switch matrix requiring very high off isolation.

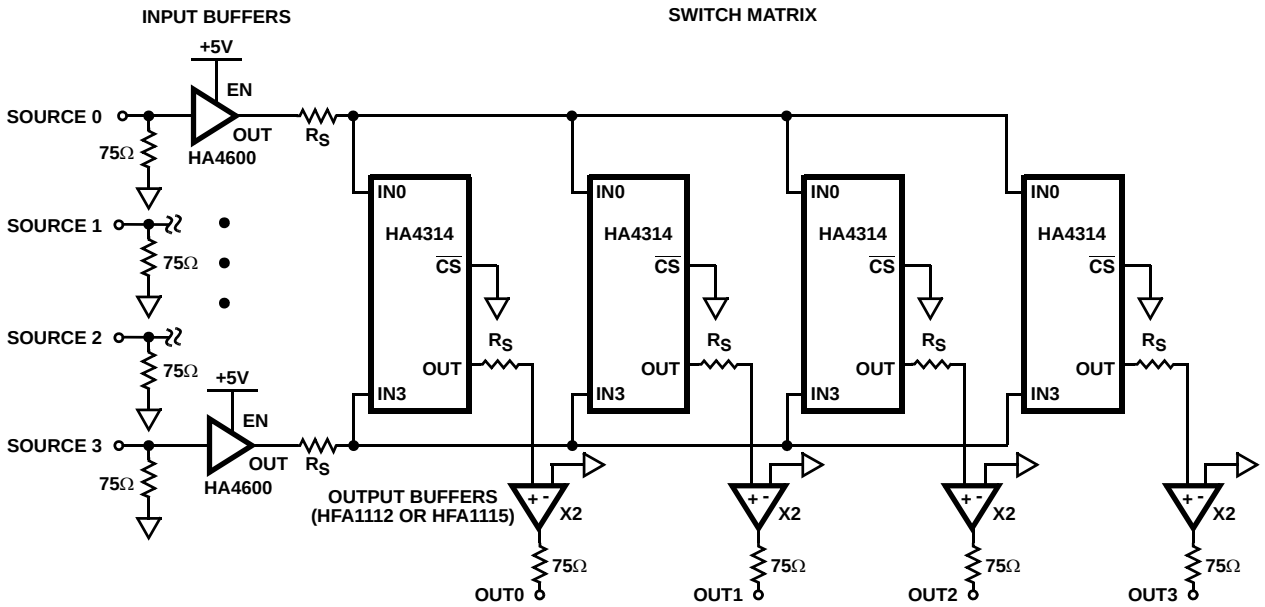

FIGURE 1. 4x4 SWITCHER/ROUTER APPLICATION

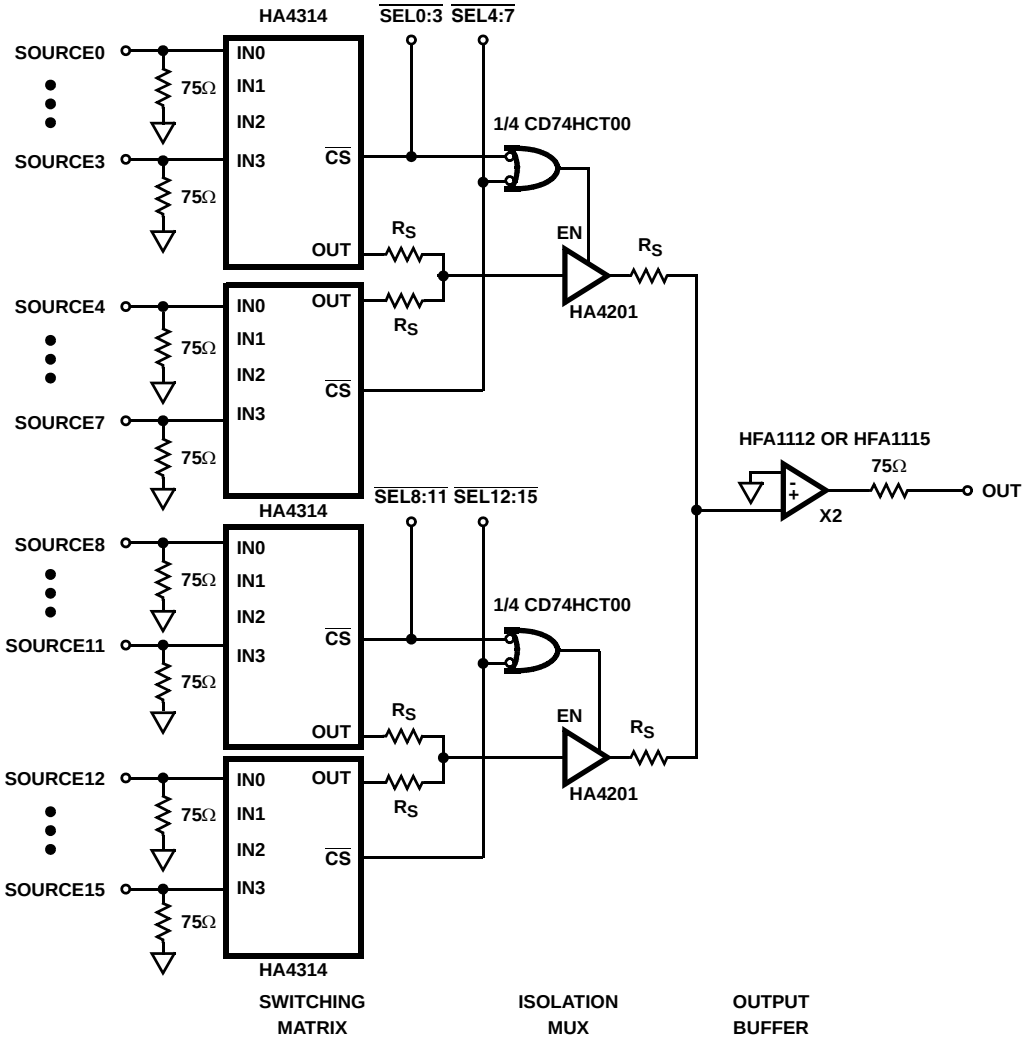

FIGURE 2. 16x1 SWITCHER APPLICATION

Typical Performance Curves $V_{SUPPLY} = \pm5V$, $T_A = +25°C$, $R_L = 10k\Omega$, Unless Otherwise Specified

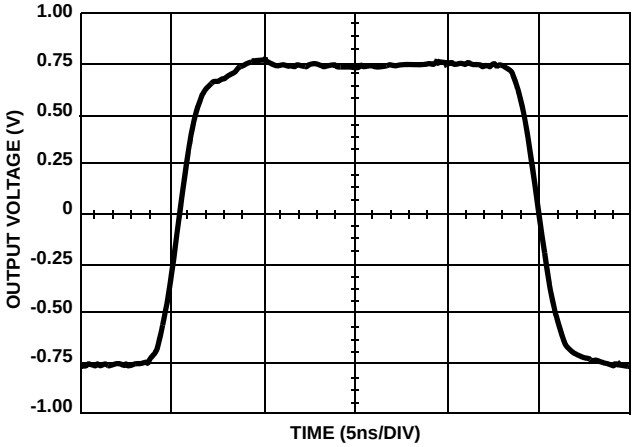

FIGURE 3. LARGE SIGNAL PULSE RESPONSE

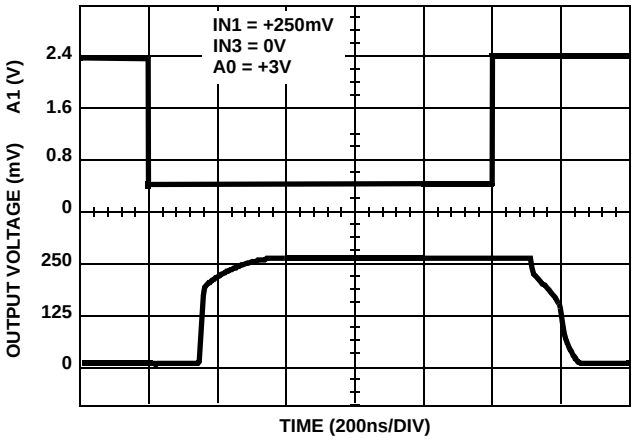

FIGURE 4. CHANNEL-TO-CHANNEL SWITCHING RESPONSE

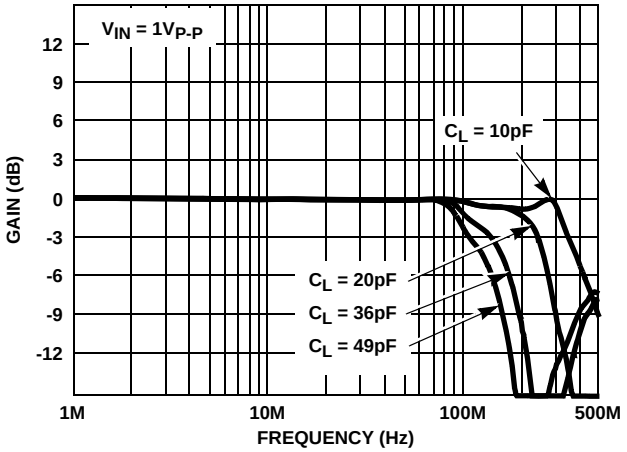

FIGURE 5. FREQUENCY RESPONSE

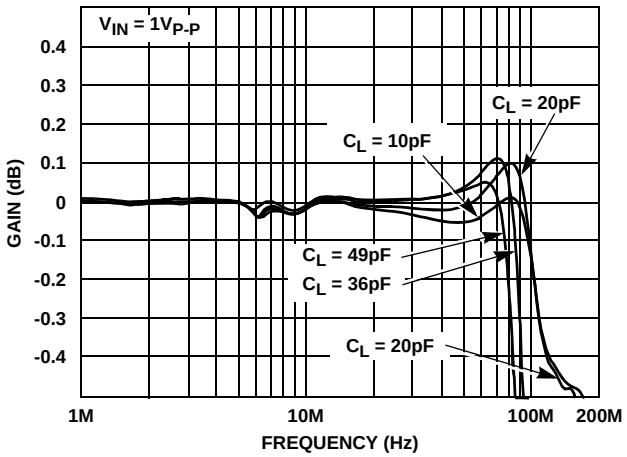

FIGURE 6. GAIN FLATNESS

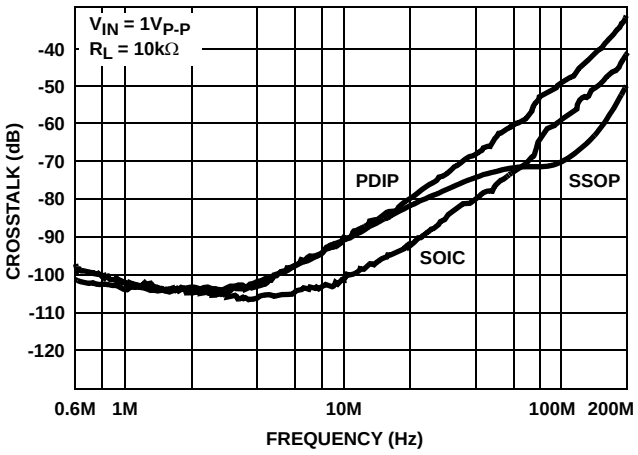

FIGURE 7. ALL HOSTILE CROSSTALK REJECTION

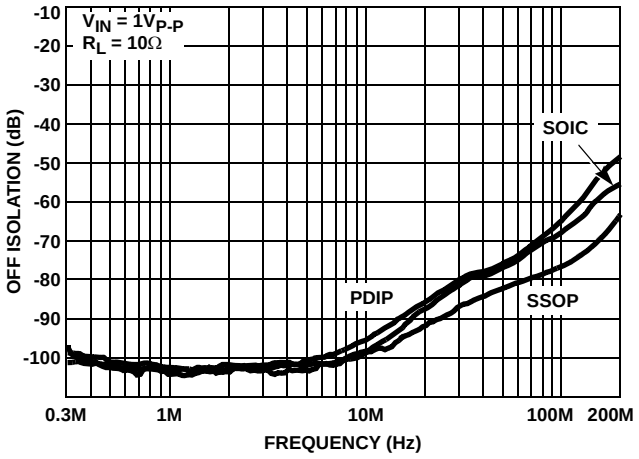

FIGURE 8. ALL HOSTILE OFF ISOLATION

Typical Performance Curves $V_{SUPPLY} = \pm5V$, $T_A = +25°C$, $R_L = 10k\Omega$, Unless Otherwise Specified **(Continued)**

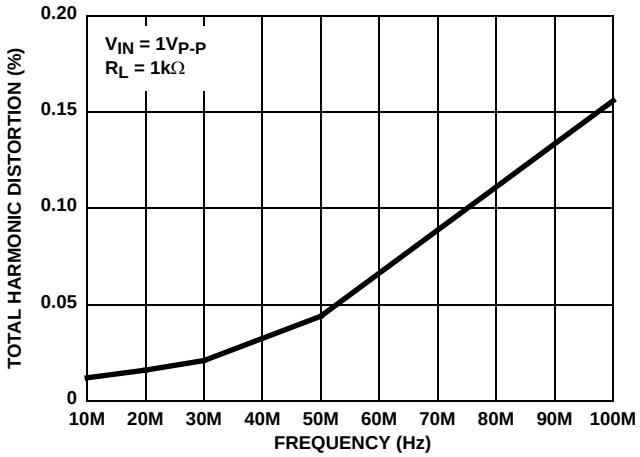

FIGURE 9. TOTAL HARMONIC DISTORTION vs FREQUENCY

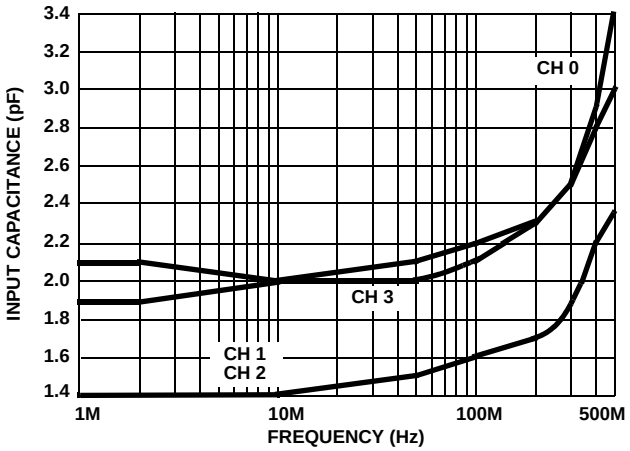

FIGURE 10. INPUT CAPACITANCE vs FREQUENCY

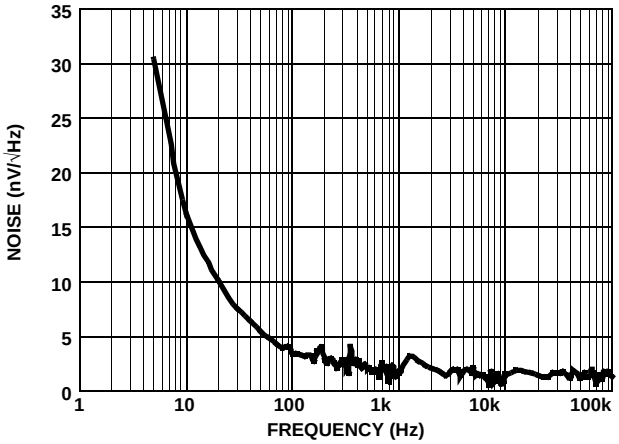

FIGURE 11. NOISE vs FREQUENCY

Die Characteristics

DIE DIMENSIONS:

65 milsx118 milsx19 mils
1640µmx3000µmx483µm

METALLIZATION:

Type: Metal 1: AlCu (1%)/TiW
Thickness: Metal 1: 6kÅ ±0.8kÅ
Type: Metal 2: AlCu (1%)
Thickness: Metal 2: 16kÅ ±1.1kÅ

PASSIVATION:

Type: Nitride
Thickness: 4kÅ ±0.5kÅ

TRANSISTOR COUNT:

200

SUBSTRATE POTENTIAL (POWERED UP):

V-

Metallization Mask Layout

HA4314B

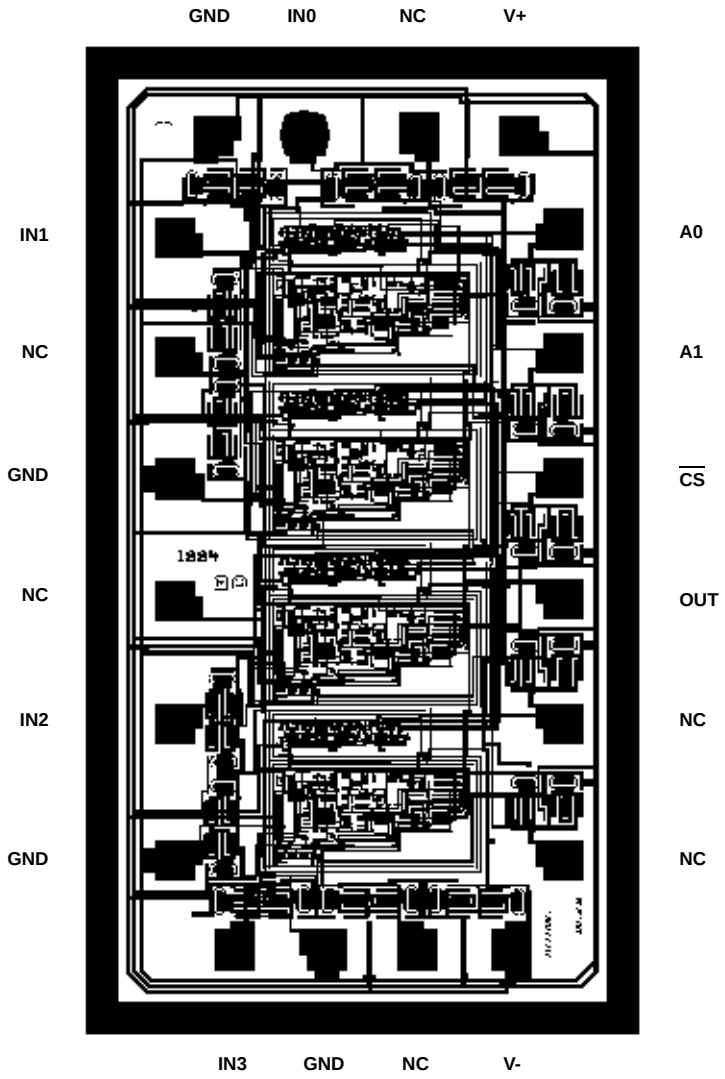

Dual-In-Line Plastic Packages (PDIP)

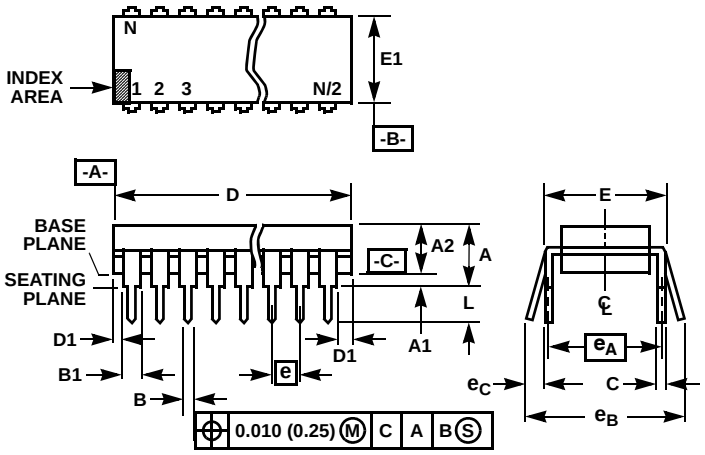

NOTES:

1. Controlling Dimensions: INCH. In case of conflict between English and Metric dimensions, the inch dimensions control.
2. Dimensioning and tolerancing per ANSI Y14.5M-1982.
3. Symbols are defined in the “MO Series Symbol List” in Section 2.2 of Publication No. 95.
4. Dimensions A, A1 and L are measured with the package seated in JEDEC seating plane gauge GS-3.
5. D, D1, and E1 dimensions do not include mold flash or protrusions. Mold flash or protrusions shall not exceed 0.010 inch (0.25mm).
6. E and e_A are measured with the leads constrained to be perpendicular to datum -C-.
7. e_B and e_C are measured at the lead tips with the leads unconstrained. e_C must be zero or greater.
8. B1 maximum dimensions do not include dambar protrusions. Dambar protrusions shall not exceed 0.010 inch (0.25mm).
9. N is the maximum number of terminal positions.
10. Corner leads (1, N, N/2 and N/2 + 1) for E8.3, E16.3, E18.3, E28.3, E42.6 will have a B1 dimension of 0.030 - 0.045 inch (0.76 - 1.14mm).

E14.3 (JEDEC MS-001-AA ISSUE D)
14 LEAD DUAL-IN-LINE PLASTIC PACKAGE

SYMBOL	INCHES		MILLIMETERS		NOTES
	MIN	MAX	MIN	MAX	
A	-	0.210	-	5.33	4
A1	0.015	-	0.39	-	4
A2	0.115	0.195	2.93	4.95	-
B	0.014	0.022	0.356	0.558	-
B1	0.045	0.070	1.15	1.77	8
C	0.008	0.014	0.204	0.355	-
D	0.735	0.775	18.66	19.68	5
D1	0.005	-	0.13	-	5
E	0.300	0.325	7.62	8.25	6
E1	0.240	0.280	6.10	7.11	5
e	0.100 BSC		2.54 BSC		-
e_A	0.300 BSC		7.62 BSC		6
e_B	-	0.430	-	10.92	7
L	0.115	0.150	2.93	3.81	4
N	14		14		9

Rev. 0 12/93

Small Outline Plastic Packages (SOIC)

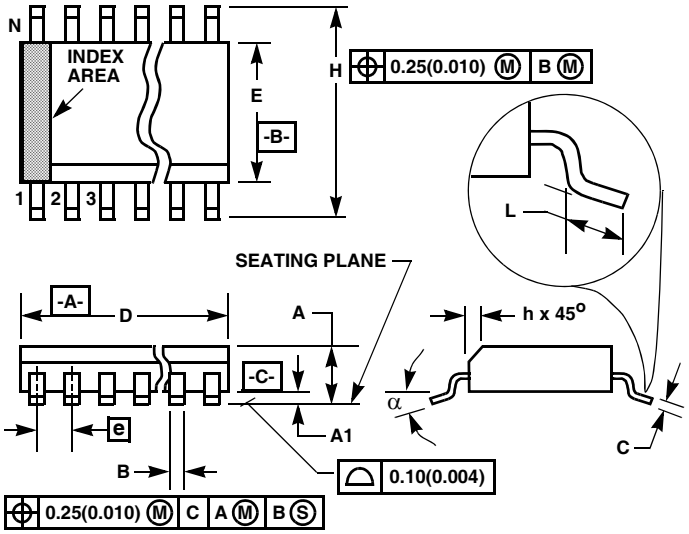

NOTES:

1. Symbols are defined in the “MO Series Symbol List” in Section 2.2 of Publication Number 95.
2. Dimensioning and tolerancing per ANSI Y14.5M-1982.
3. Dimension “D” does not include mold flash, protrusions or gate burrs. Mold flash, protrusion and gate burrs shall not exceed 0.15mm (0.006 inch) per side.
4. Dimension “E” does not include interlead flash or protrusions. Interlead flash and protrusions shall not exceed 0.25mm (0.010 inch) per side.
5. The chamfer on the body is optional. If it is not present, a visual index feature must be located within the crosshatched area.
6. “L” is the length of terminal for soldering to a substrate.
7. “N” is the number of terminal positions.
8. Terminal numbers are shown for reference only.
9. The lead width “B”, as measured 0.36mm (0.014 inch) or greater above the seating plane, shall not exceed a maximum value of 0.61mm (0.024 inch).
10. Controlling dimension: MILLIMETER. Converted inch dimensions are not necessarily exact.

M14.15 (JEDEC MS-012-AB ISSUE C)
14 LEAD NARROW BODY SMALL OUTLINE PLASTIC PACKAGE

SYMBOL	INCHES		MILLIMETERS		NOTES
	MIN	MAX	MIN	MAX	
A	0.0532	0.0688	1.35	1.75	-
A1	0.0040	0.0098	0.10	0.25	-
B	0.013	0.020	0.33	0.51	9
C	0.0075	0.0098	0.19	0.25	-
D	0.3367	0.3444	8.55	8.75	3
E	0.1497	0.1574	3.80	4.00	4
e	0.050 BSC		1.27 BSC		-
H	0.2284	0.2440	5.80	6.20	-
h	0.0099	0.0196	0.25	0.50	5
L	0.016	0.050	0.40	1.27	6
N	14		14		7
α	0°	8°	0°	8°	-

Rev. 0 12/93

Shrink Small Outline Plastic Packages (SSOP)
Quarter Size Outline Plastic Packages (QSOP)

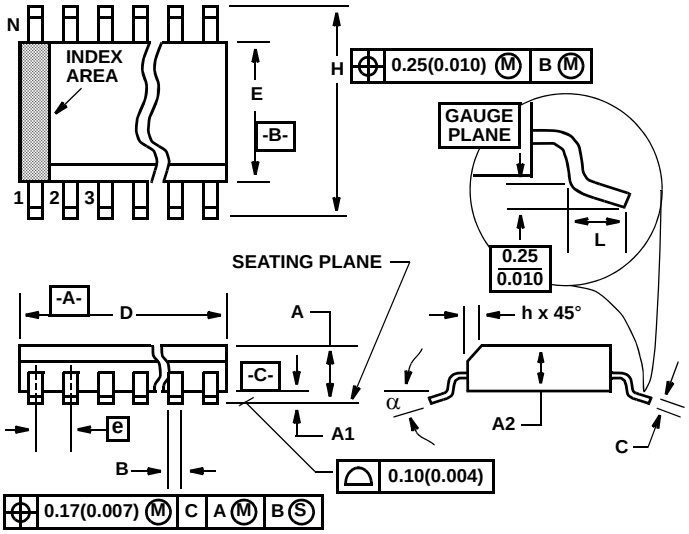

NOTES:

1. Symbols are defined in the “MO Series Symbol List” in Section 2.2 of Publication Number 95.
2. Dimensioning and tolerancing per ANSI Y14.5M-1982.
3. Dimension “D” does not include mold flash, protrusions or gate burrs. Mold flash, protrusion and gate burrs shall not exceed 0.15mm (0.006 inch) per side.
4. Dimension “E” does not include interlead flash or protrusions. Interlead flash and protrusions shall not exceed 0.25mm (0.010 inch) per side.
5. The chamfer on the body is optional. If it is not present, a visual index feature must be located within the crosshatched area.
6. “L” is the length of terminal for soldering to a substrate.
7. “N” is the number of terminal positions.
8. Terminal numbers are shown for reference only.
9. Dimension “B” does not include dambar protrusion. Allowable dambar protrusion shall be 0.10mm (0.004 inch) total in excess of “B” dimension at maximum material condition.
10. Controlling dimension: INCHES. Converted millimeter dimensions are not necessarily exact.

M16.15A

16 LEAD SHRINK SMALL OUTLINE PLASTIC PACKAGE (0.150” WIDE BODY)

SYMBOL	INCHES		MILLIMETERS		NOTES
	MIN	MAX	MIN	MAX	
A	0.061	0.068	1.55	1.73	-
A1	0.004	0.0098	0.102	0.249	-
A2	0.055	0.061	1.40	1.55	-
B	0.008	0.012	0.20	0.31	9
C	0.0075	0.0098	0.191	0.249	-
D	0.189	0.196	4.80	4.98	3
E	0.150	0.157	3.81	3.99	4
e	0.025 BSC		0.635 BSC		-
H	0.230	0.244	5.84	6.20	-
h	0.010	0.016	0.25	0.41	5
L	0.016	0.035	0.41	0.89	6
N	16		16		7
α	0°	8°	0°	8°	-

Rev. 2 6/04

All Intersil U.S. products are manufactured, assembled and tested utilizing ISO9000 quality systems.
Intersil Corporation’s quality certifications can be viewed at www.intersil.com/design/quality

Intersil products are sold by description only. Intersil Corporation reserves the right to make changes in circuit design, software and/or specifications at any time without notice. Accordingly, the reader is cautioned to verify that data sheets are current before placing orders. Information furnished by Intersil is believed to be accurate and reliable. However, no responsibility is assumed by Intersil or its subsidiaries for its use; nor for any infringements of patents or other rights of third parties which may result from its use. No license is granted by implication or otherwise under any patent or patent rights of Intersil or its subsidiaries.

For information regarding Intersil Corporation and its products, see www.intersil.com