HuaXinAn
华兴安电子

(Ø6x8mm)

3-Electrode Gas Discharge Tubes 5KA

Fast Delivery Time

RoHS

1：Dimension(mm)

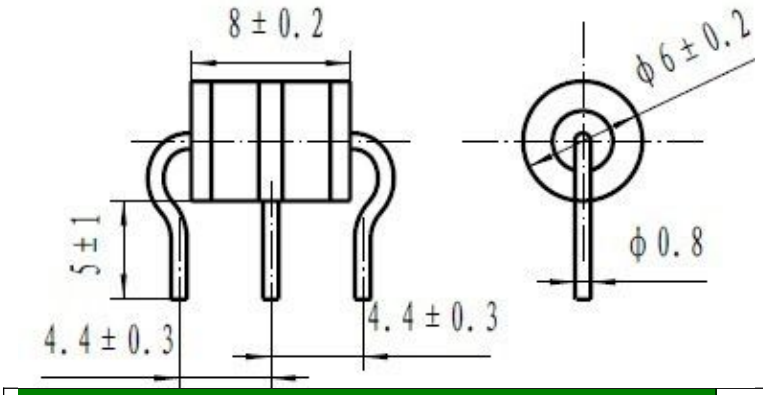



2:Main Applications

- •PCI Cards protection
- •Telephone/Fax/Modem protection
- •single line protection
- •ADSL/XDSL Splitter,Power Supply
- •Surge Protection Device/Surge Protector

- •100% Lead-Free(RoHs Compliant)
- •Non-Radioactive
- •Low capacitance (≤1pF)
- •Fast Response-time,High Insulation Resistance.
- •Small size :**Ø6x8**(mm)

4 Electrical Characteristics

Part Number	DC Spark-over Voltage @ 100V/S	Impulse Spark-over Voltage @100V/μs	Impulse Spark-over Voltage @1KV/μs	Insulation Resistance	Impulse discharge current(8/20μs)	AC discharge current (50Hz,1s,10times)	Capacitance (1MHz)
	V	V	V	GΩ	10 Times	A	PF
HA3R75B	75±20%	<500	<600	>1	5KA	10	≤1
HA3R90B	90±20%	<500	<600	>1	5KA	10	≤1
HA3R150B	150±20%	<500	<600	>1	5KA	10	≤1
HA3R230B	230±20%	<600	<700	>1	5KA	10	≤1
HA3R250B	250±20%	<600	<700	>1	5KA	10	≤1
HA3R300B	300±20%	<800	≤ 900	>1	5KA	10	≤1
HA3R350B	350±20%	<900	≤ 1000	>1	5KA	10	≤1
HA3R400B	400±20%	<900	≤ 1000	>1	5KA	10	≤1
HA3R420B	420±20%	<900	≤ 1000	>1	5KA	10	≤1
HA3R470B	470±20%	<1100	≤ 1200	>1	5KA	10	≤1
HA3R600B	600±20%	<1200	≤ 1300	>1	5KA	10	≤1

Packing Quantity : 100PCS

Cross Reference List (Ø5x7.6mm)

HUAAN Gas Discharge Tube Part Number	Cross Reference		
	Littelfuse Gas Discharge Tube Part Number	Bourns Gas Discharge Tube Part Number	TDK EPCOS Surge Arrester Part Number
HA3R75B	-		
HA3R90B	SL1003A090 R	2056-09-B3LF	T33-A90X B88069X2271B502
HA3R150B	-		
HA3R230B	SL1003A230 R	2056-23-B3LF	T33-A230X B88069X9800B502 T33-A230XF1 B88069X9550B502
HA3R250B	SL1003A250 R	2056-25-B3LF	
HA3R300B	SL1003A300 R		
HA3R350B	SL1003A350 R	2056-35-B3LF	T33-A350X B88069X1470B502
HA3R400B	SL1003A400 R	2056-40-B3LF	
HA3R420B	-	2056-42 -B3LF	
HA3R470B	-	2056-47-B3LF	
HA3R600B	-	2056-60-B3LF	

The above trademarks are belonging to the HUAAN LIMITED,Littelfuse .Bourns,TDK / EPCOS.

We do not ensure characteristics of HUAAN products just same as products of Littelfuse or bourns or TDK / EPCOS.