HUAAN 华兴安电子 HUAAN LIMITED

Φ5*7.6mm

3-Electrode Gas Discharge Tubes

5KA

Surface Mount

1：Dimension(mm)

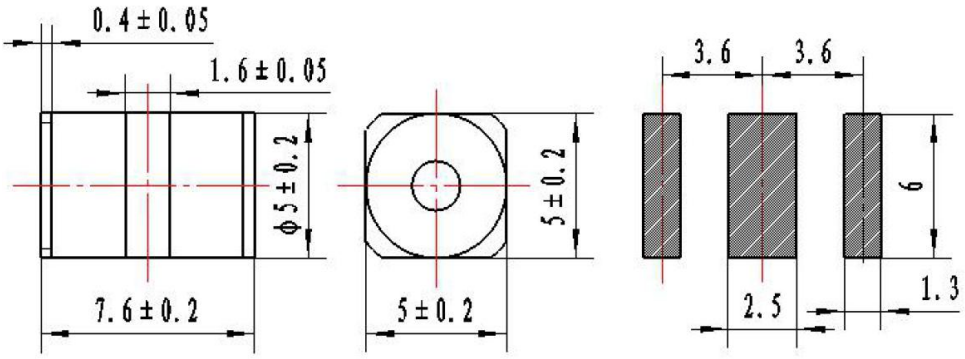



2:Main Applications

- •PCI Cards protection
- •Telephone/Fax/Modem protection
- •single line protection
- •ADSL/XDSL Splitter,Power Supply
- •Surge Protection Device/Surge Protector

3:Features

- •100% Lead-Free(RoHs Compliant)
- •Non-Radioactive
- •Low capacitance: ≤1pF
- •Small size :Φ5x7.6mm
- •Safety certification: File number: E505240

4 Electrical Characteristics

Part Number	DC Spark-over Voltage @100V/S	Impulse Spark-over Voltage @100V/μs	Impulse Spark-over Voltage @1KV/μs	Insulation Resistance GΩ	Impulse discharge current 8/20μs 10 Times	Impulse Life 300 hits 10x1000μs	AC discharge current 50Hz,1s 10times	Delivery time days	UL Certificate UL497B
HA3R5-75SMD	75V ±20%	≤500V	≤ 600V	>1GΩ	5KA	100A	5A	15days	E505240
HA3R5-90SMD	90V ±20%	≤500V	≤ 600V	>1GΩ	5KA	100A	5A	15days	E505240
HA3R5-140SMD	140V±20%	≤500V	≤ 600V	>1GΩ	5KA	100A	5A	15days	E505240
HA3R5-150SMD	150V±20%	≤500V	≤ 600V	>1GΩ	5KA	100A	5A	15days	E505240
HA3R5-200SMD	200V±20%	≤600V	≤ 700V	>1GΩ	5KA	100A	5A	15days	E505240
HA3R5-230SMD	230V±20%	≤600V	≤ 700V	>1GΩ	5KA	100A	5A	15days	E505240
HA3R5-250SMD	250V±20%	≤600V	≤ 700V	>1GΩ	5KA	100A	5A	15days	E505240
HA3R5-300SMD	300V±20%	≤800V	≤ 900V	>1GΩ	5KA	100A	5A	15days	E505240
HA3R5-350SMD	350V±20%	≤900V	≤ 1000V	>1GΩ	5KA	100A	5A	15days	E505240
HA3R5-400SMD	400V±20%	≤900V	≤ 1000V	>1GΩ	5KA	100A	5A	15days	E505240
HA3R5-420SMD	420V±20%	≤900V	≤ 1000V	>1GΩ	5KA	100A	5A	15days	E505240
HA3R5-470SMD	470V±20%	≤1100V	≤ 1200V	>1GΩ	5KA	100A	5A	15days	E505240
HA3R5-500SMD	500V±20%	≤1100V	≤ 1200V	>1GΩ	5KA	100A	5A	15days	E505240
HA3R5-550SMD	550V±20%	≤1300V	≤ 1400V	>1GΩ	5KA	100A	5A	15days	E505240
HA3R5-600SMD	600V±20%	≤1300V	≤1400V	>1GΩ	5KA	100A	5A	15days	E505240
HA3R5-800SMD	800V±20%	≤1500V	≤1600V	>1GΩ	5KA	100A	5A	15days	E505240

HUAAN 华兴安电子 HUAAN LIMITED

Φ5*7.6mm

3-Electrode Gas Discharge Tubes 5KA

1:At delivery AQL 0.65 leave Ⅱ Military Standard 105 E
2:In ionized mode
3:Test according to ITU-T Rec.k.12

Environmental resistance

Storage temperature:	-40℃---+90℃
Operating temperature:	-40℃---+90℃
Electrode:	Tin Plated

Example Part Number: HA3R5-90SMD

HA	=	**HUAAN**
3	=	**3 Electrode device**
R	=	**Gas Discharge Tube**
5	=	**5mm Diameter**
90	=	**90V**
SMD	=	**Surface-mount**

Tape Specification and Reel Dimensions

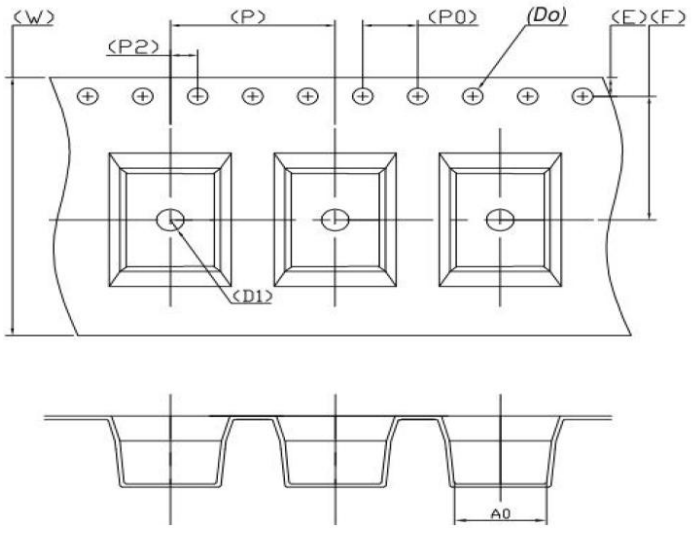

Symbol	Dimensions(mm)
W	**16.0mm ±0.3**
E	**1.75mm ±0.1**
F	**7.5mm ±0.1**
T	**0.50mm ±0.05**
P	**8.0mm ±0.1**
P0	**4.0mm ±0.1**
P2	**2.0mm ±0.1**
D0	**Φ1.5mm ±0.1**
A0	**5.40mm ±0.1**
K0	**5.70mm ±0.1**
B0	**5.4mm ±0.1**

Packaging Quantity

Part Number	Quantity	
	Per Reel	Per Carton
HA3R5-xxxSMD Series	**1000PCS**	**5000PCS**