Hall closed loop current sensor

Model：HA2009

Epoxy potting plug terminal, leading wire or PCB welding output.AC/DC motor, current and voltage detection, battery powered, charging current detection, welding machine, inverter, automatic elevator, crane, papermaking,printing presses, injection molding machine, elevator Mechanical and electrical equipment such as AC/DC current/voltage detection



Technical indicators:

Flame resistance：UL94-V0
Working temperature：-25～+70℃
Storage temperature：-40～+85℃
Bandwidth：DC～150kHz
Dielectric strength：3.5KV 50Hz 1min

Electrical parameters:

I_P	Rated input	±20	A
I_{PM}	Input measured range	±30	A
I_{OUT}	Rated output	±50	mA
X	Accuracy	0.5	%
ε_L	Linearity	＜0.2	%
V_C	Supply voltage(±5%)	±15	V
I_C	Current consumption	±10	mA+Im
R_L	Load impedance		Ω
I_{OE}	Zero offsetTA=25℃	≤±0.75	mA
T_R	Response time	＜1	μs
N.W	Weight	36	g

Connection Diagram:

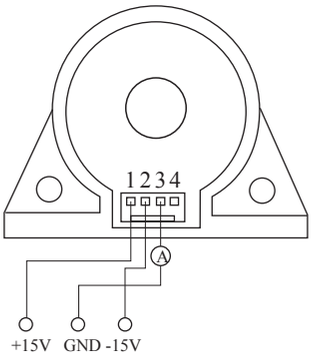

Terminal definition
1：+V
2：-V
3：M
4：N.C

connector schematic diagram:

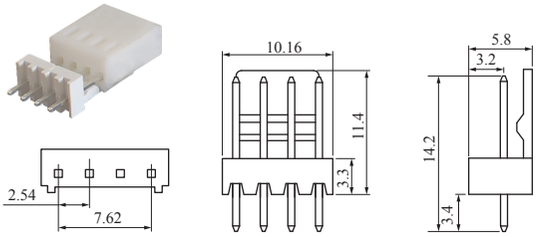

Cold-press terminal plug /socket,Distance 2.54，Stitch size 0.5×0.5

Dimensions（ in mm）:

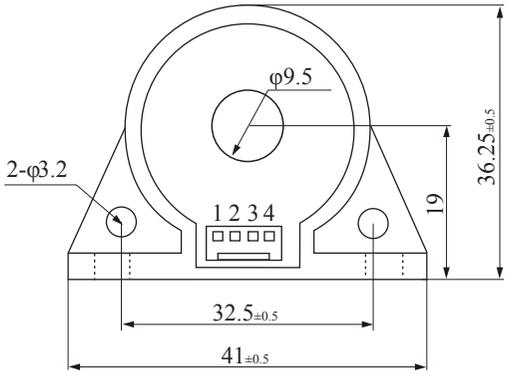

Front view

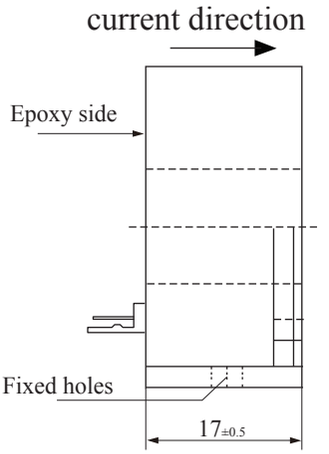

Side view