HA-2850/883

Low Power, High Slew Rate, Wideband Operational Amplifier

July 1994

Features

- **This Circuit is Processed in Accordance to MIL-STD-883 and is Fully Conformant Under the Provisions of Paragraph 1.2.1.**
- **Low Supply Current. . . . . 8.0mA (Max)**
- **Low Offset Voltage . . . . . .2.0mV (Max)**
- **High Slew Rate. . . . . 340V/μs (Typ)**
- **Open Loop Gain. . . . . 20kV/V (Min)**
- **Wide Gain-Bandwidth ($A_V \geq 10$) . . . . . 470MHz (Typ)**
- **Input Noise Voltage at 1kHz . . . . . 11nV/$\sqrt{Hz}$ (Typ)**
- **Lower Power Replacement for HA-2540/883, AD840**

Applications

- **Pulse and Video Amplifiers**
- **Wideband Amplifiers**
- **High Speed Sample-Hold Circuits**
- **Fast, Precise D/A Converters**

Description

The HA-2850/883 is a wideband, high slew rate, operational amplifier featuring superior speed and bandwidth characteristics. It also features trimmed supply current, which minimizes supply current (and thus AC parameter) variation over process and temperature extremes. For example, the I_{CC} variation over the entire military temperature range is typically less than 0.5mA. Bipolar construction, coupled with dielectric isolation, delivers outstanding performance in circuits with closed loop gains ≥10.

The 340V/μs slew rate, and 470MHz gain bandwidth product ensure high performance in video and wideband amplifier designs. Differential gain and phase are a low 0.04% and 0.04 degrees, respectively, making the HA-2850/883 ideal for video applications. A full ±10V output swing, high open loop gain, and outstanding AC parameters make the HA-2850/883 an excellent choice for data acquisition systems.

Ordering Information

PART NUMBER	TEMPERATURE RANGE	PACKAGE
HA1-2850/883	-55°C to +125°C	14 Lead CerDIP
HA7-2850/883	-55°C to +125°C	8 Lead CerDIP

Pinouts

HA-2850/883
(CERDIP)
TOP VIEW

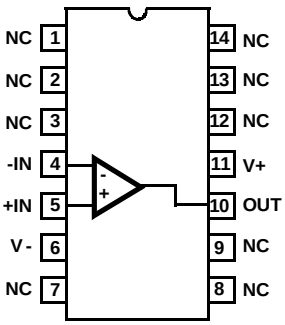

HA-2850/883
(CERDIP)
TOP VIEW

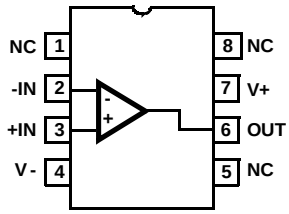

CAUTION: These devices are sensitive to electrostatic discharge; follow proper IC Handling Procedures.
1-888-INTERSIL or 321-724-7143 | Intersil (and design) is a trademark of Intersil Americas Inc.
Copyright © Intersil Americas Inc. 2002. All Rights Reserved

Spec Number **511095-883**
FN3595.1

Absolute Maximum Ratings

Voltage between V+ and V- Terminals 35V
Differential Input Voltage 6V
Voltage at Either Input Terminal . . . . . V+ to V-
Peak Output Current (≤10% Duty Cycle) 50mA
Junction Temperature (T_J) . . . . . +175°C
Storage Temperature Range . . . . . -65°C to +150°C
ESD Classification . . . . . <2000V
Lead Temperature (Soldering 10s) . . . . . +300°C

Thermal Information

Thermal Resistance	θ_{JA}	θ_{JC}
14 Lead CerDIP Package	81°C/W	26°C/W
8 Lead CerDIP Package	115°C/W	30°C/W

Package Power Dissipation Limit at +75°C for $T_J \leq +175°C$
14 Lead CerDIP Package 1.23W
8 Lead CerDIP Package 0.87W
Package Power Dissipation Derating Factor Above +75°C
14 Lead CerDIP Package . . . . . 12.3mW/°C
8 Lead CerDIP Package . . . . . 8.7mW/°C

CAUTION: Stresses above those listed in "Absolute Maximum Ratings" may cause permanent damage to the device. This is a stress only rating and operation of the device at these or any other conditions above those indicated in the operational sections of this specification is not implied.

Operating Conditions

Operating Temperature Range . . . . . -55°C to +125°C
Operating Supply Voltage . . . . . ±12V to ±15V

$V_{INCM} \leq 1/2$ (V+ - V-)
$R_L \geq 1k\Omega$

TABLE 1. DC ELECTRICAL PERFORMANCE CHARACTERISTICS

Device Tested at: V_{SUPPLY} = ±15V, R_{SOURCE} = 100Ω, R_{LOAD} = 100kΩ, V_{OUT} = 0V, Unless Otherwise Specified.

PARAMETERS	SYMBOL	CONDITIONS	GROUP A SUBGROUP	TEMPERATURE	LIMITS		UNITS
					MIN	MAX	
Input Offset Voltage	V_{IO}	V_{CM} = 0V	1	+25°C	-2	2	mV
			2, 3	+125°C, -55°C	-6	6	mV
Input Bias Current	$+I_B$	V_{CM} = 0V, $+R_S$ = 1.1kΩ $-R_S$ = 100Ω	1	+25°C	-14.5	14.5	µA
			2, 3	+125°C, -55°C	-20	20	µA
	$-I_B$	V_{CM} = 0V, $+R_S$ = 100Ω $-R_S$ = 1.1kΩ	1	+25°C	-14.5	14.5	µA
			2, 3	+125°C, -55°C	-20	20	µA
Input Offset Current	I_{IO}	V_{CM} = 0V, $+R_S$ = 1.1kΩ $-R_S$ = 1.1kΩ	1	+25°C	-4	4	µA
			2, 3	+125°C, -55°C	-8	8	µA
Common Mode Range	+CMR	V+ = 5V, V- = -25V	1	+25°C	10	-	V
			2, 3	+125°C, -55°C	10	-	V
	-CMR	V+ = 25V, V- = -5V	1	+25°C	-	-10	V
			2, 3	+125°C, -55°C	-	-10	V
Large Signal Voltage Gain	$+A_{VOL}$	V_{OUT} = 0V and +10V R_L = 1kΩ	4	+25°C	20	-	kV/V
			5, 6	+125°C, -55°C	10	-	kV/V
	$-A_{VOL}$	V_{OUT} = 0V and -10V R_L = 1kΩ	4	+25°C	20	-	kV/V
			5, 6	+125°C, -55°C	10	-	kV/V
Common Mode Rejection Ratio	+CMRR	ΔV_{CM} = 10V, V_{OUT} = -10V V+ = 5V, V- = -25V	1	+25°C	75	-	dB
			2,3	+125°C, -55°C	75	-	dB
	-CMRR	ΔV_{CM} = -10V, V_{OUT} = 10V V+ = 25V, V- = -5V	1	+25°C	75	-	dB
			2, 3	+125°C, -55°C	75	-	dB

TABLE 1. DC ELECTRICAL PERFORMANCE CHARACTERISTICS (Continued)

Device Tested at: V_{SUPPLY} = ±15V, R_{SOURCE} = 100Ω, R_{LOAD} = 100kΩ, V_{OUT} = 0V, Unless Otherwise Specified.

PARAMETERS	SYMBOL	CONDITIONS	GROUP A SUBGROUP	TEMPERATURE	LIMITS		UNITS
					MIN	MAX	
Output Voltage Swing	$+V_{OUT}$	R_L = 1kΩ	1	+25°C	10	-	V
			2, 3	+125°C, -55°C	10	-	V
	$-V_{OUT}$	R_L = 1kΩ	1	+25°C	-	-10	V
			2, 3	+125°C, -55°C	-	-10	V
Output Current	$+I_{OUT}$	V_{OUT} = 10V	1	+25°C	10	-	mA
			2, 3	+125°C, -55°C	10	-	mA
	$-I_{OUT}$	V_{OUT} = -10V	1	+25°C	-	-10	mA
			2, 3	+125°C, -55°C	-	-10	mA
Quiescent Power Supply Current	$+I_{CC}$	V_{OUT} = 0V, I_{OUT} = 0mA	1	+25°C	-	8	mA
			2, 3	+125°C, -55°C	-	8	mA
	$-I_{CC}$	V_{OUT} = 0V, I_{OUT} = 0mA	1	+25°C	-8	-	mA
			2, 3	+125°C, -55°C	-8	-	mA
Power Supply Rejection Ratio	+PSRR	ΔV_{SUP} = 10V V+ = 10V, V- = -15V V+ = 20V, V- = -15V	1	+25°C	75	-	dB
			2, 3	+125°C, -55°C	75	-	dB
	-PSRR	ΔV_{SUP} = 10V V+ = 15V, V- = -10V V+ = 15V, V- = -20V	1	+25°C	75	-	dB
			2, 3	+125°C, -55°C	75	-	dB

TABLE 2. AC ELECTRICAL PERFORMANCE CHARACTERISTICS

Table 2 Intentionally Left Blank. See A.C. Specifications in Table 3

TABLE 3. ELECTRICAL PERFORMANCE CHARACTERISTICS

Device Characterized at: V_{SUPPLY} = ± 15V, R_{SOURCE} = 50Ω, R_{LOAD} = 1kΩ, $C_L \leq 10pF$, A_V = +10V/V, Unless Otherwise Specified.

PARAMETERS	SYMBOL	CONDITIONS	NOTES	TEMPERATURE	LIMITS		UNITS
					MIN	MAX	
Gain Bandwidth Product	GBWP	V_O = 200mV, f_O = 5MHz	1	+25°C	400	-	MHz
		V_O = 200mV, f_O = 45MHz	1	+25°C	350	-	MHz
Slew Rate	+SR	V_O = -5V to +5V	1, 4	+25°C	300	-	V/µs
	-SR	V_O = +5V to -5V	1, 4	+25°C	300	-	V/µs
Full Power Bandwidth	FPBW	V_{PEAK} = 10V	1, 2	+25°C	4.8	-	MHz
Rise and Fall Time	T_R	V_O = 0V to +200mV	1, 4	+25°C	-	15	ns
	T_F	V_O = 0V to -200mV	1, 4	+25°C	-	15	ns
Minimum Closed Loop Stable Gain	CLSG	R_L = 1kΩ, $C_L \leq 10pF$	1	-55°C to +125°C	10	-	V/V
Overshoot	+OS	V_O = 0V to +200mV	1	+25°C	-	30	%
	-OS	V_O = 0V to -200mV	1	+25°C	-	30	%
Open Loop Output Resistance	R_{OUT}	V_{OUT} = 0V	1	+25°C	-	60	Ω
Quiescent Power Consumption	PC	V_{OUT} = 0V, I_{OUT} = 0mA	1, 3	-55°C to +125°C	-	240	mW

NOTES:

1. Parameters listed in Table 3 are controlled via design or process parameters and are not directly tested at final production. These parameters are lab characterized upon initial design release, or upon design changes. These parameters are guaranteed by characterization based upon data from multiple production runs which reflect lot to lot and within lot variation.
2. Full Power Bandwidth guarantee based on Slew Rate measurement using FPBW = Slew Rate/($2\pi V_{PEAK}$).
3. Quiescent Power Consumption based upon Quiescent Supply Current test maximum. (No load on outputs.)
4. Measured between 10% and 90% points.

TABLE 4. ELECTRICAL TEST REQUIREMENTS

MIL-STD-883 TEST REQUIREMENTS	SUBGROUPS (SEE TABLE 1)
Interim Electrical Parameters (Pre Burn-In)	1
Final Electrical Test Parameters	1 (Note 1), 2, 3, 4, 5, 6
Group A Test Requirements	1, 2, 3, 4, 5, 6
Groups C and D Endpoints	1

NOTE:

1. PDA applies to Subgroup 1 only.

Die Characteristics

DIE DIMENSIONS:
65 x 52 x 19 mils ± 1 mils
1650 x 1310 x 483µm ± 25.4µm

METALLIZATION:
Type: Al, 1% Cu
Thickness: 16kÅ ± 2kÅ

GLASSIVATION:
Type: Nitride over Silox
Silox Thickness: 12kÅ ± 2kÅ
Nitride Thickness: 3.5kÅ ± 1.5kÅ

WORST CASE CURRENT DENSITY:
0.7 x 10^5 A/cm^2 at 1.8mA

SUBSTRATE POTENTIAL (Powered Up): V-

TRANSISTOR COUNT: 34

PROCESS: Bipolar Dielectric Isolation

Metallization Mask Layout

HA-2850/883

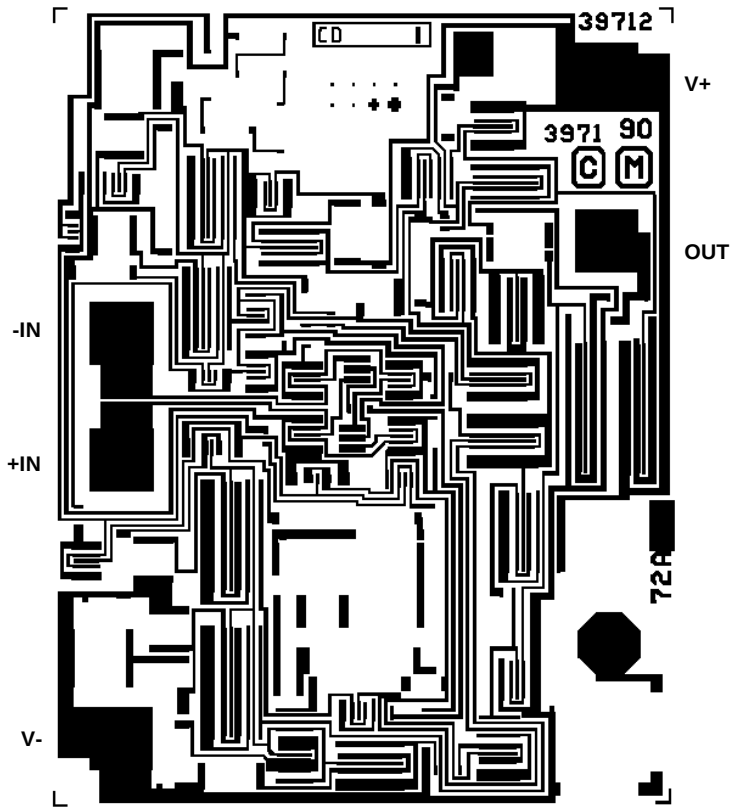

Test Circuit (Applies to Table 1)

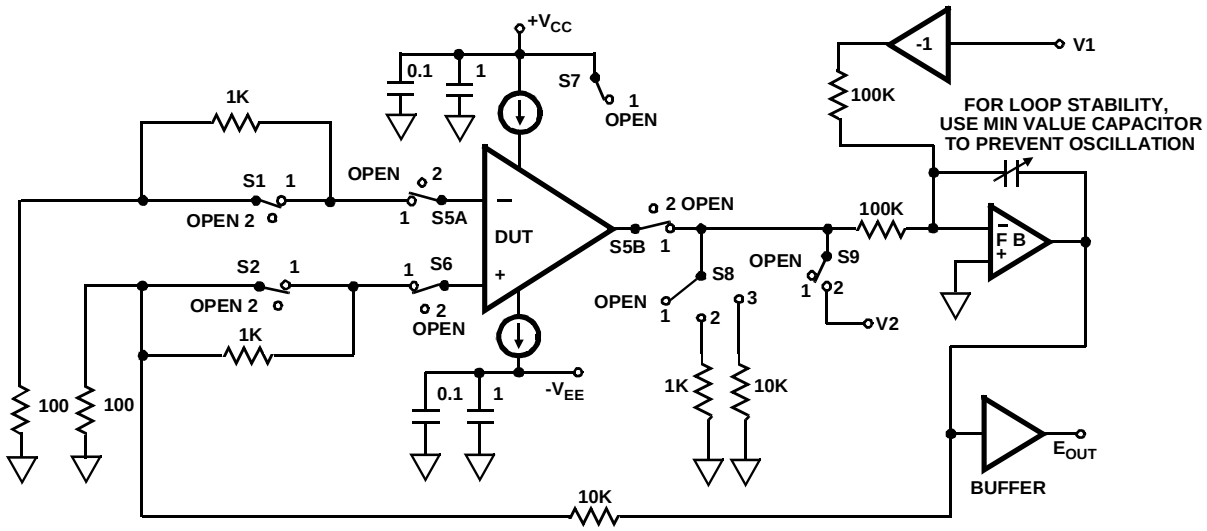

Test Waveforms

SIMPLIFIED TEST CIRCUIT FOR LARGE AND SMALL SIGNAL RESPONSE (APPLIES TO TABLE 3)

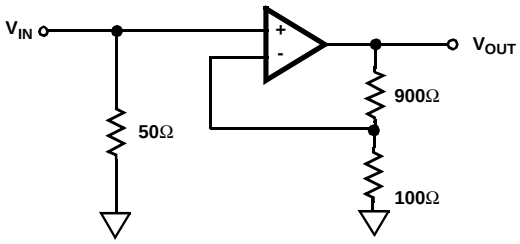

NOTES:

1. $V_S = \pm 15V$
2. $A_V = +10$
3. $C_L \leq 10pF$

MEASURED LARGE SIGNAL RESPONSE

Vertical Scale: Input = 1V/Div., Output = 5V/Div.
Horizontal Scale: 50ns /Div.

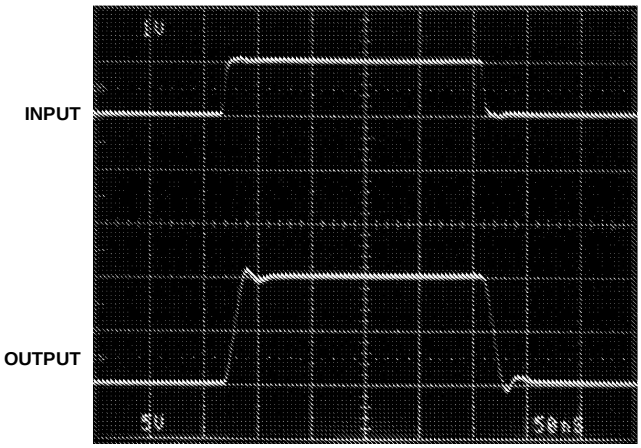

MEASURED SMALL SIGNAL RESPONSE

Vertical Scale: Input = 10mV/Div., Output=100mV/Div.
Horizontal Scale: 50ns/Div.

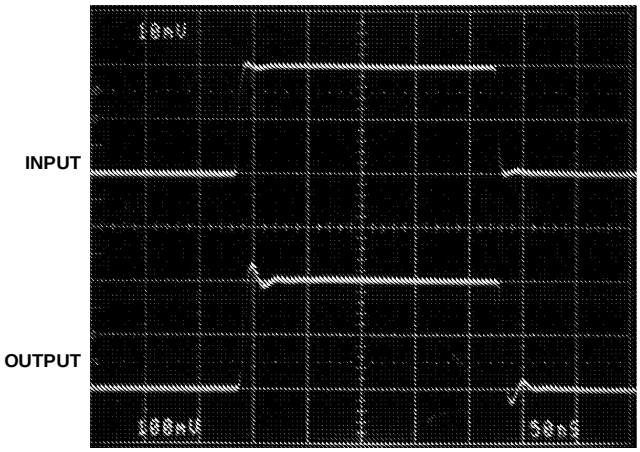

Burn-In Circuits

HA1-2850/883 CERAMIC DIP

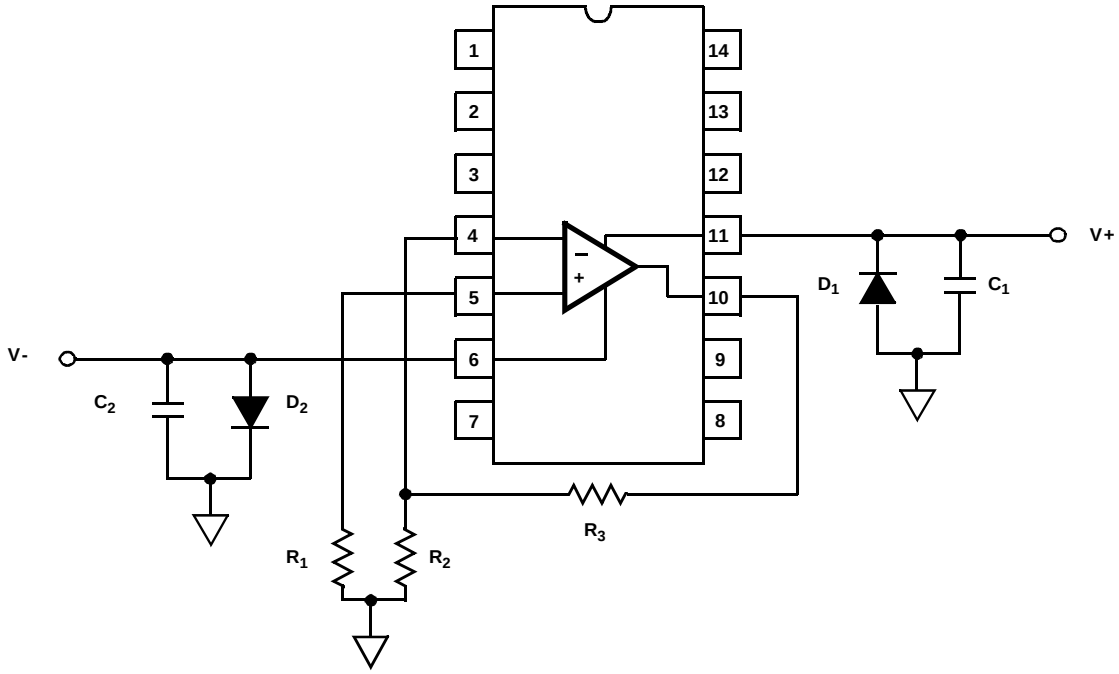

HA7-2850/883 CERAMIC DIP

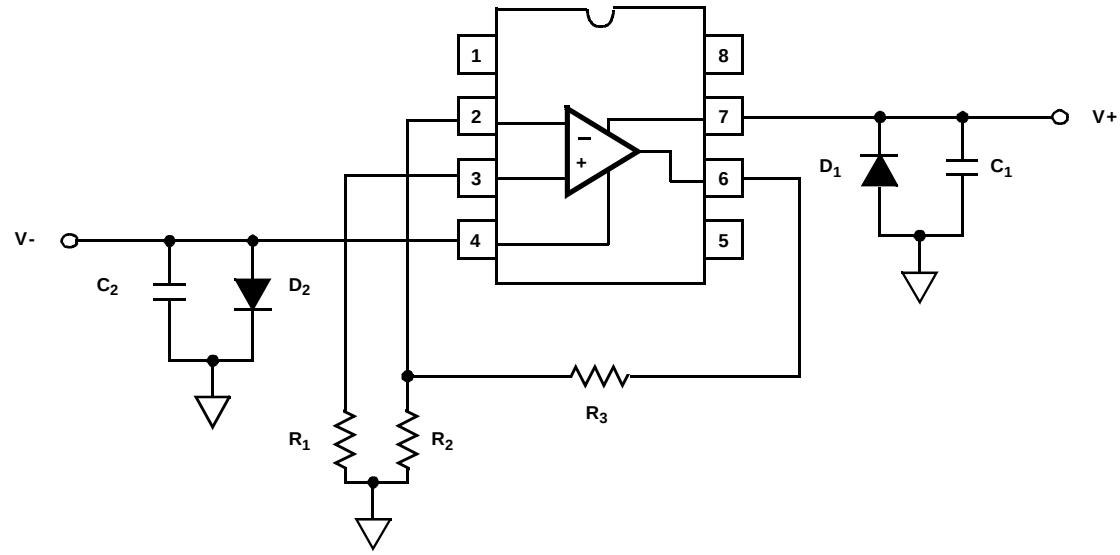

NOTES:

1. R_1 = 1kΩ, ±5%, 1/4W (Min)
2. R_2 = 1kΩ, ±5%, 1/4W (Min)
3. R_3 = 10kΩ, ±5%, 1/4W (Min)
4. $C_1 = C_2$ = 0.01µF/Socket (Min) or 0.1µF/Row, (Min)
5. $D_1 = D_2$ = 1N4002 or Equivalent/Board
6. |(V+) - (V-)| = 31V ± 1V

Schematic Diagram

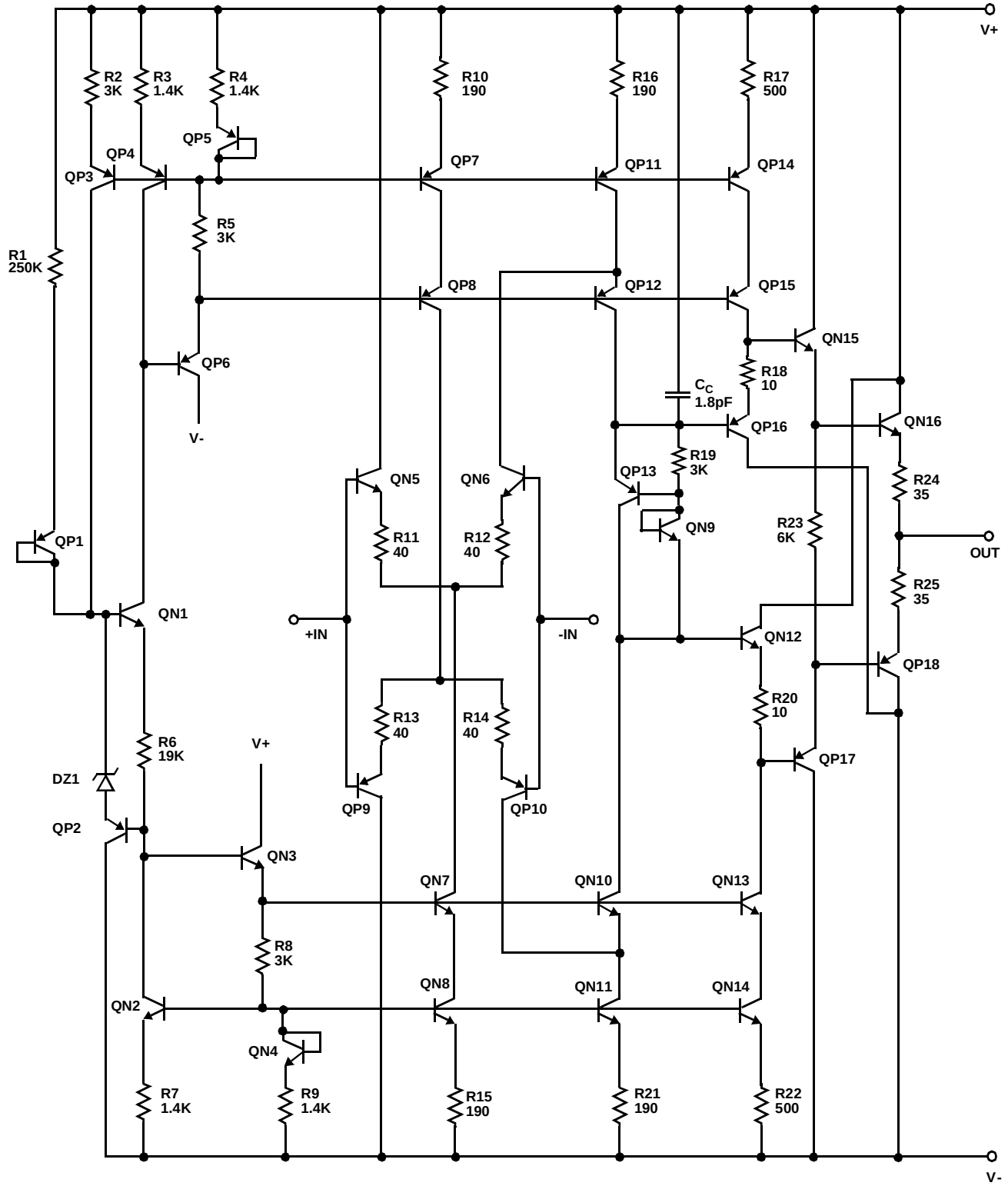

The information contained in this section has been developed through characterization by Intersil Corporation and is for use as application and design information only. No guarantee is implied.

Typical Performance Curves $V_{SUPPLY} = \pm15V$, $A_V = +10$, $R_L = 1k\Omega$, $C_L \leq 10pF$, $T_A = +25^oC$, Unless Otherwise Specified

FREQUENCY RESPONSE FOR VARIOUS GAINS

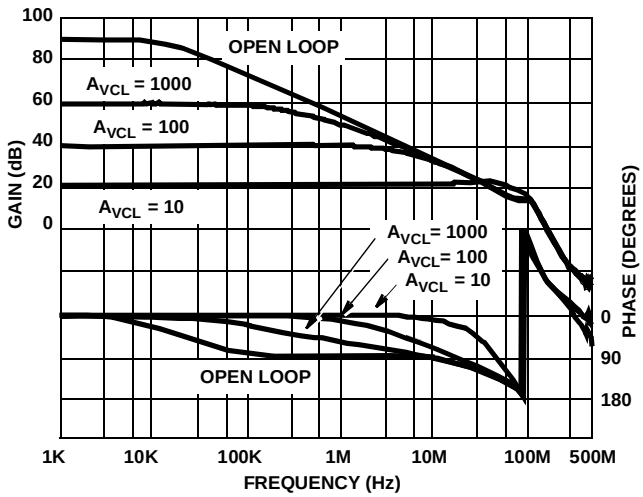

GAIN BANDWIDTH PRODUCT vs SUPPLY VOLTAGE

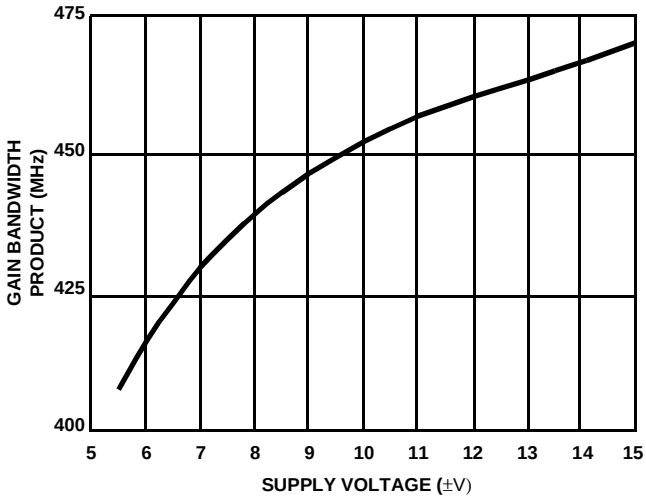

GAIN BANDWIDTH PRODUCT vs TEMPERATURE

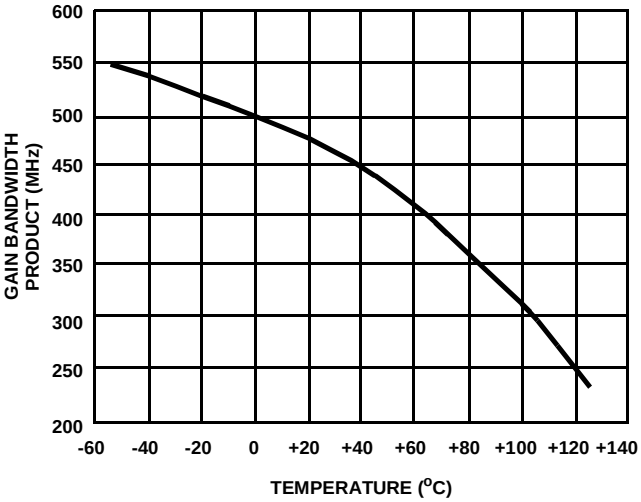

CMRR vs FREQUENCY

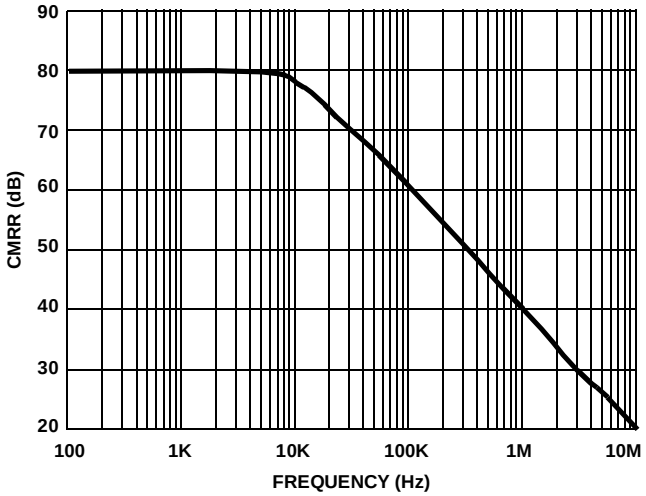

DESIGN INFORMATION (Continued)

The information contained in this section has been developed through characterization by Intersil Corporation and is for use as application and design information only. No guarantee is implied.

Typical Performance Curves $V_{SUPPLY} = \pm15V$, $A_V = +10$, $R_L = 1k\Omega$, $C_L \leq 10pF$, $T_A = +25^oC$, Unless Otherwise Specified (Continued)

PSRR vs FREQUENCY

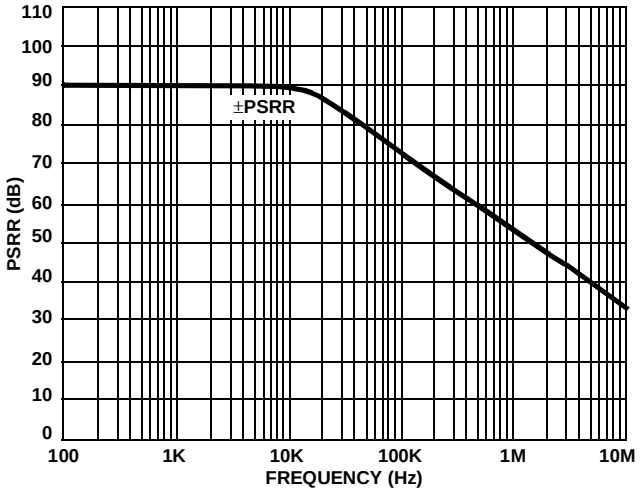

INPUT NOISE vs FREQUENCY

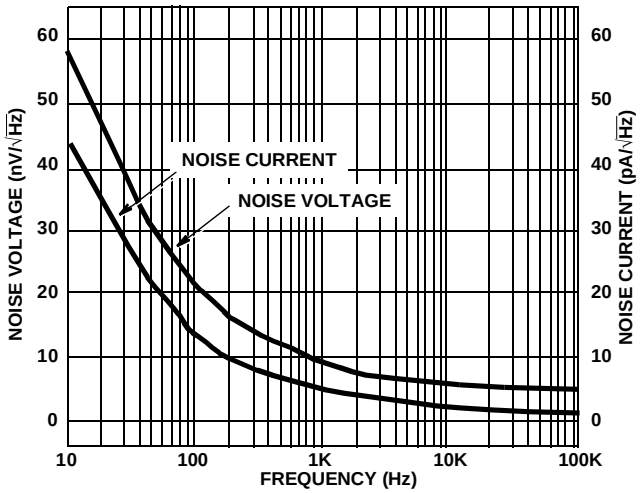

SLEW RATE vs TEMPERATURE

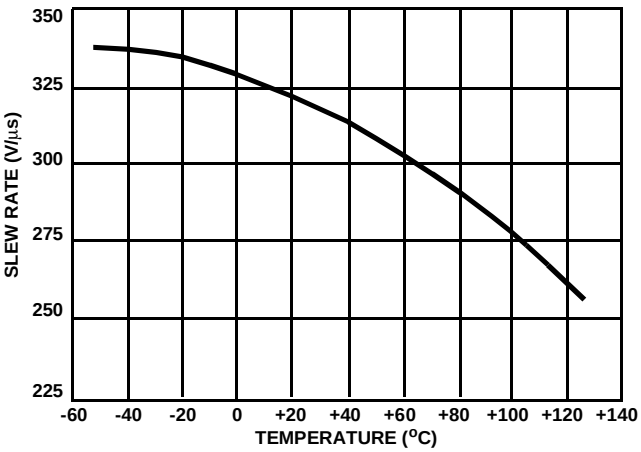

SLEW RATE vs SUPPLY VOLTAGE

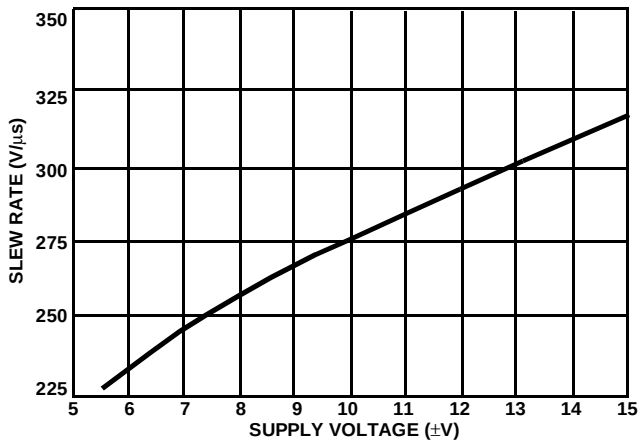

DESIGN INFORMATION (Continued)

The information contained in this section has been developed through characterization by Intersil Corporation and is for use as application and design information only. No guarantee is implied.

Typical Performance Curves $V_{SUPPLY} = \pm15V$, $A_V = +10$, $R_L = 1k\Omega$, $C_L \leq 10pF$, $T_A = +25^oC$, Unless Otherwise Specified (Continued)

INPUT OFFSET VOLTAGE AND INPUT BIAS CURRENT vs TEMPERATURE

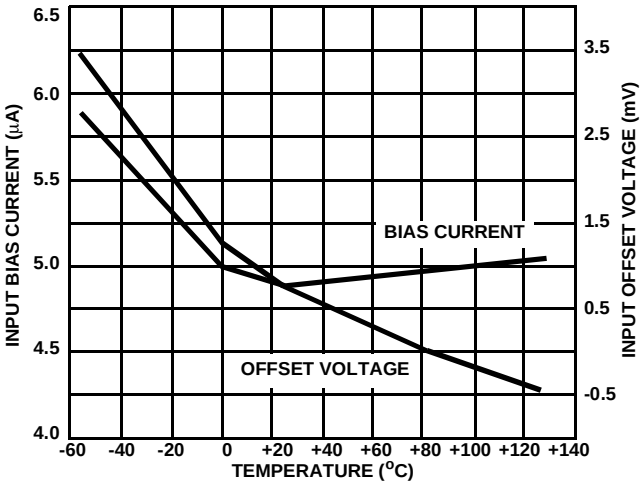

SUPPLY CURRENT vs SUPPLY VOLTAGE

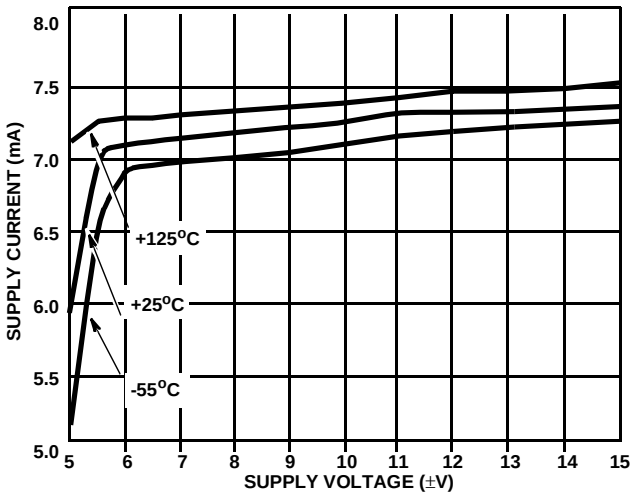

POSITIVE OUTPUT SWING vs TEMPERATURE

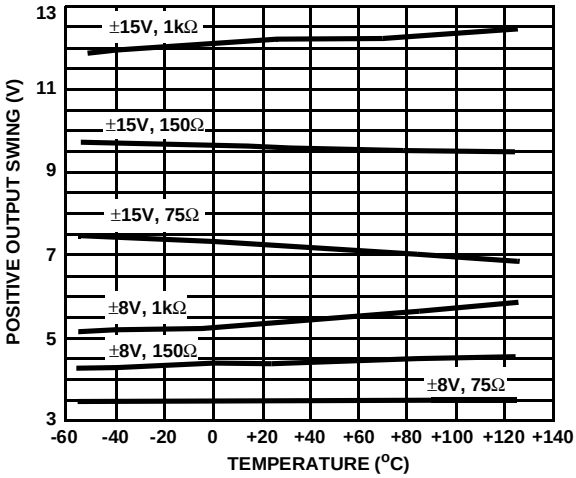

NEGATIVE OUTPUT SWING vs TEMPERATURE

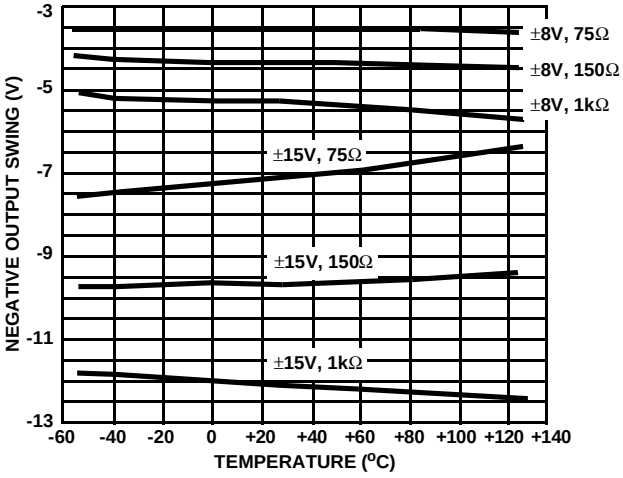

MAXIMUM UNDISTORTED OUTPUT SWING vs FREQUENCY

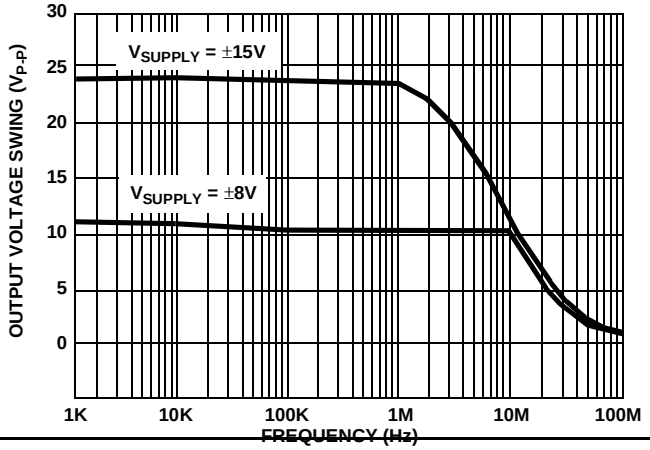

TOTAL HARMONIC DISTORTION vs FREQUENCY

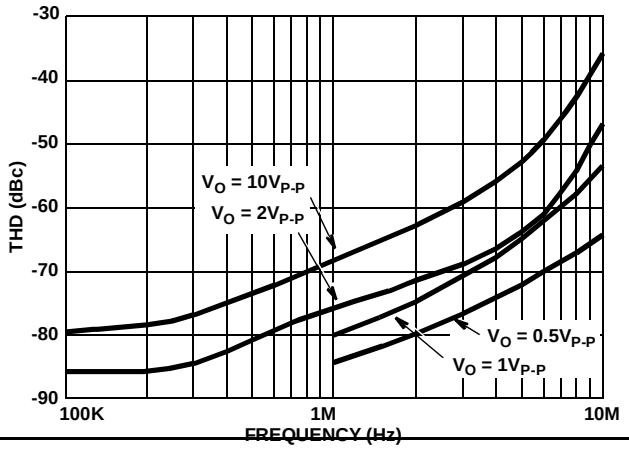

TYPICAL PERFORMANCE CHARACTERISTICS

Device Characterized at: $V_{SUPPLY} = \pm 15V$, $R_L = 1k\Omega$, $C_L \leq 10pF$, Unless Otherwise Specified

PARAMETERS	CONDITIONS	TEMPERATURE	TYPICAL	UNITS
Input Offset Voltage	$V_{CM} = 0V$	$+25^oC$	0.6	mV
		Full	2.0	mV
Average Offset Voltage Drift	Versus Temperature	Full	20	$\mu V/^oC$
Input Bias Current	$V_{CM} = 0V$	$+25^oC$	5.0	μA
		Full	8.0	μA
Input Offset Current	$V_{CM} = 0V$	$+25^oC$	1.0	μA
Differential Input Resistance		$+25^oC$	10	$k\Omega$
Input Noise Voltage Density	$f_O = 1000Hz$	$+25^oC$	11	$nV/\sqrt{Hz}$
Input Noise Current Density	$f_O = 1000Hz$	$+25^oC$	6.0	$pA/\sqrt{Hz}$
Large Signal Voltage Gain	$V_{OUT} = \pm 10V$	$+25^oC$	25	kV/V
		Full	20	kV/V
CMRR	$V_{CM} = \pm 10V$	Full	80	dB
Gain Bandwidth Product		$+25^oC$	470	MHz
Output Voltage Swing	$R_L = 1k\Omega$	Full	± 11	V
Output Current	$V_{OUT} \geq 10V$	Full	± 20	mA
Output Resistance	Open Loop	$+25^oC$	30	Ω
Full Power Bandwidth	$FPBW = SR/2\pi V_P$, $V_P = 10V$	$+25^oC$	5.4	MHz
Slew Rate	$V_{OUT} = \pm 10V$, $A_V = +10$	$+25^oC$	340	$V/\mu s$
Rise and Fall Time	$V_{OUT} = \pm 100mV$, $A_V = +10$	$+25^oC$	5	ns
Overshoot	$V_{OUT} = \pm 100mV$, $A_V = +10$	$+25^oC$	25	%
PSRR	Delta $V_S = \pm 10V$ to $\pm 20V$	Full	90	dB
Supply Current	No Load	Full	7.5	mA
Differential Gain	$A_V = +10$, NTSC	$+25^oC$	0.04	%
Differential Phase	$A_V = +10$, NTSC	$+25^oC$	0.04	Degrees
Harmonic Distortion	$A_V = +10$, f = 1MHz, $V_{OUT} = 2V_{P-P}$	$+25^oC$	-74	dBc

All Intersil U.S. products are manufactured, assembled and tested utilizing ISO9000 quality systems.
Intersil Corporation's quality certifications can be viewed at www.intersil.com/design/quality

Intersil products are sold by description only. Intersil Corporation reserves the right to make changes in circuit design, software and/or specifications at any time without notice. Accordingly, the reader is cautioned to verify that data sheets are current before placing orders. Information furnished by Intersil is believed to be accurate and reliable. However, no responsibility is assumed by Intersil or its subsidiaries for its use; nor for any infringements of patents or other rights of third parties which may result from its use. No license is granted by implication or otherwise under any patent or patent rights of Intersil or its subsidiaries.

For information regarding Intersil Corporation and its products, see www.intersil.com