H 7908

3-TERMINAL 1A NEGATIVE VOLTAGE REGULATORS

The H7908 series of three terminal negative regulators are available in the TO-220 package and with several fixed output voltages, making them useful in a wide range of applications. Each type employs internal current limiting, Thermal shut down and safe area protection, making it essentially indestructible.

Features

- Output current in Excess of 1A
- Output Voltages of -8V、
- lntemal Thermal Overload Protection
- Short Circuit Protection
- Output Transistor Safe-Area Compensation

TO-220



1—GND
2—INPUT
3—OUTPUT

Absolute Maximum Ratings（T_a=25℃）

V_I——Input Voltage…… -35V

$R_{\theta JC}$——Thermal Resistance Junction-Cases…… 5℃/W

$R_{\theta JA}$——Thermal Resistance Junction-Air…… 65℃/W

T_{OPR}——Operating Temperature Range…… 0~125℃

T_{STG}——Storage Temperature Range…… -65~150℃

BLOCK DIAGRAM

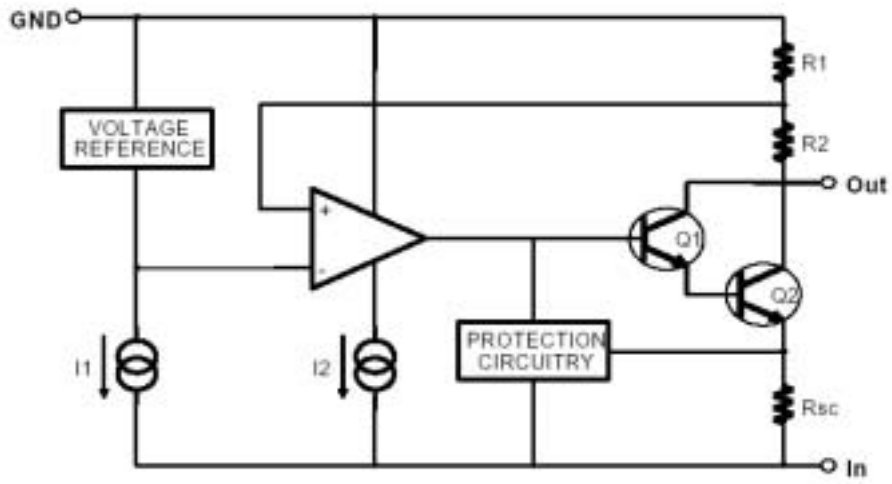

(unless otherwise specified, 0℃≤T_J≤125℃, I_O=500mA, V_I=14V, C_I=2.2μF, C_O=1μF)

Symbol	Parameter	Min.	Typ.	Max.	Unit	Conditions
V_O	Output Voltage	-7.7	-8.0	-8.3	V	T_J=25℃
		-7.6	-8.0	-8.4		I_O=5.0mA to 1.0A, P_O≤15W, V_I=-11.5V to -23V
ΔV_O	Line Regulation (Note1)		10	100	mV	T_J=25℃, V_I=-10.5V to -25V
			5	80		T_J=25℃, V_I=-11V to -17V
ΔV_O	Load Regulation (Note1)		12	160	mV	T_J=25℃, I_O=5.0mA to 1.5A
			4	80		T_J=25℃, I_O=250mA to 750mA
I_Q	Quiescent Current		3	6	mA	T_J=25℃
ΔI_Q	Quiescent Current Change		0.05	0.5	mA	I_O=5mA to 1.0A
			0.1	1.0		V_I=-11.5V to -25V
$\Delta V_O/\Delta T$	Output Voltage Drift		-0.6		mV/℃	I_O=5mA
V_N	Output Noise Voltage		175		μV	T_A=25℃, f=10Hz to 100kHz
RR	Ripple Rejection	54	60		dB	f=120Hz, △V_I =10V
V_D	Dropout Voltage		2		V	T_J=25℃, I_O=1A,
I_{SC}	Short Circuit Current		300		mA	T_J=25℃, V_I=-35V,
I_{PK}	Peak Current		2.2		A	T_J=25℃

Fig.1 Output Voltage

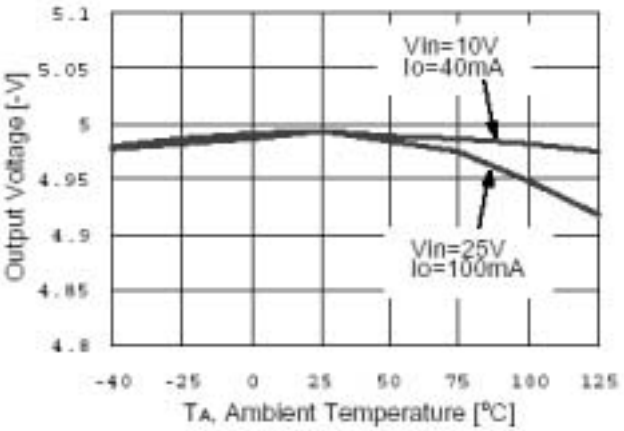

Fig. 2 Load Regulation

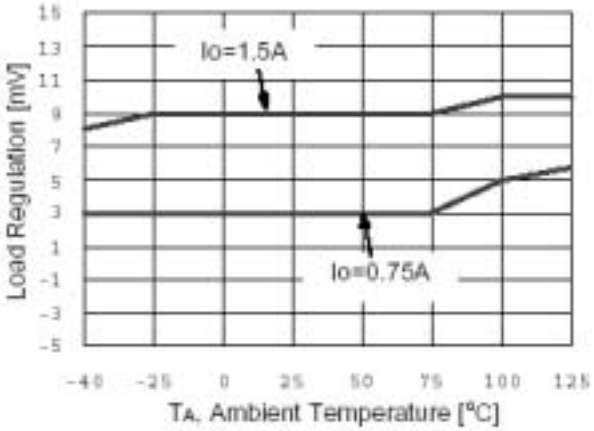

Fig.3 Quiescent Current

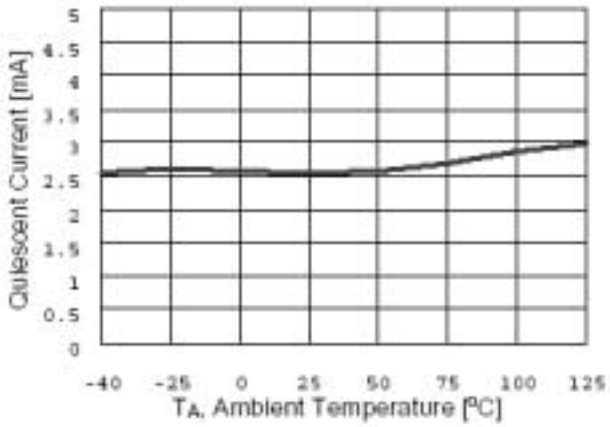

Fig. 4 Dropout Voltage

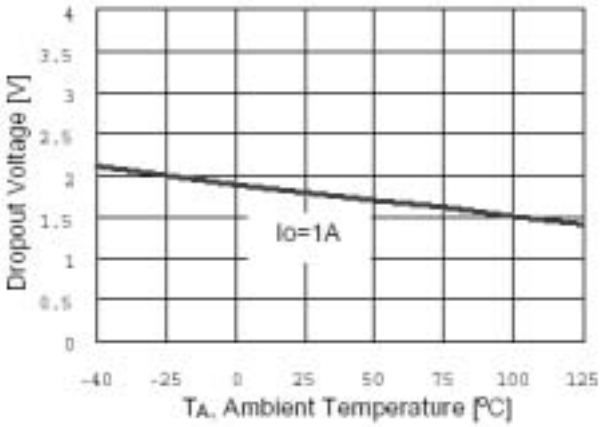

Fig.5 Short Circuit Current

