3-Electrode Gas Discharge Tubes 10KA

1：Dimension(mm)

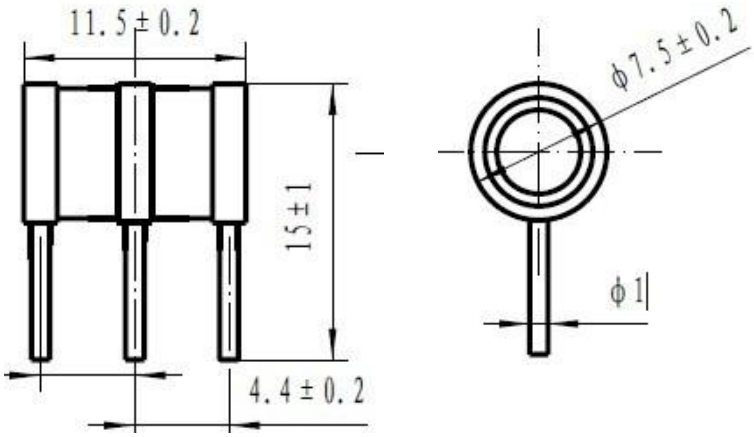



2:Main Applications

- •PCI Cards protection
- •Telephone/Fax/Modem protection
- •single line protection
- •ADSL/XDSL Splitter,Power Supply
- •Surge Protection Device/Surge Protector

- •100% Lead-Free(RoHs Compliant)
- •Non-Radioactive
- •Low capacitance (≤1pF)
- •Fast Response-time,High Insulation Resistance.
- •Small size :**Ø7.5x11.5**(mm)

4 Electrical Characteristics

Part Number	DC Spark-over Voltage @ 100V/S	Impulse Spark-over Voltage @100V/μs	Impulse Spark-over Voltage @1KV/μs	Insulation Resistance	Impulse discharge current(8/20μs)	AC discharge current (50Hz,1s,10times)	Capacitance (1MHz)
	V	V	V	GΩ	10 Times	A	PF
H3R7-75	75±20%	<500	<600	>1	10KA	10	≤1
H3R7-90	90±20%	<500	<600	>1	10KA	10	≤1
H3R7-150	150±20%	<500	<600	>1	10KA	10	≤1
H3R7-230	230±20%	<600	<700	>1	10KA	10	≤1
H3R7-250	250±20%	<600	<700	>1	10KA	10	≤1
H3R7-350	350±20%	<900	≤ 1000	>1	10KA	10	≤1
H3R7-400	400±20%	<900	≤ 1000	>1	10KA	10	≤1
H3R7-420	420±20%	<900	≤ 1000	>1	10KA	10	≤1
H3R7-470	470±20%	<1100	≤ 1200	>1	10KA	10	≤1
H3R7-600	600±20%	<1200	≤ 1300	>1	10KA	10	≤1

Specifications are subject to change without notice sales@huaandz.com

5 Electrical Characteristics continued



Part Number	DC Spark-over Voltage @ 100V/S	Impulse Spark-over Voltage @100V/μs	Impulse Spark-over Voltage @1KV/μs	Insulation Resistance	Impulse discharge current(8/20μs)	AC discharge current (50Hz,1s,10times)	Capacitance (1MHz)
	V	V	V	GΩ	10 Times	A	PF
H3R7-75F	75±20%	<500	<600	>1	10KA	10	≤1
H3R7-90F	90±20%	<500	<600	>1	10KA	10	≤1
H3R7-150F	150±20%	<500	<600	>1	10KA	10	≤1
H3R7-230F	230±20%	<600	<700	>1	10KA	10	≤1
H3R7-250F	250±20%	<600	<700	>1	10KA	10	≤1
H3R7-350F	350±20%	<900	≤ 1000	>1	10KA	10	≤1
H3R7-400F	400±20%	<900	≤ 1000	>1	10KA	10	≤1
H3R7-420F	420±20%	<900	≤ 1000	>1	10KA	10	≤1
H3R7-470F	470±20%	<1100	≤ 1200	>1	10KA	10	≤1
H3R7-600F	600±20%	<1200	≤ 1300	>1	10KA	10	≤1

Packing Quantity : 100PCS

Specifications are subject to change without notice sales@huaandz.com