PHASE CONTROL THYRISTOR H30TB/TLXX

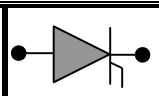

Symbol	Characteristics	Conditions	T_J (^{0}C)	Value	Unit
BLOCKING PARAMETERS					
V_{RRM}	Repetitive peak reverse voltage		125	200-1600	V
V_{DRM}	Repetitive peak off-stage voltage		125	200-1600	V
I_{RRM}	Repetitive peak reverse current	$V = V_{RRM}$	125	15	mA
I_{DRM}	Repetitive peak off-state current	$V = V_{RRM}$	125	15	mA
d_V/d_T	Rep. rate of change of voltage	@ 67%V_{DRM}	125	600	V/μS
CONDUCTING PARAMETERS					
$I_{F(AV)}$	Average on-state current	180 sine, 50H_Z, $T_C = 85^0$C		30	A
I_{RMS}	RMS on-state current			50	A
I_{TSM}	Surge on-state current	Sine wave, 10mS without reverse voltage	125	500	A
I^2t	I^2t			1250	A^2S
V_T	Peak on-state voltage drop	On-state current = 100A	125	1.72	V
V_0	Threshold voltage		125	0.95	V
r_0	On-state slope resistance		125	6.40	mΩ
di/dt	Repetitive rate of rise of current	d_{IG}/d_T = 1A/μS V_{GK} = 1V	125	100	A/μS
TRIGGERING PARAMETERS					
I_{GT}	Gate trigger current	V_D = 5V	25	100	mA
V_{GT}	Gate trigger voltage		25	2.50	V
I_L	Latching Current	V_D = 5V	25	300	mA
I_H	Holding Current	V_D = 5V	25	200	mA
$P_{G\ -PEAK}$	Maximum Peak Gate Power	Pulse width 100μSec		30	W
V_{FGM}	Maximum forward gate voltage			12	V
I_{FGM}	Maximum forward gate current			10	A
THERMAL & MECHANICAL PARAMETERS					
$R_{TH\ (J-C)}$	Thermal impedance, 180 conduction, Sine	Junction to case		0.93	^{0}C/W
$R_{TH\ (C-HK)}$	Thermal impedance	Case to heatsink		0.30	^{0}C/W
T_J	Maximum Permissible junction temperature			125	^{0}C
T_{STG}	Storage temperature range			-40 - 125	^{0}C
F	Mounting Torque			2	NM
W	Weight	For TB For TL		30 15	gms

H30TLXX

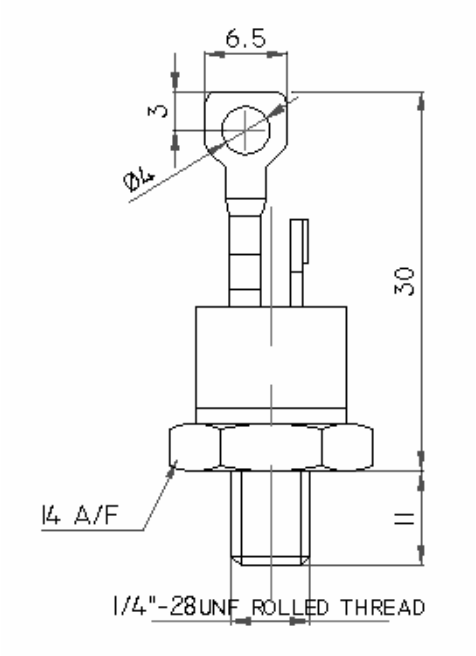

H30TBXX

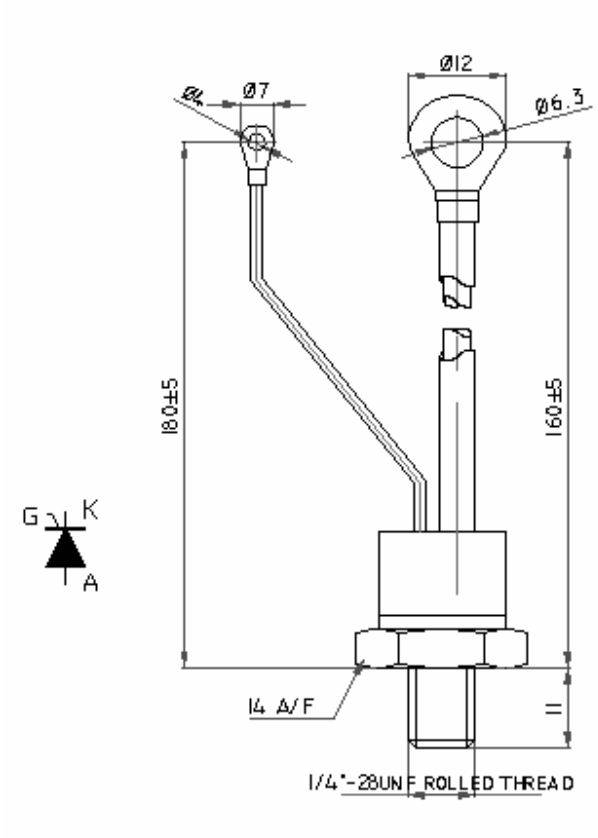

All dimensions in mm

On State Power Loss

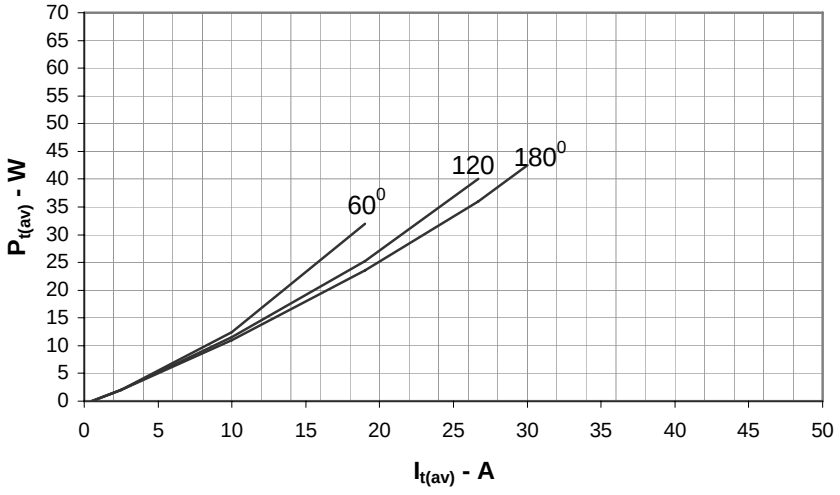

Maximum Permissible Case Temp

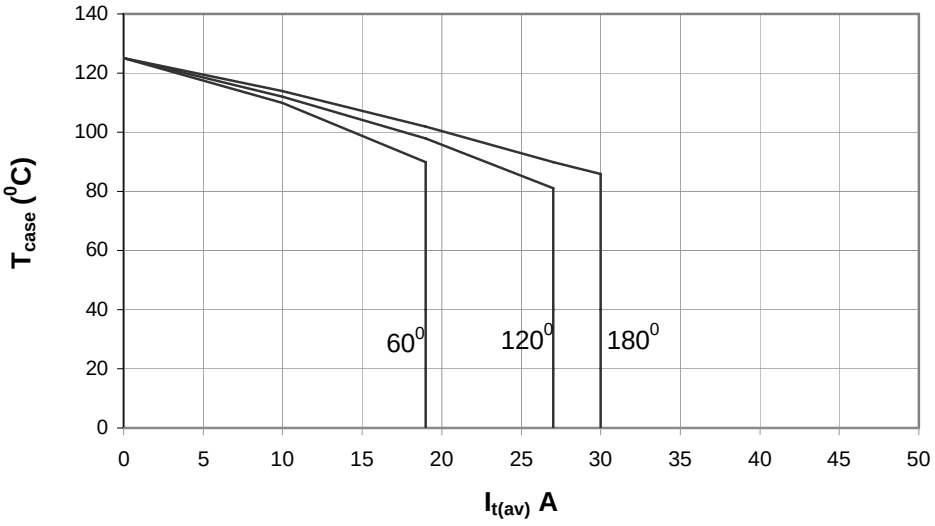

Max non repetitive Surge Current

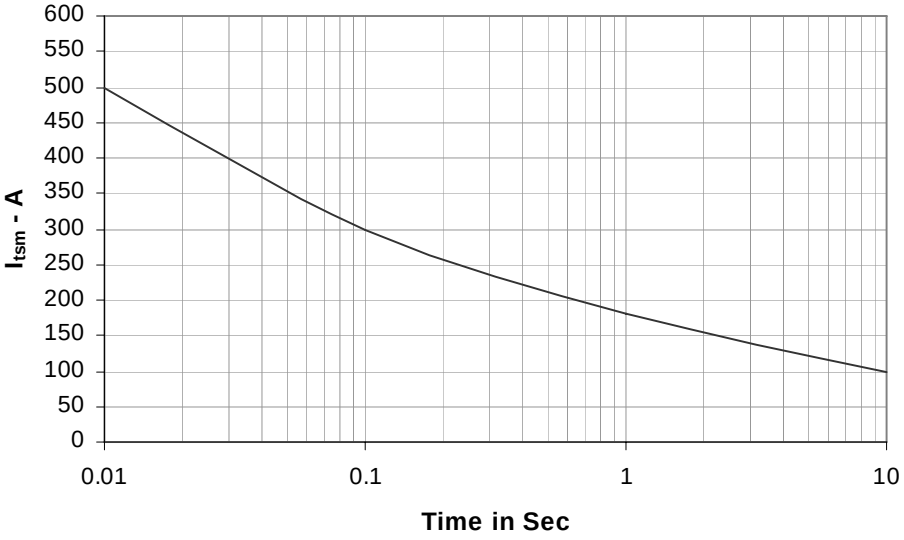

Transient Thermal Impedance Junction to Case

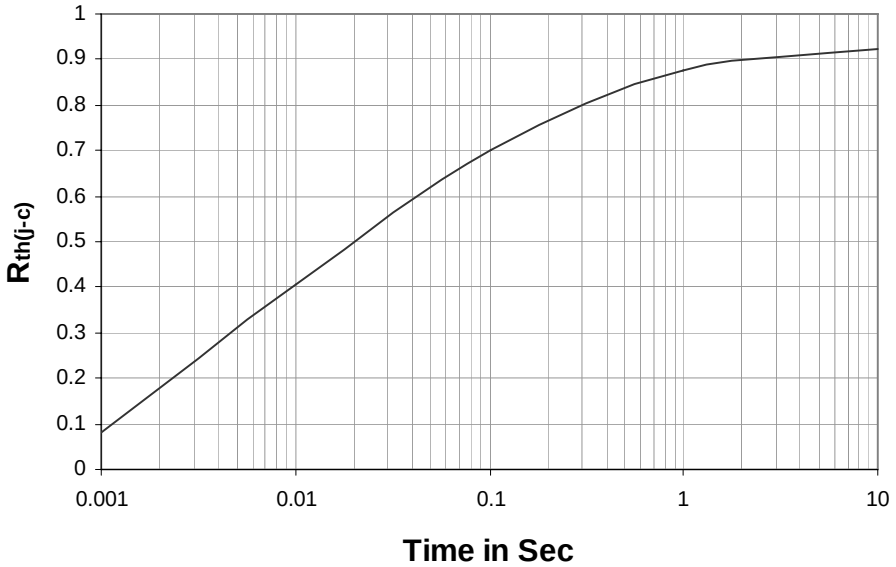

On State Characteristics

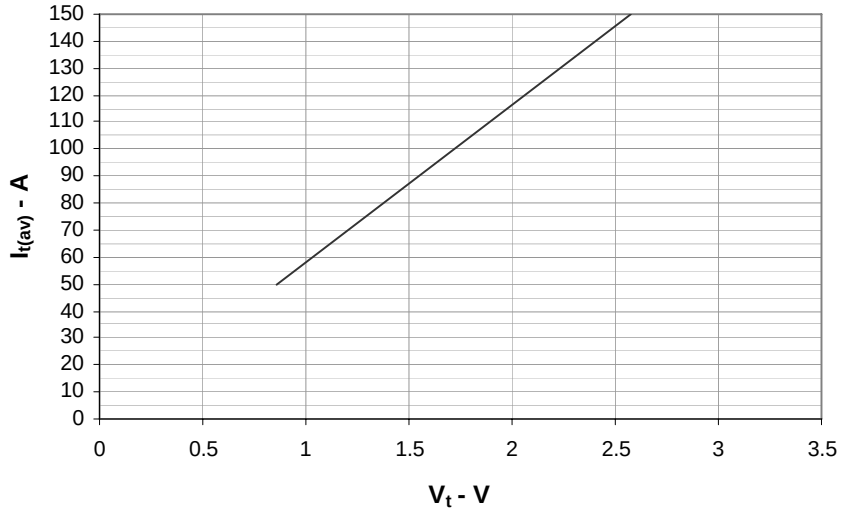

Gate Trigger Characteristics

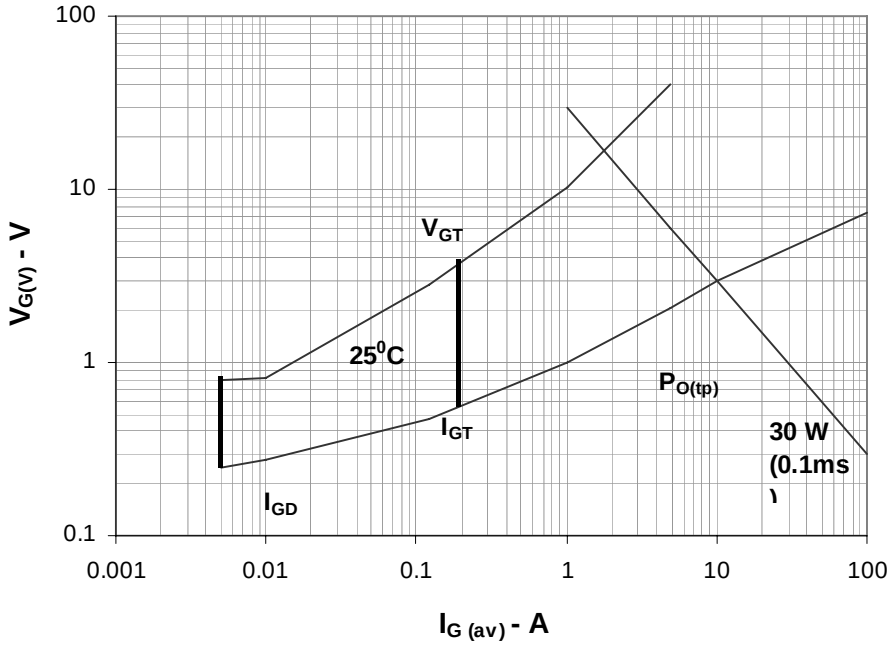

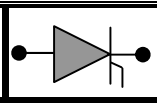

Ordering Information: -

H	30	TB / TL	XX
Hirect make Thyristor	$I_{F(AV)}$ = 30A	TB – with a Pigtail TL – with Lug	V_{RRM} = XX x 100 e.g.12 * 100 =1200V

Hind Rectifiers Ltd reserves the right to change the specifications without notice.

This datasheet specifies technical information for semiconductor devices but promises no characteristics. No warranty or guarantee expressed or implied is made regarding delivery, performance or suitability.

Hind Rectifiers Ltd
Lake Road
Bhandup (West)
Mumbai – 400 078
Tel: - +91 22 2596 8027/28/29/31
Fax: - +91 22 2596 4114
E-mail: - marketing@hirect.com
Website: - www.hirect.com

June-2008