H15

PCB fuse holders for 5 mm x 20 mm fuses



Product features

- For 5 mm x 20 mm fuses
- Fuse carriers are interchangeable
- Vertical (-V) or horizontal (-H) mounting
- Fuse carrier and knob are spring loaded bayonet type with screwdriver slot
- Solderability in accordance with IEC 68-2-20
- Shock safety of PC2
- High temperature thermoplastic meets:
  - UL 94V0
  - Glow wire test: 960°C per IEC 695-2-1

Agency information

- cURs Recognition file number: E14853 Guide IZLT2/IZLT8
- VDE file 40039714

Ordering

- Specify packaging prefix, part number, and option code as shown

Packaging prefix	Part number	Option code
BK-	H15-V-1	B

Packaging prefixes

- BK- (Bulk, 200 parts per box--100 parts per box if using option code B or K)
- BK1- (Bulk, 1000 parts per box)

Option code

- Blank (Fuse holder body and knob set)
- B- (Fuse holder body)
- K- (Fuse holder knob)

Dimensions (mm)

Drawing Not to Scale

H15-V-1

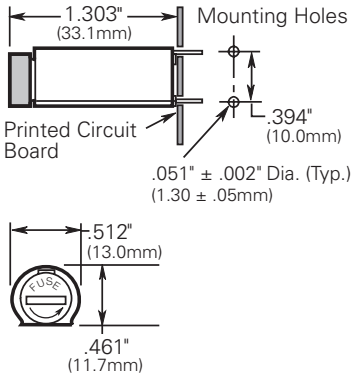

H15-H-1

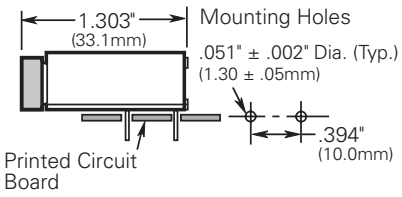

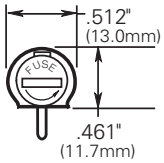

Component Material	
Clip	Tin plated
Terminals	Copper, Tin plated
Body	Thermoplastic

Product specifications

					Agency information/current rating	
Part Number[1]	**Orientation/ Mounting**	**Voltage rating Vac**	**Ambient temperature**	**Temperature rise**	**VDE**	**cURus**
H15-V-1	Vertical	250	24 °C	41 °C	10 A	10 A
H15-H-1	Horizontal	250	24 °C	41 °C	6.3 A	10 A

1. Part number definition H15-x-1
   H15= Product code and size
   x= V (Vertical), H (Horizontal)
   1= Threaded cap/carrier

Soldering Method
Wave immersion: 260 °C, 10 seconds maximum

Life Support Policy: Eaton does not authorize the use of any of its products for use in life support devices or systems without the express written approval of an officer of the Company. Life support systems are devices which support or sustain life, and whose failure to perform, when properly used in accordance with instructions for use provided in the labeling, can be reasonably expected to result in significant injury to the user.

Eaton reserves the right, without notice, to change design or construction of any products and to discontinue or limit distribution of any products. Eaton also reserves the right to change or update, without notice, any technical information contained in this bulletin.

Eaton
Electronics Division
1000 Eaton Boulevard
Cleveland, OH 44122
United States
www.eaton.com/elx

© 2017 Eaton
All Rights Reserved
Printed in USA
Publication No. 4426-EE-PCN17019
May 2017

Eaton is a registered trademark.

All other trademarks are property of their respective owners.

Powering Business Worldwide