GXO-L72J

2.5V Low Jitter LVDS Oscillator with Power Saving

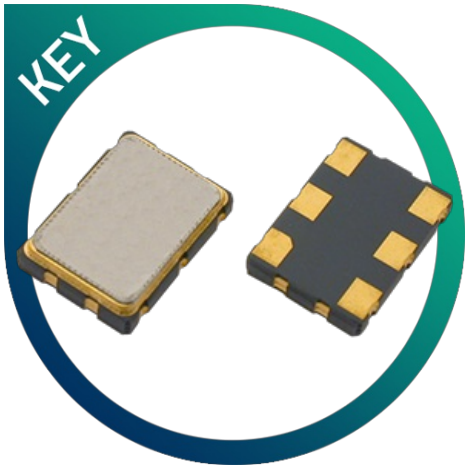

- LVDS outputs
- Low phase jitter
- Enable / disable tristate function
- Designed for SONET, SDH, IEEE1394 etc

CONFIGURABLE OPTIONS

Parameter	Option Code
Frequency	
Frequency stability * see note below	
Any	
±100ppm	B
±50ppm	A
±25ppm	
Operating temperature range	
Any	
-10 to +70°C	I
-40 to +85°C	
Enable / disable function	
Any	
Tristate (control via pad 1)	
None (pad 1 not connected)	N

*** Frequency stability is inclusive of calibration @ 25°C, operating temperature range, supply voltage change and load change.**

SPECIFICATIONS

Frequency range	80.0 ~ 200MHz
Dimensions	7.0 x 5.0 x 1.65mm
Storage temperature range	-40 to +85°C
Supply voltage (V_{DD})	+2.5V (±5%)
Supply current	70mA max, 50mA typ
Output	LVDS
Offset voltage	1.25V typ
Differential output voltage	0.33V typ
Output load	100Ω
Logic levels	'0' level = 0.9V max '1' level = 1.6V min
Start up time	10ms max
Waveform symmetry	45:55 max @ 50%V_{P-P}
Rise / fall time	1.0ns max (20 ~ 80%V_{P-P})
Output enable / disable time	2ms / 200ns max
Stand-by current	30µA max
Phase jitter RMS	1ps max (0.3ps typ), 12kHz~20MHz

PACKAGE DRAWING

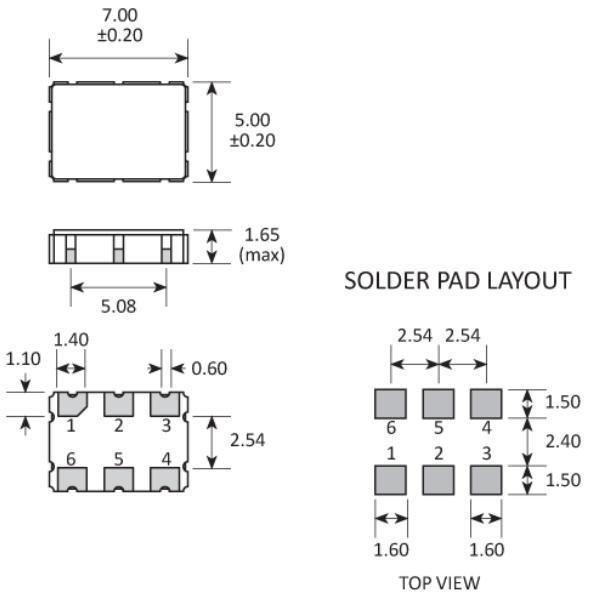

PAD	CONNECTION
1	Enable / disable or Not connected
2	Not connected
3	Ground
4	Output 1
5	Output 2
6	Supply

Dimensions in mm

ORDERING INFORMATION

To request a quotation for the GXO-L72J please use the configurable options form to choose the options you require and then submit your configured product to our team. Our expert advisers are always happy to help with your requirements and can be contacted on +44 1460 256 100 or at sales@golledge.com.

Following product selection you will be issued with a seven character Golledge part number. Your Golledge part number is the internationally accepted Golledge manufacturing part number (MPN) that should be used for all project documentation, including bills of materials (BoMs) and purchase orders.

If you have any queries regarding any of our documentation our dedicated sales team will be happy to help.

ENABLE / DISABLE FUNCTION

Input (pad 1)	Output 1 (pad 4)	Output 2 (pad 5)
Open	Enabled	Enabled
'1' level (≥0.7 V_{DD})	Enabled	Enabled
'0' level (≤0.3 V_{DD})	High Impedanceive	High Impedance

MARKING

FREQUENCY DC
• PARTNO

• Pin 1
Marking type: Laser

DC = Date Code in YM, eg. "GF" = Jun 2017

	A	B	C	D	E	F	G	H	J	K	L	M
Y	1	2	3	4	5	6	7	8	9	0		
M	Jan	Feb	Mar	Apr	May	Jun	Jul	Aug	Sep	Oct	Nov	Dec

SOLDERING PROFILE

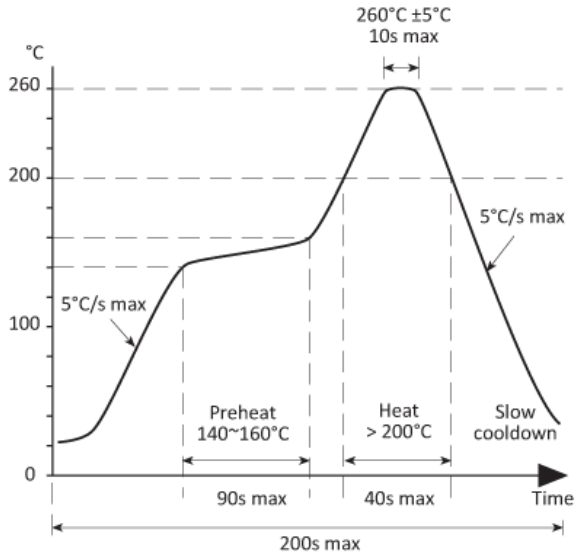

TAPE & REEL SPECIFICATION

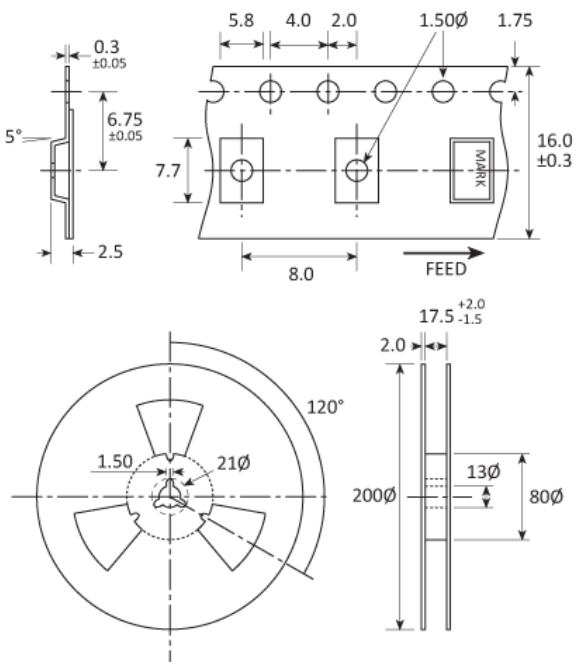

Dimensions in mm

HANDLING & STORAGE

Human Body Model (HBM) 1A (250V to <500V)

Moisture Sensitivity Level (MSL): 1 (or not applicable)

CONSTRUCTION

Ceramic body with gold-plated pads
Metal lid, seam sealed

MATERIAL COMPOSITION

Lead-free (< 0.1% by weight)

RoHS 2 compliant with no exemptions. See our declaration

REACH compliant. See our statement

Free of conflict minerals. See our declaration

Free of Halogens. See our declaration

Free of Ozone-depleting substances. See our declaration

Nominal Net Mass: 160mg

COMPOSITION

MCDFamily GXO-L72.pdf

OTHER INFORMATION

About Golledge

We are the UK's leading supplier of frequency control products and are proud to serve the global electronics industry. Our philosophy is a focus firmly on your requirements by striving to meet and exceed your needs. We do this by ensuring the utmost quality and consistency in our products and services. If you have any queries about the Golledge service or any of our products please get in touch, we'd love to hear from you.

Come and visit

Eaglewood Park, ILMINSTER,
Somerset,TA19 9DQ, England

Give us a call

Tel: +44 1460 256 100
Fax: +44 1460 256 101

Email us

sales@golledge.com

Our Worldwide Distributors

Belgium & Luxembourg

Alcom Electronics NV/SA

Email info@alcom.be
Web www.alcom.be
Tel +32 (0)3 458.30.33

China, Hong Kong - 中国 / 香港

Meiya China

Email sales@meiyatech.com
Web www.meiyatech.com
Tel +86 755 2823 1923

France

Equipments Scientifique

Email comp@es-france.com
Web www.es-france.com
Tel +33 1 47 95 99 89

Germany

MEV Elektronik Service GmbH

Email info@mev-elektronik.com
Web www.mev-elektronik.com
Tel +49 54 24 23 40-0

India

V5 Semiconductors

Email sales@v5semiconductors.com
Web v5semiconductors.com
Tel +91-80-2661 0621

Israel

Phoenix Technologies Ltd

Email sales@phnx.co.il
Web www.phnx.co.il
Tel +972 9 764 4800

Netherlands

Alcom Electronics BV

Email info@alcom.nl
Web alcom.nl
Tel +31 (0)10 288.25.00

Norway

Link Nordic

Email bjorn.nyjordet@linknordic.com
Web linknordic.com
Tel +47 93 22 68 90

Russia - Россия

EFO Ltd

Email elena@efo.ru
Web www.golledge.ru
Tel +7(812)327-8654

Spain & Portugal

R.C. Microelectronica, S.A.

Email ventas@rcmicro.es
Web www.rcmicro.es
Tel +34 93 260 21 66

Our customer feedback is testament to our quality; "Never had such good service as this from anyone in 35 years of being in the industry, this is impressive and has really helped us out of a corner to keep the design flowing" Andy (Senior Design Engineer), "As always your support is state of the art" Nicoleta (Material Management), "Legendary work - as usual it has to be said" John (Operations).
To take advantage of our highly praised service get in touch with us today.