# 2.5V & 3.3V LV-PECL Oscillator

**GXO-E72**

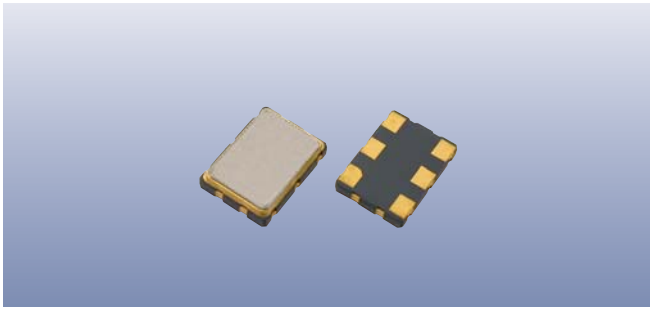

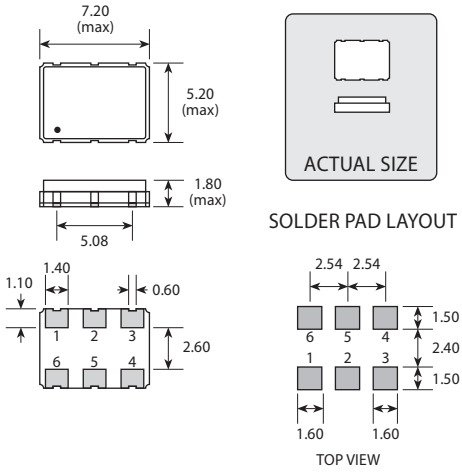


| PAD | CONNECTION |
|---|---|
| 1 | Enable / disable or Not connected |
| 2 | Not connected |
| 3 | Ground |
| 4 | Output 1 |
| 5 | Output 2 |
| 6 | Supply |

Scale 2:1

## Features

- **Differential outputs**
- **Enable / disable tristate option**
- **Fast rise / fall times**
- **Designed for SONET, SDH, IEEE1394 etc**

## Standard Frequencies

| Frequencies in MHz | |
|---|---|
| 100.0000 | 155.5200 |
| 106.2500 | 156.2500 |
| 108.0000 | 161.1230 |
| 125.0000 | 164.3550 |
| 133.0000 | |

Other frequencies available. Please consult our sales office.

## Specifications

| Parameters | Variant L | Variant J | Option Codes |
|---|---|---|---|
| **Frequency range:** 100 ~ 165MHz | ■ | ■ | |
| **Frequency stability*:** ±100ppm | ■ | ■ | |
| ±50ppm | □ | □ | B |
| ±25ppm | □ | □ | A |
| **Operating temperature range:** | | | |
| -10 to +70°C | ■ | ■ | |
| -40 to +85°C | □ | □ | I |
| **Storage temperature range:** | | | |
| -40 to +85°C | ■ | ■ | |
| **Supply voltage ($V_{DD}$):** +3.3V (±5%) | ■ | | |
| +2.5V (±5%) | | ■ | |
| **Supply current:** | | | |
| 90mA max, 60mA typ | ■ | ■ | |
| **Output:** Complementary LV-PECL | ■ | ■ | |
| **Output load:** 50Ω (into $V_{DD}$-2V) | ■ | ■ | |
| **Logic levels:** '0' level (max) | 1.745V | 1.195V | |
| '1' level (min) | 2.215V | 1.415V | |
| **Start up time:** 10ms max | ■ | ■ | |
| **Waveform symmetry:** | | | |
| 45:55 max @ 50%$V_{P-P}$ | ■ | | |
| 40:60 max @ 50%$V_{P-P}$ | | ■ | |
| **Rise / fall time:** | | | |
| 1.0ns max (20 ~ 80%$V_{P-P}$) | ■ | ■ | |
| **Enable / disable function:** | | | |
| Tristate (control via pad 1) | ■ | ■ | |
| None (pad 1 not connected) | □ | □ | N |
| **Output enable / disable time:** | | | |
| 2ms / 200ns max | ■ | ■ | |
| **Stand-by current:** 30µA max | ■ | ■ | |
| **Period jitter RMS:** 5ps max, 3ps typ | ■ | ■ | |
| **Ageing:** ±5ppm max, 1st year | ■ | ■ | |

■ Standard. □ Optional - Please specify required code(s) when ordering

* Frequency stability is inclusive of calibration @ 25°C, operating temperature range, supply voltage change and load change.

## Ordering Information

Product name + variant + option codes (if any) + frequency

eg: **GXO-E72L 108.0MHz** 3.3V, ±100ppm -10+70°C

**GXO-E72J/BI 125.0MHz** 2.5V, ±50ppm -40+85°C

Option code X (eg GXO-E72L/X) denotes a custom spec.

## Enable / Disable Function

| Input (pad 1) | Output 1 (pad 4) | Output 2 (pad 5) |
|---|---|---|
| Open | Enabled | Enabled |
| '1' level (≥0.7$V_{DD}$) | Enabled | Enabled |
| '0' level (≤0.3$V_{DD}$) | High Impedance | High Impedance |

Tel: **+44 1460 256 100** Fax: **+44 1460 256 101** E-mail: **sales@golledge.com** Web: **www.golledge.com**

Golledge

22 May 2006

# Product Information

**GXO-E72**

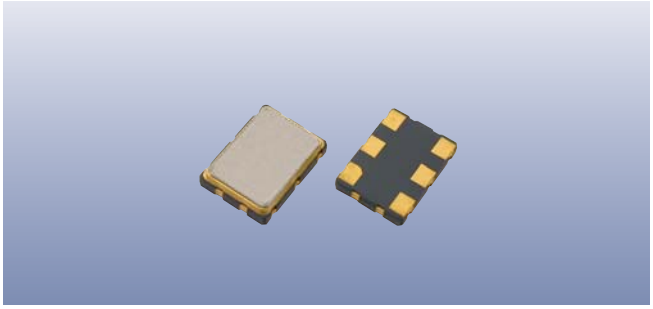

## Packaging & Handling

Production quantities supplied on T & R, 1k pcs per reel.
Small quantities may be supplied on tape (no reel), or in bulk.

- Static sensitive product. Observe proper handling precautions

## Marking

GOLLEDGE
FREQUENCY
• PARTNO DC

- Pin 1

Marking type: Laser
DC = Date code in YM, eg "CE" = May 2003

| | A | B | C | D | E | F | G | H | J | K | L | M |
|---|---|---|---|---|---|---|---|---|---|---|---|---|
| Y | 1 | 2 | 3 | 4 | 5 | 6 | 7 | 8 | 9 | 0 | | |
| M | Jan | Feb | Mar | Apr | May | Jun | Jul | Aug | Sep | Oct | Nov | Dec |

## Tape & Reel Specification

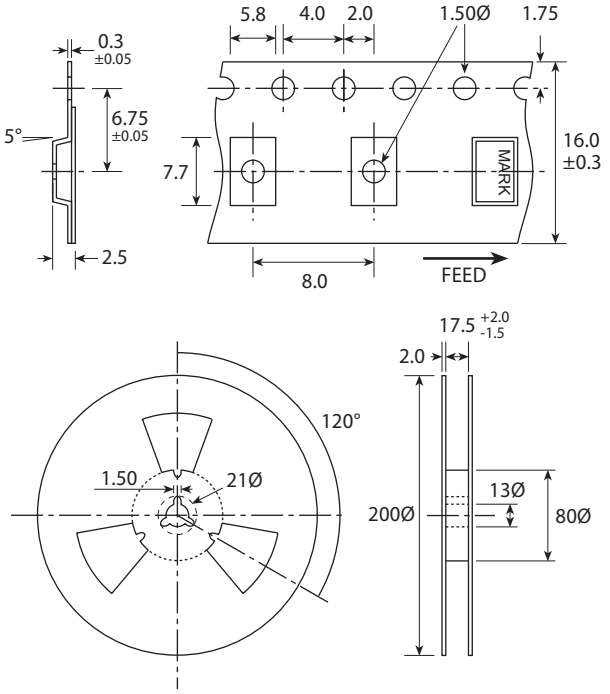


Not to scale. Dimensions in mm. Tolerances ±0.1mm unless otherwise stated

## Construction

- **Ceramic body with gold-plated pads**
- **Metal lid, seam sealed**

## Composition

This product is lead-free, and is fully compliant with the RoHS directive 2002/95/EC

## Soldering Profile

