2.5V & 3.3V LV-PECL Oscillator

GXO-E72

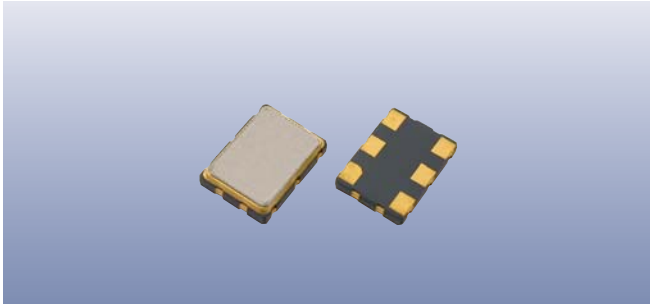

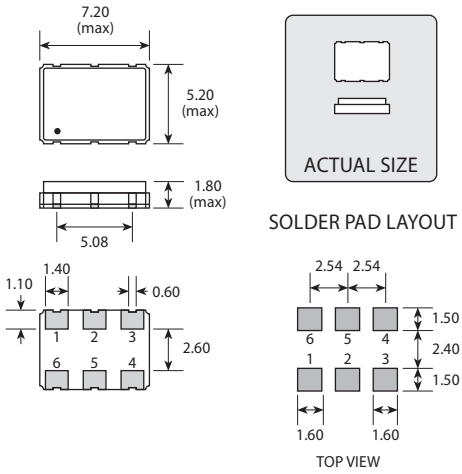

PAD	CONNECTION
1	Enable / disable or Not connected
2	Not connected
3	Ground
4	Output 1
5	Output 2
6	Supply

Scale 2:1

Features

- ***Differential outputs***
- ***Enable / disable tristate option***
- ***Fast rise / fall times***
- ***Designed for SONET, SDH, IEEE1394 etc***

Standard Frequencies

Frequencies in MHz	
100.0000	155.5200
106.2500	156.2500
108.0000	161.1230
125.0000	164.3550
133.0000	

Other frequencies available. Please consult our sales office.

Specifications

Parameters		***Variant***		***Option Codes***
		L	***J***	
Frequency range:	40.0 ~ 200MHz	■	■	
Frequency stability*:	±100ppm	■	■	
	±50ppm	□	□	B
	±25ppm	□	□	A
Operating temperature range:				
	-10 to +70C	■	■	
	-40 to +85C	□	□	I
Storage temperature range:				
	-40 to +85C	■	■	
Supply voltage (V_{DD}):	+3.3V (±5%)	■		
	+2.5V (±5%)		■	
Supply current:				
	90mA max, 60mA typ	■	■	
Output:	Complementary LV-PECL	■	■	
Output load:	50Ω (into V_{DD}-2V)	■	■	
Logic levels:	ëOí level (max)	1.745V	1.195V	
	ë1í level (min)	2.215V	1.415V	
Start up time:	10ms max	■	■	
Waveform symmetry:				
	45:55 max @ 50%V_{P-P}	■		
	40:60 max @ 50%V_{P-P}		■	
Rise / fall time:				
	1.0ns max (20 ~ 80%V_{P-P})	■	■	
Enable / disable function:				
	Tristate (control via pad 1)	■	■	
	None (pad 1 not connected)	□	□	N
Output enable / disable time:				
	2ms / 200ns max	■	■	
Stand-by current:	30µA max	■	■	
Period jitter RMS:	5ps max, 3ps typ	■	■	
Ageing:	±5ppm max, 1st year	■	■	

■ Standard. □ Optional - Please specify required code(s) when ordering

* Frequency stability is inclusive of calibration @ 25C, operating temperature range, supply voltage change and load change.

Ordering Information

Product name + variant + option codes (if any) + frequency

eg: ***GXO-E72L 108.0MHz*** 3.3V, ±100ppm -10+70C

GXO-E72J/BI 125.0MHz 2.5V, ±50ppm -40+85C

Option code X (eg GXO-E72L/X) denotes a custom spec.

Enable / Disable Function

Input (pad 1)	***Output 1 (pad 4)***	***Output 2 (pad 5)***
Open	Enabled	Enabled
ë1í level (≥0.7V_{DD})	Enabled	Enabled
ëOí level (≤0.3V_{DD})	High Impedance	High Impedance

Tel: ***+44 1460 256 100*** Fax: ***+44 1460 256 101*** E-mail: ***sales@golledge.com*** Web: ***www.golledge.com***

Golledge

06 Jul 2007

Product Information

GXO-E72

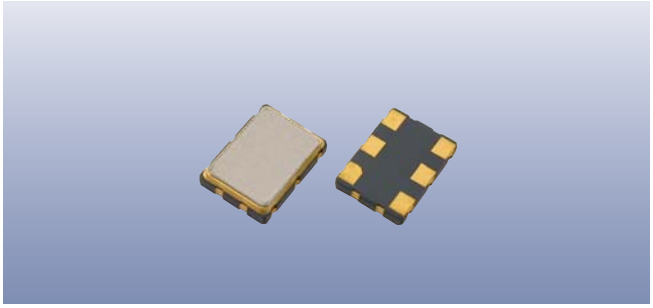

Packaging & Handling

Production quantities supplied on T & R, 1k pcs per reel.
Small quantities may be supplied on tape (no reel), or in bulk.

◆ Static sensitive product. Observe proper handling precautions

Marking

GOLLEDGE
FREQUENCY
• PARTNO DC

• Pin 1
Marking type: Laser
DC = Date code in YM, eg ì CEî = May 2003

	A	B	C	D	E	F	G	H	J	K	L	M
Y	1	2	3	4	5	6	7	8	9	0		
M	Jan	Feb	Mar	Apr	May	Jun	Jul	Aug	Sep	Oct	Nov	Dec

Tape & Reel Specification

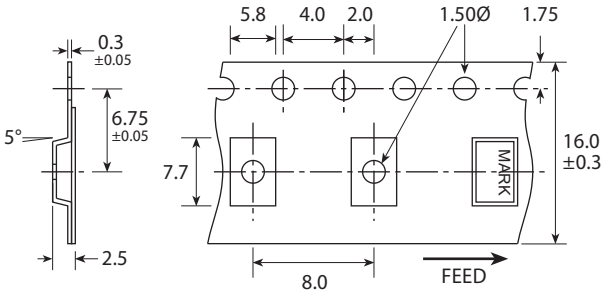

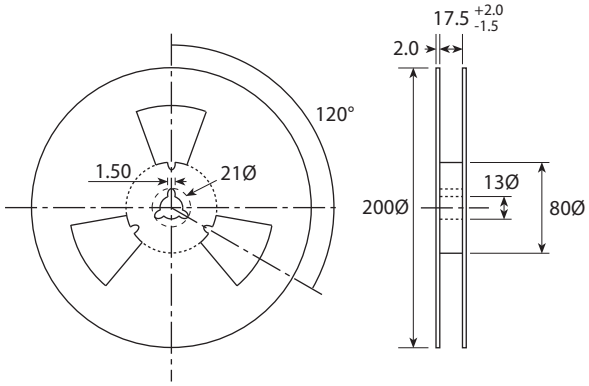

Not to scale. Dimensions in mm. Tolerances ±0.1mm unless otherwise stated

Construction

- ***Ceramic body with gold-plated pads***
- ***Metal lid, seam sealed***

Composition

RoHS 2002/95/EC

This product is lead-free, and is fully compliant with the RoHS directive 2002/95/EC

Pb LeadFree

Soldering Profile

