3.3V CMOS Oscillator

GXO-7531

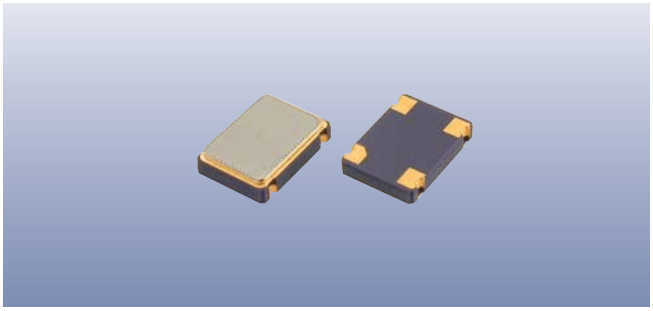

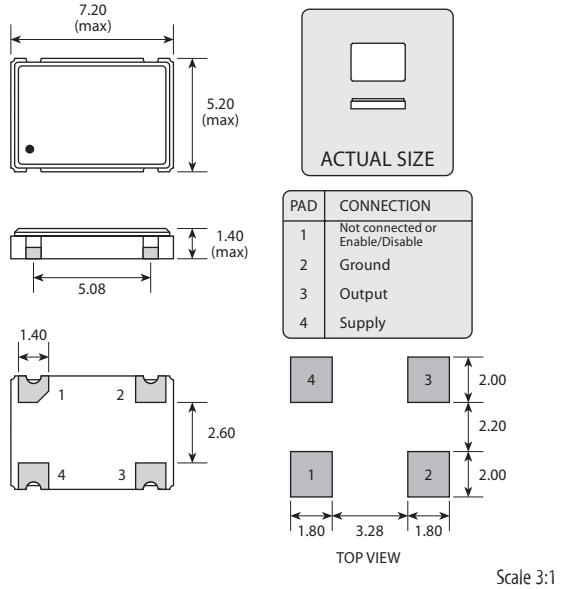

Scale 3:1

Features

- **Ceramic package with metal lid**
- **Standard frequencies held in stock**
- **Enable / disable tristate function**
- **Power saving option**
- **Competitive pricing**

Standard Frequencies

Frequencies in MHz		
1.84320	16.00000	40.00000
2.00000	16.38400	44.23680
3.68640	18.43200	48.00000
4.00000	20.00000	50.00000
5.00000	24.00000	54.00000
6.14400	24.57600	56.44800
7.37280	25.00000	60.00000
8.00000	27.00000	64.00000
9.60000	29.49120	66.66600
10.00000	30.00000	70.00000
11.05920	32.00000	80.00000
12.00000	32.76800	100.00000
12.28800	33.86880	106.25000
14.31818	36.86400	125.00000

Other frequencies available. Please consult our sales office.

Specifications

Parameters	Product GXO-7531	Option Codes
Frequency range: 0.50 ~ 125MHz	■	
Frequency stability: ±100ppm	■	
±50ppm	□	B
±25ppm	□	A
±20ppm	□	D
Operating temperature range:		
-10 to +70°C	■	
-40 to +85°C	□	I
Storage temperature range:		
-55 to +125°C	■	
Supply voltage (V_{DD}):		
+3.3V (±5%)	■	
Supply current (max):		
10mA (0.5 ~ 14.9MHz)	■	
15mA (15.0 ~ 29.9MHz)	■	
20mA (30.0 ~ 39.9MHz)	■	
25mA (40.0 ~ 49.9MHz)	■	
30mA (50.0 ~ 59.9MHz)	■	
35mA (60.0 ~ 79.9MHz)	■	
45mA (80.0 ~ 99.9MHz)	■	
50mA (100 ~ 125MHz)	■	
Logic levels: '0' level = 10%V_{DD} max	■	
'1' level = 90%V_{DD} min	■	
Start up time: 10ms max	■	
Waveform symmetry: 45:55 max	■	
40:60 max (>50.0 ~ 125MHz)	■	
Driving ability:		
15pF HCMOS (*see note)	■	
Rise / fall time: 10ns max	■	
6ns max (>40.0MHz)	■	
Enable / disable function:		
None (pad 1 not connected)	□	N
Standard tristate, no power saving (E/D times 100ns / 100ns)	■	
Power-saving, standby current 10µA (E/D times 10ms / 100ns)	□	P

■ Standard. □ Optional - Please specify required code(s) when ordering

* Note: will drive up to 50pF, but figures for rise/fall and supply current may vary from those shown. For details, contact our sales office.

Ordering Information

Product name + option codes (if any) + frequency

eg: **GXO-7531 48.0MHz** 3.3V, ±100ppm, -10+70°C

GXO-7531/BIP 64.0MHz 3.3V, ±50ppm, -40+85°C, power-saving

Enable / Disable Function

Input (pad 1)	Output (pad 3)
Open	Enabled
'1' level	Enabled
'0' level	High Impedance

Tel: **+44 1460 256 100** Fax: **+44 1460 256 101** E-mail: **sales@golledge.com** Web: **www.golledge.com**

Golledge

10 Mar 2006

Product Information

GXO-7531

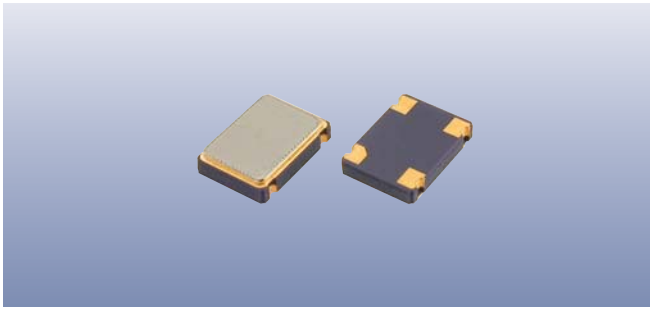

Packaging & Handling

Production quantities supplied on T & R, 1k pcs per reel.
Small quantities may be supplied on tape (no reel), or in bulk.

- Static sensitive product. Observe proper handling precautions

Marking

GOLLEDGE
FREQUENCY
- PARTNO DC

- Pin 1

Marking type: Laser
DC = Date code in YM, eg "CE" = May 2003

	A	B	C	D	E	F	G	H	J	K	L	M
Y	1	2	3	4	5	6	7	8	9	0		
M	Jan	Feb	Mar	Apr	May	Jun	Jul	Aug	Sep	Oct	Nov	Dec

Tape & Reel Specification

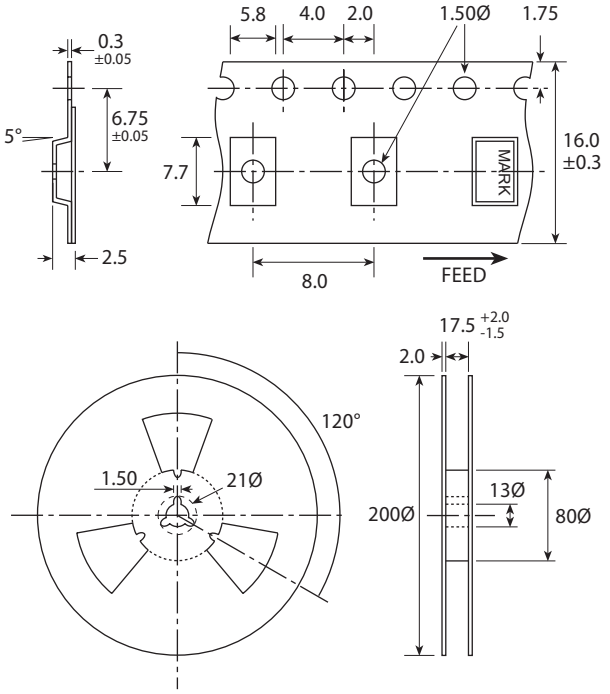

Not to scale. Dimensions in mm. Tolerances ±0.1mm unless otherwise stated

Construction

- **Ceramic body with gold-plated pads**
- **Metal lid, seam sealed**

Composition

This product is lead-free, and is fully compliant with the RoHS directive 2002/95/EC

Soldering Profile

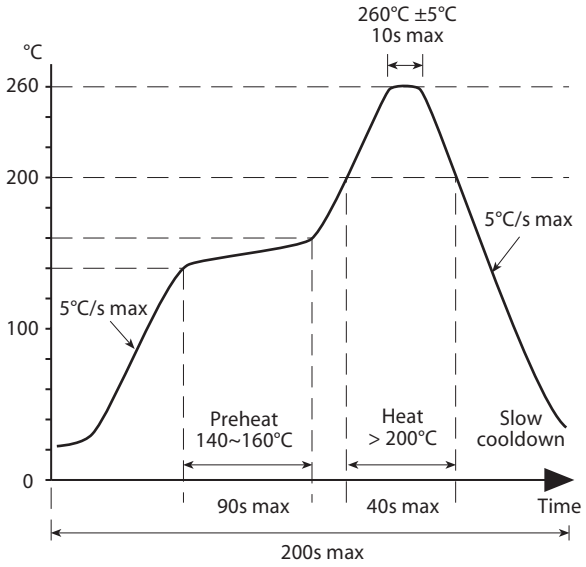

Tel: **+44 1460 256 100** Fax: **+44 1460 256 101** E-mail: **sales@golledge.com** Web: **www.golledge.com**