GXO-2201G

1.8V CMOS Oscillator with Low Jitter

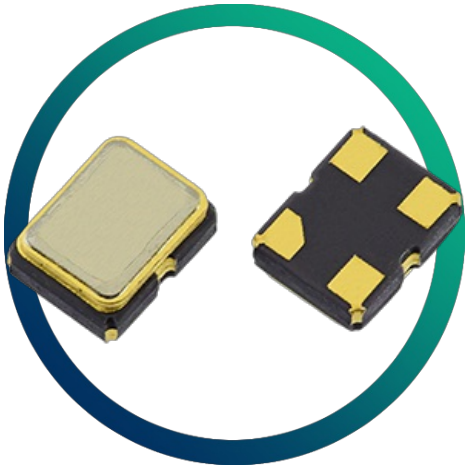

- Competitive pricing for high volumes
- Miniature ceramic package with metal lid
- Low voltage supply
- Enable / disable tristate function

CONFIGURABLE OPTIONS

Parameter	Option Code
Frequency	
Frequency stability * see note below	
Any	
±50ppm	B
±25ppm	A

*** Frequency stability is inclusive of calibration @ 25°C, operating temperature range, supply voltage change and load change.**

SPECIFICATIONS

Frequency range	1.50 ~ 54.0MHz
Dimensions	2.0 x 1.6 x 0.85mm
Operating temperature range	-20 to +70°C
Storage temperature range	-40 to +85°C
Supply voltage (V_{DD})	+1.8V (±5%)
Supply current	2.5mA max (< 24.0MHz) 3.5mA max (24.0 ~ 39.9MHz) 4.5mA max (>= 40MHz)
Logic levels	'0' level = 10%V_{DD} max '1' level = 90%V_{DD} min
Start up time	10ms max
Waveform symmetry	45:55 max @ 50%V_{DD}
Driving ability	15pF CMOS
Rise / fall time (10~90%V_{DD})	6.5ns max
Enable / disable function	Tristate (control via pad 1)
Period jitter RMS	5ps max
Phase jitter RMS	1ps max, 12kHz~20MHz
Ageing	±5ppm max 1st year

PACKAGE DRAWING

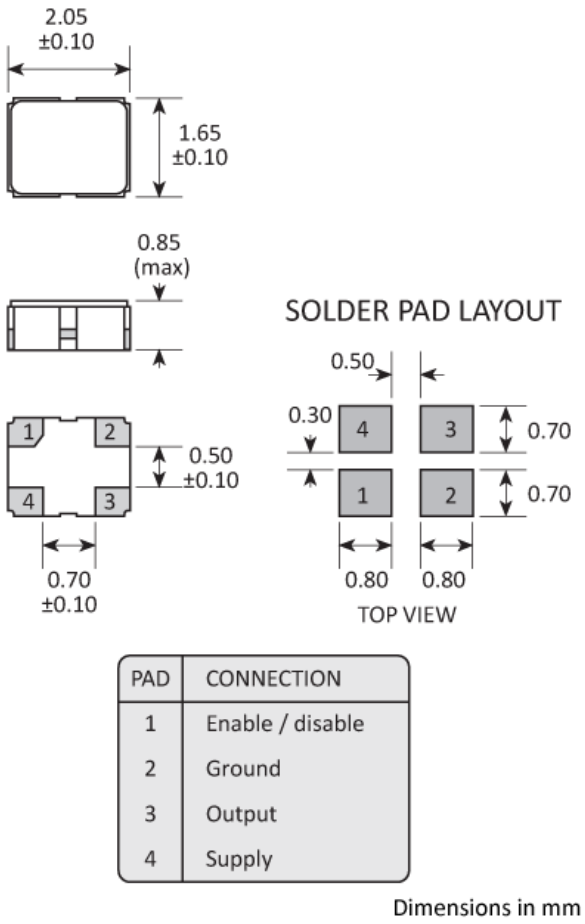

PAD	CONNECTION
1	Enable / disable
2	Ground
3	Output
4	Supply

Dimensions in mm

ORDERING INFORMATION

To request a quotation for the GXO-2201G please use the configurable options form to choose the options you require and then submit your configured product to our team. Our expert advisers are always happy to help with your requirements and can be contacted on +44 1460 256 100 or at sales@golledge.com.

Following product selection you will be issued with a seven character Golledge part number. Your Golledge part number is the internationally accepted Golledge manufacturing part number (MPN) that should be used for all project documentation, including bills of materials (BoMs) and purchase orders.

If you have any queries regarding any of our documentation our dedicated sales team will be happy to help.

ENABLE / DISABLE FUNCTION

Input (pad 1)	Output (pad 3)
Open	Enabled
'1' level	Enabled
'0' level	High Impedance

MARKING

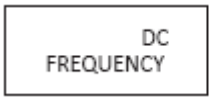

Marking type: Laser

DC = Date Code in YM, eg. "GF" = Jun 2017

	A	B	C	D	E	F	G	H	J	K	L	M
Y	1	2	3	4	5	6	7	8	9	0		
M	Jan	Feb	Mar	Apr	May	Jun	Jul	Aug	Sep	Oct	Nov	Dec

SOLDERING PROFILE

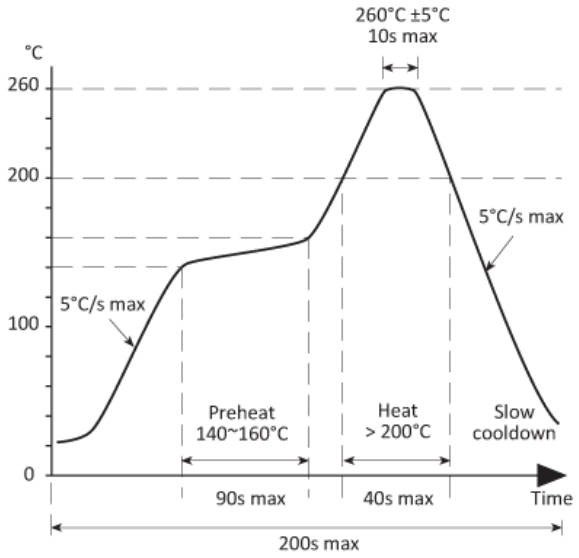

TAPE & REEL SPECIFICATION

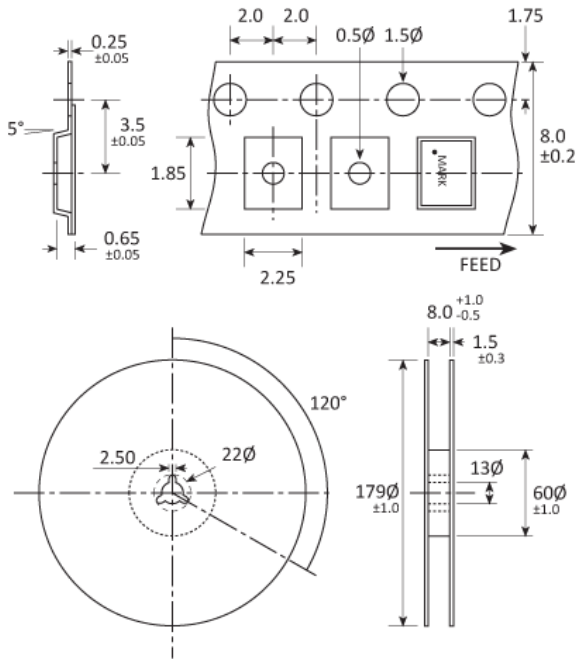

Dimensions in mm

HANDLING & STORAGE

Human Body Model (HBM) 1A (250V to <500V)

Moisture Sensitivity Level (MSL): 1 (or not applicable)

CONSTRUCTION

Ceramic body with gold-plated pads
Metal lid, seam sealed

MATERIAL COMPOSITION

Lead-free (< 0.1% by weight)

RoHS 2 compliant with no exemptions. See our declaration

REACH compliant. See our statement

Free of conflict minerals. See our declaration

Free of Halogens. See our declaration

Free of Ozone-depleting substances. See our declaration

COMPOSITION

MCDFamily GXO-2201.pdf

OTHER INFORMATION

About Golledge

We are the UK's leading supplier of frequency control products and are proud to serve the global electronics industry. Our philosophy is a focus firmly on your requirements by striving to meet and exceed your needs. We do this by ensuring the utmost quality and consistency in our products and services. If you have any queries about the Golledge service or any of our products please get in touch, we'd love to hear from you.

Come and visit

Eaglewood Park, ILMINSTER,
Somerset,TA19 9DQ, England

Give us a call

Tel: +44 1460 256 100
Fax: +44 1460 256 101

Email us

sales@golledge.com

Our Worldwide Distributors

Belgium & Luxembourg

Alcom Electronics NV/SA

Email info@alcom.be
Web www.alcom.be
Tel +32 (0)3 458.30.33

China, Hong Kong - 中国 / 香港

Meiya China

Email sales@meiyatech.com
Web www.meiyatech.com
Tel +86 755 2823 1923

France

Equipments Scientifique

Email comp@es-france.com
Web www.es-france.com
Tel +33 1 47 95 99 89

Germany

MEV Elektronik Service GmbH

Email info@mev-elektronik.com
Web www.mev-elektronik.com
Tel +49 54 24 23 40-0

India

V5 Semiconductors

Email sales@v5semiconductors.com
Web v5semiconductors.com
Tel +91-80-2661 0621

Israel

Phoenix Technologies Ltd

Email sales@phnx.co.il
Web www.phnx.co.il
Tel +972 9 764 4800

Netherlands

Alcom Electronics BV

Email info@alcom.nl
Web alcom.nl
Tel +31 (0)10 288.25.00

Norway

Link Nordic

Email bjorn.nyjordet@linknordic.com
Web linknordic.com
Tel +47 93 22 68 90

Russia - Россия

EFO Ltd

Email elena@efo.ru
Web www.golledge.ru
Tel +7(812)327-8654

Spain & Portugal

R.C. Microelectronica, S.A.

Email ventas@rcmicro.es
Web www.rcmicro.es
Tel +34 93 260 21 66

Our customer feedback is testament to our quality; "Never had such good service as this from anyone in 35 years of being in the industry, this is impressive and has really helped us out of a corner to keep the design flowing" Andy (Senior Design Engineer), "As always your support is state of the art" Nicoleta (Material Management), "Legendary work - as usual it has to be said" John (Operations).
To take advantage of our highly praised service get in touch with us today.