DATA SHEET

GTL2004

Quad GTL/GTL+ to LVTTL/TTL bidirectional latched translator

Product specification
Supersedes data of 1999 May 15

1999 Jul 19

Philips
Semiconductors

PHILIPS

Quad GTL/GTL+ to LVTTL/TTL bidirectional latched translator

GTL2004

FEATURES

- Operates as a quad GTL/GTL$^+$ sampling receiver or as a LVTTL/TTL to GTL/GTL$^+$ driver
- Quad bidirectional bus interface
- Separate latch enable for each bit
- Live insertion/extraction permitted
- B outputs include 30Ω series resistance
- Latch-up protection exceeds 500mA per JEDEC Std 17
- ESD protection exceeds 2000V per JEDEC Std

DESCRIPTION

The GTL2004 is a quad translating transceiver designed for 3.3V system interface with a GTL/GTL$^+$ bus.

The direction pin allows the part to function as either a GTL to TTL sampling receiver or as a TTL to GTL interface. Separate latch enables allow sampling and holding of data from the GTL bus.

PIN CONFIGURATION

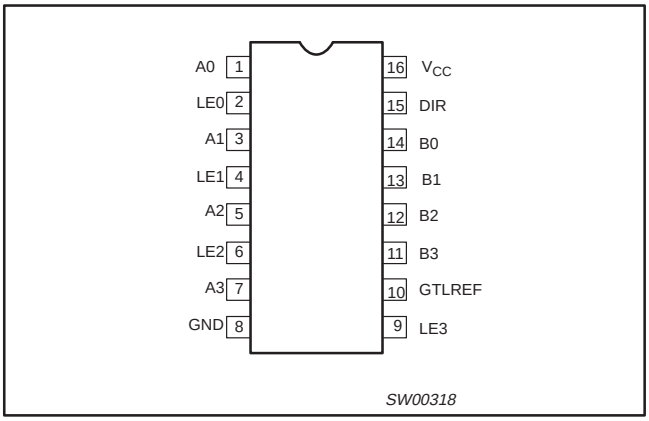

PIN DESCRIPTION

PIN NUMBER	SYMBOL	NAME AND FUNCTION
15	DIR	Direction control input
1, 3, 5, 7	A0 – A3	Data inputs/outputs (A side, GTL)
11, 12, 13, 14	B0 – B3	Data inputs/outputs (B side, TTL)
2, 4, 6, 9	LE0 – LE3	Latch enables
10	GTLREF	GTL reference voltage
8	GND	Ground (0V)
16	V_{CC}	Positive supply voltage

QUICK REFERENCE DATA

SYMBOL	PARAMETER	CONDITIONS T_{amb} = 25°C	TYPICAL		UNIT
			B to A	A to B	
t_{PLH} t_{PHL}	Propagation delay An to Bn or Bn to An	C_L = 50pF; V_{CC} = 3.3V	2.0 1.8	4.4 4.7	ns
C_{IN}	Input capacitance DIR, LEn	V_I = 0V or V_{CC}	3.0	3.0	pF
$C_{I/O}$	I/O pin capacitance	Outputs disabled; $V_{I/O}$ = 0V or 3.152V	7.2	4.6	pF

ORDERING INFORMATION

PACKAGES	TEMPERATURE RANGE	ORDER CODE	DWG NUMBER
16-Pin Plastic TSSOP Type II	–40°C to +85°C	GTL2004 PW DH	SOT403-1

LOGIC SYMBOL

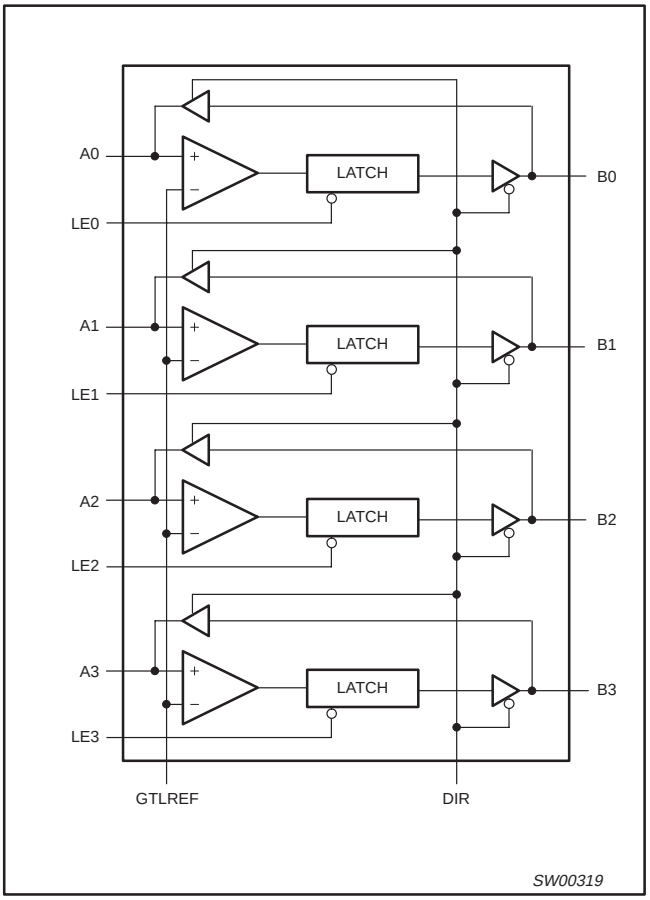

FUNCTION TABLE

INPUT		INPUT/OUTPUT	
DIR	**LEn**	**A**	**B**
L	H	Inputs	An = Bn
L	L	X	NC
H	X	Bn = An	Inputs

H = HIGH voltage level
L = LOW voltage level
X = Don’t care
NC = No change

ABSOLUTE MAXIMUM RATINGS[1]

In accordance with the Absolute Maximum System (IEC 134); voltages are referenced to GND (ground = 0V)

SYMBOL	PARAMETER	TEST CONDITIONS	RATING	UNIT
V_{CC}	DC supply voltage		–0.5 to +4.6	V
I_{IK}	DC input diode current	$V_I < 0$	–50	mA
V_I	DC input voltage[3]	A port	–0.5 to +7.0	V
		B port	–0.5 to +4.6	V
I_{OK}	DC output diode current	$V_O < 0$	–50	mA
V_O	DC output voltage[3]	Output in OFF or HIGH state; A port	–0.5 to +7.0	V
		Output in OFF or HIGH state; B port	–0.5 to +4.6	V
I_{OL}	Current into any output in the LOW state	A port	128	mA
		B port	80	mA
I_{OH}	Current into any output in the HIGH state	A port	–64	mA
T_{stg}	Storage temperature range		–60 to +150	°C

NOTES:

1. Stresses beyond those listed may cause permanent damage to the device. These are stress ratings only and functional operation of the device at these or any other conditions beyond those indicated under “recommended operating conditions” is not implied. Exposure to absolute-maximum-rated conditions for extended periods may affect device reliability.
2. The performance capability of a high-performance integrated circuit in conjunction with its thermal environment can create junction temperatures which are detrimental to reliability. The maximum junction temperature of this integrated circuit should not exceed 150°C.
3. The input and output negative voltage ratings may be exceeded if the input and output clamp current ratings are observed.

RECOMMENDED OPERATING CONDITIONS[1]

SYMBOL	PARAMETER	TEST CONDITIONS	MIN	TYP	MAX	UNIT
V_{CC}	Supply voltage		0		3.6	V
V_{TT}	Termination voltage	GTL	1.14	1.2	1.26	V
		GTL+	1.35	1.5	1.65	
V_{REF}	Supply voltage	GTL	0.74	0.8	0.87	V
		GTL+	0.87	1.0	1.10	
V_I	Input voltage	A port	0		V_{TT}	V
		Except A port	0		5.5	
V_{IH}	HIGH-level input voltage	A port	V_{REF} + 50mV			V
		Except A port	2			
V_{IL}	LOW-level input voltage	A port			V_{REF} – 50mV	V
		Except A port			0.8	
I_{OH}	HIGH-level output current	B port			–12	mA
I_{OL}	LOW-level output current	A port			40	mA
		B port			12	mA
T_{amb}	Operating free-air temperature range		–40		85	°C

NOTE:

1. Unused control inputs must be held HIGH or LOW to prevent them from floating.

DC ELECTRICAL CHARACTERISTICS

Over recommended operating conditions. Voltages are referenced to GND (ground = 0V).

SYMBOL	PARAMETER	TEST CONDITIONS	LIMITS			UNIT
			–40°C to +85°C			
			MIN	TYP[1]	MAX	
V_{OH}	B port	V_{CC} = 3.0 to 3.6V; I_{OH} = –100µA	V_{CC}–0.2			V
		V_{CC} = 3.0V; I_{OH} = –12mA	2.0			
V_{OL}	A port	V_{CC} = 3.0V; I_{OL} = 40mA			0.4	V
	B port	V_{CC} = 3.0V; I_{OL} = 12mA			0.8	V
I_I	Control inputs	V_{CC} = 3.6V; V_I = V_{CC} or GND			± 1	µA
	A port	V_{CC} = 3.6V; V_I = V_{TT} or GND			± 1	
	B port	V_{CC} = 0 or 3.6V; V_I = 5.5			10	
		V_{CC} = 3.6V; V_I = V_{CC}			± 1	
		V_{CC} = 3.6V; V_I = 0V			–5	
I_{OFF}	A port	V_{CC} = 0V; V_I or V_O = 0 to 4.5V			± 100	µA
I_{EX}	B port	V_O = 5.5V; V_{CC} = 3.0V		50	125	µA
I_{CC}	A or B port	V_{CC} = 3.6V; V_I = V_{CC} or GND; I_O = 0			3	mA
ΔI_{CC}[3]	B port or control inputs	V_{CC} = 3.6V; V_I = V_{CC} –0.6V			500	µA
C_I	Control inputs	V_I = 3.0V or 0		3		pF
C_{IO}	B port	V_O = 3.0V or 0		7.2		pF
	A port	V_O = V_{TT} or 0		4.6		

NOTES:
1. All typical values are measured at V_{CC} = 3.3V and T_{amb} = 25°C.
2. The input and output voltage ratings may be exceeded if the input and output current ratings are observed.
3. This is the increase in supply current for each input that is at the specified TTL voltage level rather than $V_{CC\ or\ GND}$.

AC CHARACTERISTICS (3.3V ±0.3V RANGE)

SYMBOL	PARAMETER	WAVEFORM	LIMITS (GTL)			LIMITS (GTL+)			UNIT
			V_{CC} = 3.3V ±0.3V, V_{REF} = 0.8V			V_{CC} = 3.3V ±0.3V, V_{REF} = 1.0V			
			MIN	TYP[1]	MAX	MIN	TYP[1]	MAX	
t_{PLH} t_{PHL}	Bn to An	2		2.0 1.8	2.8 2.5		2.0 1.8	2.8 2.5	ns
t_{PLH} t_{PHL}	An to Bn	3		4.4 4.7	6.5 5.8		4.4 4.5	5.7 5.1	ns
t_{PLH} t_{PHL}	LEn to Bn	1		3.5 3.4	4.9 4.2		3.5 3.4	4.9 4.2	ns

NOTE:
1. All typical values are at V_{CC} = 3.3V and T_{amb} = 25°C.

AC SETUP REQUIREMENT (3.3V ±0.3V RANGE)

Over recommended ranges of supply voltage.[1]

SYMBOL	PARAMETER	WAVEFORM	LIMITS (GTL)		LIMITS (GTL+)		UNIT
			V_{CC} = 3.3V ±0.3V, V_{REF} = 0.8V		V_{CC} = 3.3V ±0.3V, V_{REF} = 1.0V		
			MIN	MAX	MIN	MAX	
$t_S(H)$ $t_S(L)$	Setup time (An to LEn)	4		1.3 1.5		1.2 1.5	ns
$t_h(H)$ $t_h(L)$	Hold time (An to LEn)	4		0.0 0.0		0.0 0.0	ns
$t_w(H)$	LEn pulse width	2		1.1		1.1	ns

NOTE:
1. These parameters are warranted but not production tested.

AC WAVEFORMS

V_M = 1.5V at $V_{CC} \geq$ 3.0V, $V_M = V_{CC}/2$ at $V_{CC} \leq$ 2.7V for A ports and control pins
$V_M = V_{Ref}$ for B ports
$V_X = V_{OL}$ + 0.3V at A ports
$V_Y = V_{OH}$ – 0.3V at A ports
$V_X = V_{REF}$ at B ports

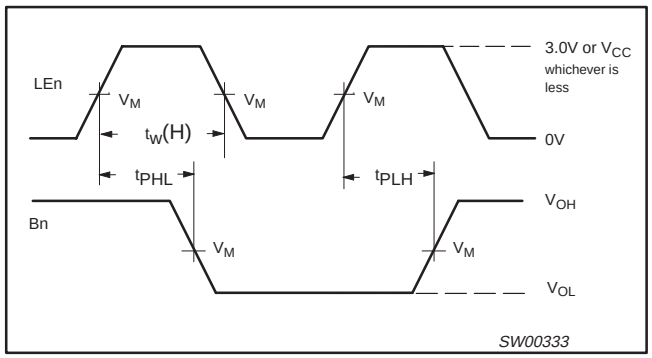

Waveform 1. Propagation delay, Enable to Output and Enable Pulse Width

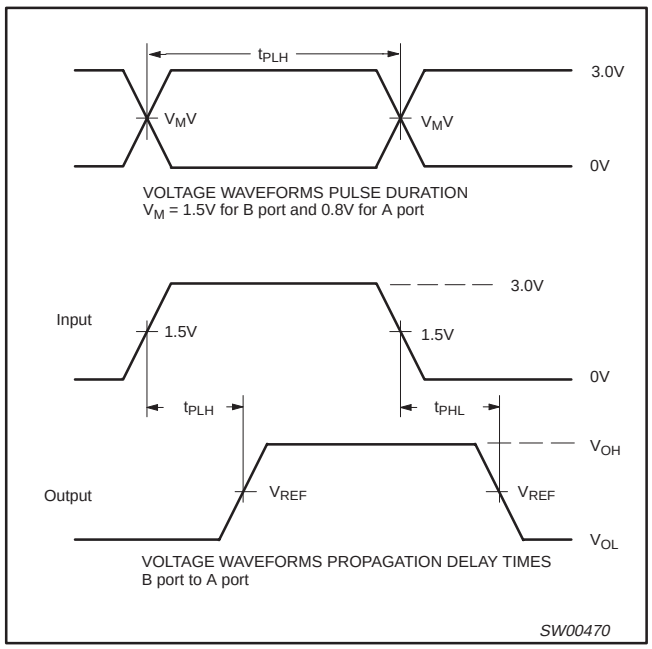

Waveform 2.

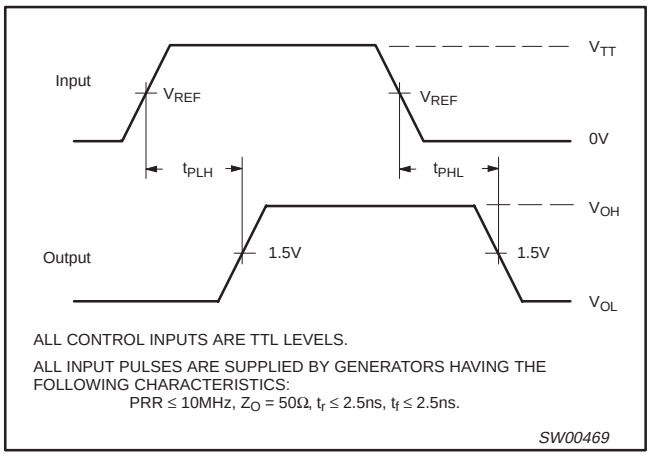

Waveform 3. Propagation delay A port to B port

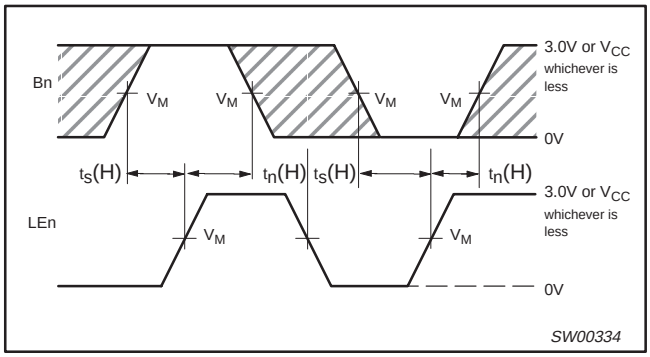

Waveform 4. Data Setup and Hold Times

TEST CIRCUIT

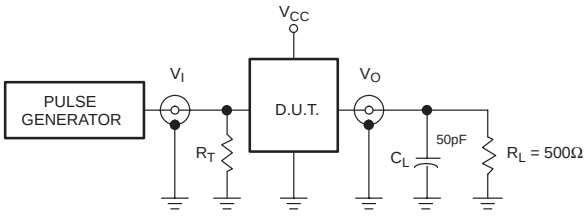

Test Circuit for switching times

DEFINITIONS

R_L = Load resistor

C_L = Load capacitance includes jig and probe capacitance

R_T = Termination resistance should be equal to Z_{OUT} of pulse generators.

SW00471

Figure 1. Load circuitry for switching times

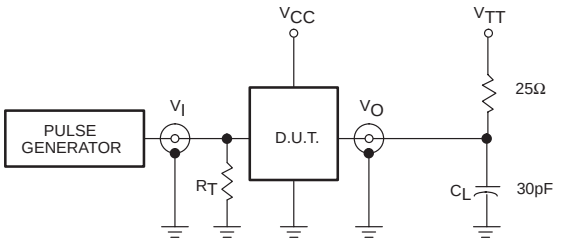

SW00332

Figure 2. Load circuit for A outputs

TSSOP16: plastic thin shrink small outline package; 16 leads; body width 4.4 mm SOT403-1

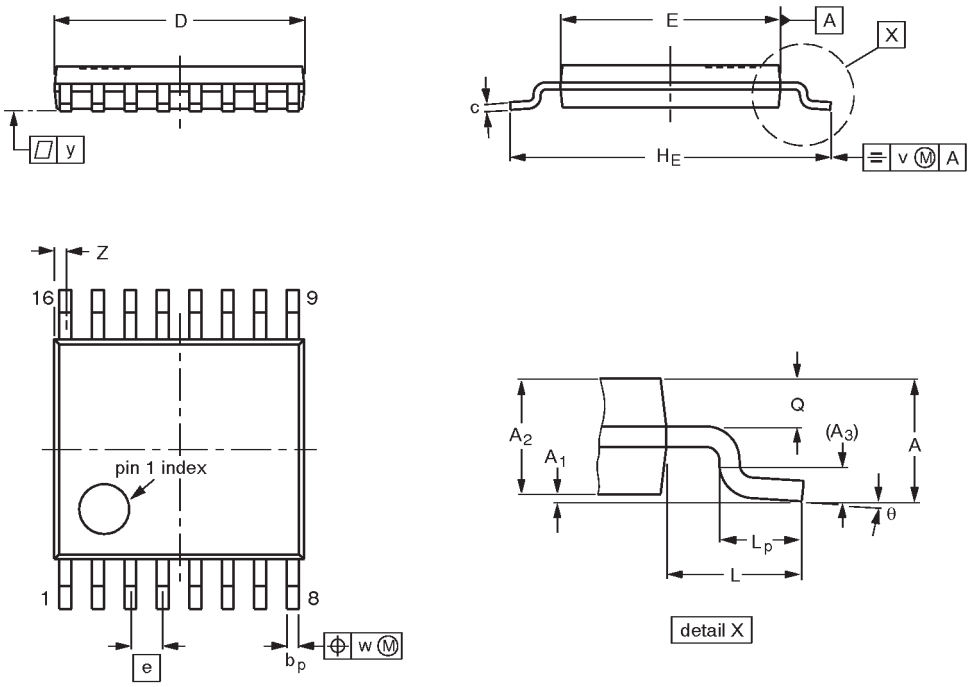

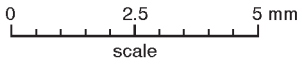

DIMENSIONS (mm are the original dimensions)

UNIT	A max.	A_1	A_2	A_3	b_p	c	D (1)	E (2)	e	H_E	L	L_p	Q	v	w	y	Z (1)	θ
mm	1.10	0.15 0.05	0.95 0.80	0.25	0.30 0.19	0.2 0.1	5.1 4.9	4.5 4.3	0.65	6.6 6.2	1.0	0.75 0.50	0.4 0.3	0.2	0.13	0.1	0.40 0.06	8° 0°

Notes

1. Plastic or metal protrusions of 0.15 mm maximum per side are not included.
2. Plastic interlead protrusions of 0.25 mm maximum per side are not included.

OUTLINE VERSION	REFERENCES				EUROPEAN PROJECTION	ISSUE DATE
	IEC	JEDEC	EIAJ			
SOT403-1		MO-153				~~94-07-12~~ 95-04-04

NOTES

Quad GTL/GTL+ to LVTTL/TTL bidirectional latched translator

GTL2004

Data sheet status

Data sheet status	Product status	Definition [1]
Objective specification	Development	This data sheet contains the design target or goal specifications for product development. Specification may change in any manner without notice.
Preliminary specification	Qualification	This data sheet contains preliminary data, and supplementary data will be published at a later date. Philips Semiconductors reserves the right to make changes at any time without notice in order to improve design and supply the best possible product.
Product specification	Production	This data sheet contains final specifications. Philips Semiconductors reserves the right to make changes at any time without notice in order to improve design and supply the best possible product.

[1] Please consult the most recently issued datasheet before initiating or completing a design.

Definitions

Short-form specification — The data in a short-form specification is extracted from a full data sheet with the same type number and title. For detailed information see the relevant data sheet or data handbook.

Limiting values definition — Limiting values given are in accordance with the Absolute Maximum Rating System (IEC 134). Stress above one or more of the limiting values may cause permanent damage to the device. These are stress ratings only and operation of the device at these or at any other conditions above those given in the Characteristics sections of the specification is not implied. Exposure to limiting values for extended periods may affect device reliability.

Application information — Applications that are described herein for any of these products are for illustrative purposes only. Philips Semiconductors make no representation or warranty that such applications will be suitable for the specified use without further testing or modification.

Disclaimers

Life support — These products are not designed for use in life support appliances, devices or systems where malfunction of these products can reasonably be expected to result in personal injury. Philips Semiconductors customers using or selling these products for use in such applications do so at their own risk and agree to fully indemnify Philips Semiconductors for any damages resulting from such application.

Right to make changes — Philips Semiconductors reserves the right to make changes, without notice, in the products, including circuits, standard cells, and/or software, described or contained herein in order to improve design and/or performance. Philips Semiconductors assumes no responsibility or liability for the use of any of these products, conveys no license or title under any patent, copyright, or mask work right to these products, and makes no representations or warranties that these products are free from patent, copyright, or mask work right infringement, unless otherwise specified.

Philips Semiconductors
811 East Arques Avenue
P.O. Box 3409
Sunnyvale, California 94088–3409
Telephone 800-234-7381

© Copyright Philips Electronics North America Corporation 1999
All rights reserved. Printed in U.S.A.

Date of release: 07-99

Document order number: 9397 750 06247

Let's make things better.

Philips Semiconductors

PHILIPS