SILVER BUTTON - GT QFN Socket - Direct mount, solderless

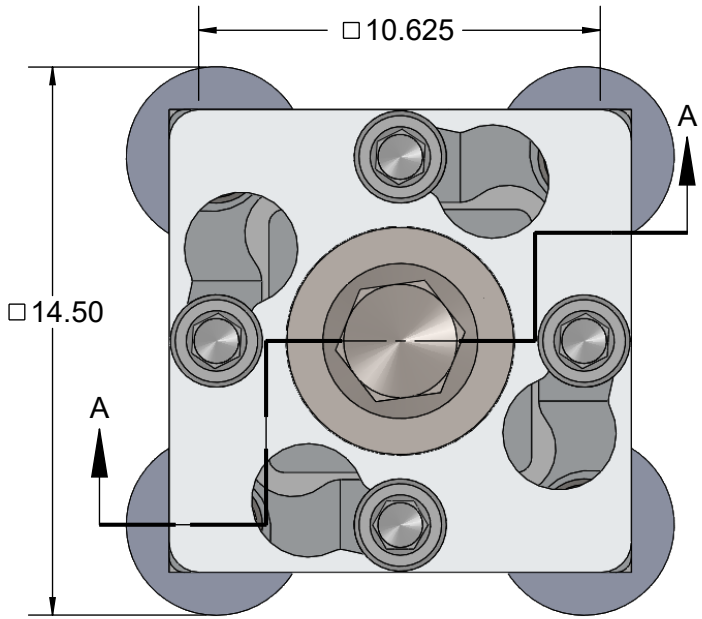

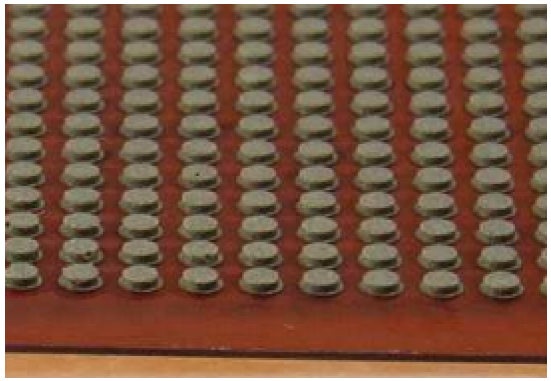

GT ELASTOMER CONTACTOR

Features

- Directly mounts to target PCB (needs tooling holes) with hardware
- High speed, reliable Elastomer connection
- Minimum real estate required
- Compression plate distributes forces evenly
- Easily removable swivel socket lid

RECOMMENDED TORQUE: 6 N-cm [0.5 IN-OZ]
Remove torque when device is not under test

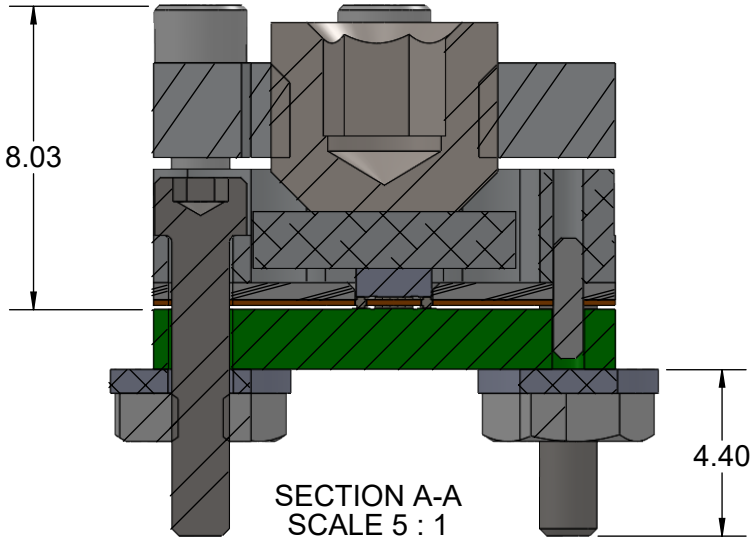

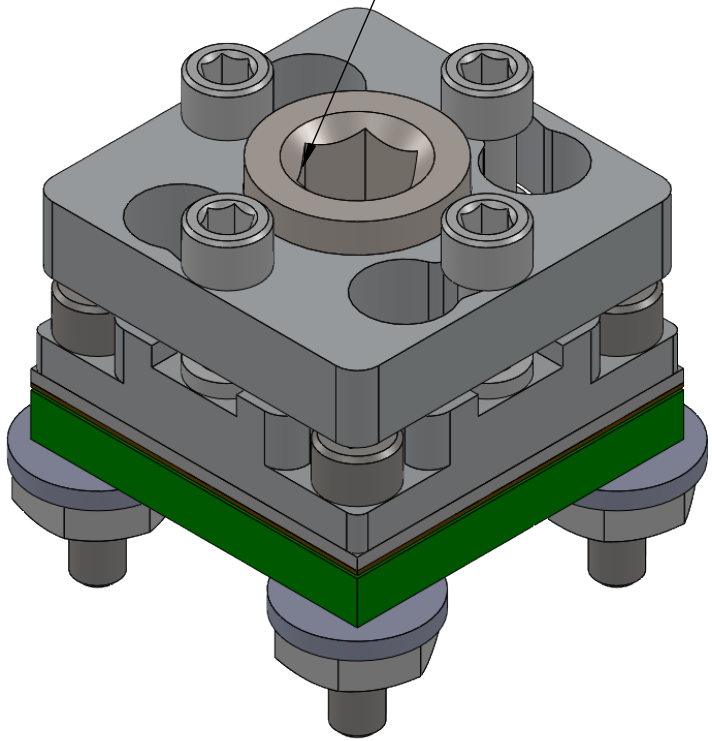

Description: GT-QFN16 2mm 0.4mm pitch swivel lid

Primary dimension units are millimeters, Secondary dimension units are [inches], Weight is in grams.

Tolerances: Hole diameters ±0.0254mm [±0.001"], Pitches (from true position) ±0.0762mm [±0.003"], substrate thickness tolerance ±10%, all other tolerances ±0.127mm [±0.005"] unless stated otherwise. Materials and specifications are subject to change without notice.

GT-QFN-3003 Drawing	Material: N/A Finish: N/A Weight: 4.19	STATUS: Released	SHEET: 1 OF 4	REV. A
©2015 Ironwood Electronics, Inc. Tele: (800) 404-0204 www.ironwoodelectronics.com		ENG: B. Schatz	DRAWN BY: M. Raske	SCALE: 5:1
		FILE: GT-QFN-3003 Dwg	DATE: 09/21/2015	

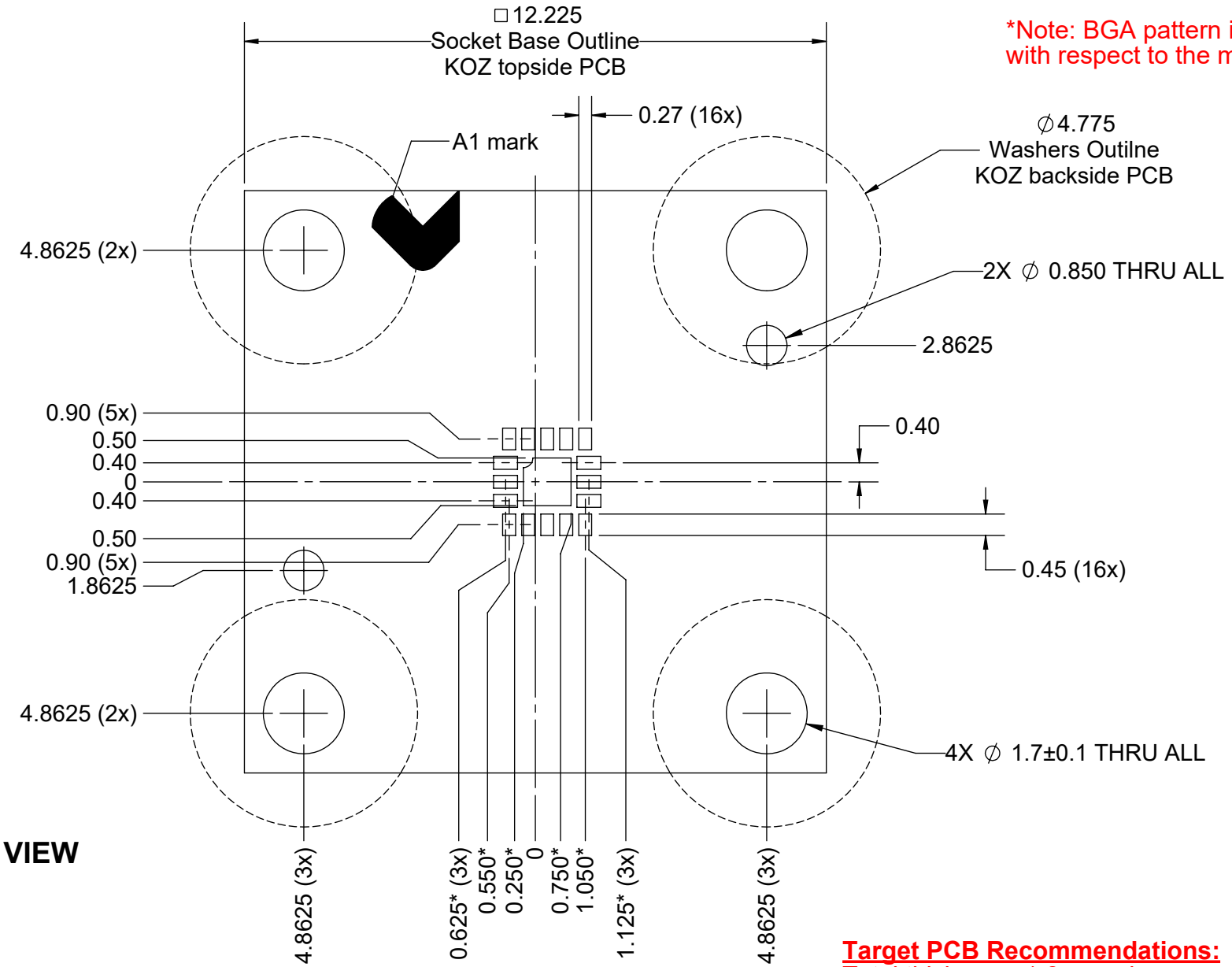

*Note: BGA pattern is not symmetrical with respect to the mounting holes.

TOP VIEW

Target PCB Recommendations:
Total thickness: 1.6mm min.
Plating: Gold or Solder finish
PCB Pad height: Same or higher than solder mask

Description: Recommended PCB Layout

Primary dimension units are millimeters, Secondary dimension units are [inches], Weight is in grams.

Tolerances: Hole diameters ±0.03mm [±0.001"], Pitches (from true position) ±0.025mm [±0.001"], substrate thickness tolerance ±10%, all other tolerances ±0.13mm [±0.005"] unless stated otherwise. Materials and specifications are subject to change without notice.

GT-QFN-3003 Drawing	Material: N/A Finish: N/A Weight: 4.19	STATUS: Released	SHEET: 2 OF 4	REV. A
©2015 Ironwood Electronics, Inc. Tele: (800) 404-0204 www.ironwoodelectronics.com		ENG: B. Schatz	DRAWN BY: M. Raske	SCALE: 8:1
		FILE: GT-QFN-3003 Dwg	DATE: 09/21/2015	

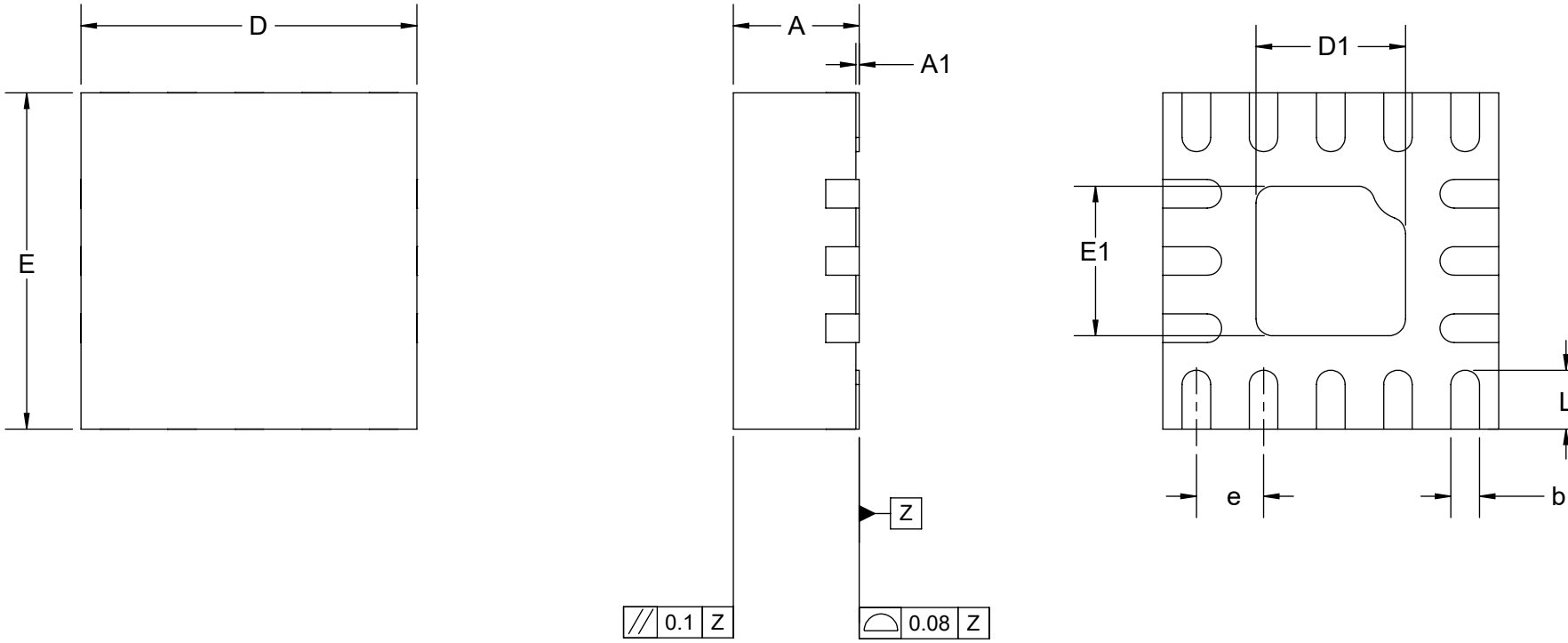

Ironwood Package Code: QFN16G

Dimensions are in millimeters.

1. Interpret dimensions and tolerances per ASME Y14.5M-1994.
2. Parallelism measurement shall exclude any effect of mark on top surface of package.

DIM	MIN	MAX
A	0.60	1.8
A1	0.00	0.05
b	0.12	0.22
L	0.25	0.45
D	2.00	
D1	0.74	0.99
E	2.00	
E1	0.74	0.99
e	0.40	

Description: Compatible Device

Primary dimension units are millimeters, Secondary dimension units are [inches], Weight is in grams.

Tolerances: Hole diameters ±0.03mm [±0.001"], Pitches (from true position) ±0.025mm [±0.001"], substrate thickness tolerance ±10%, all other tolerances ±0.13mm [±0.005"] unless stated otherwise. Materials and specifications are subject to change without notice.

GT-QFN-3003 Drawing	Material: N/A Finish: N/A Weight: 4.19	STATUS: Released	SHEET: 3 OF 4	REV. A
©2015 Ironwood Electronics, Inc. Tele: (800) 404-0204 www.ironwoodelectronics.com		ENG: B. Schatz	DRAWN BY: M. Raske	SCALE: 25:1
		FILE: GT-QFN-3003 Dwg	DATE: 09/21/2015	

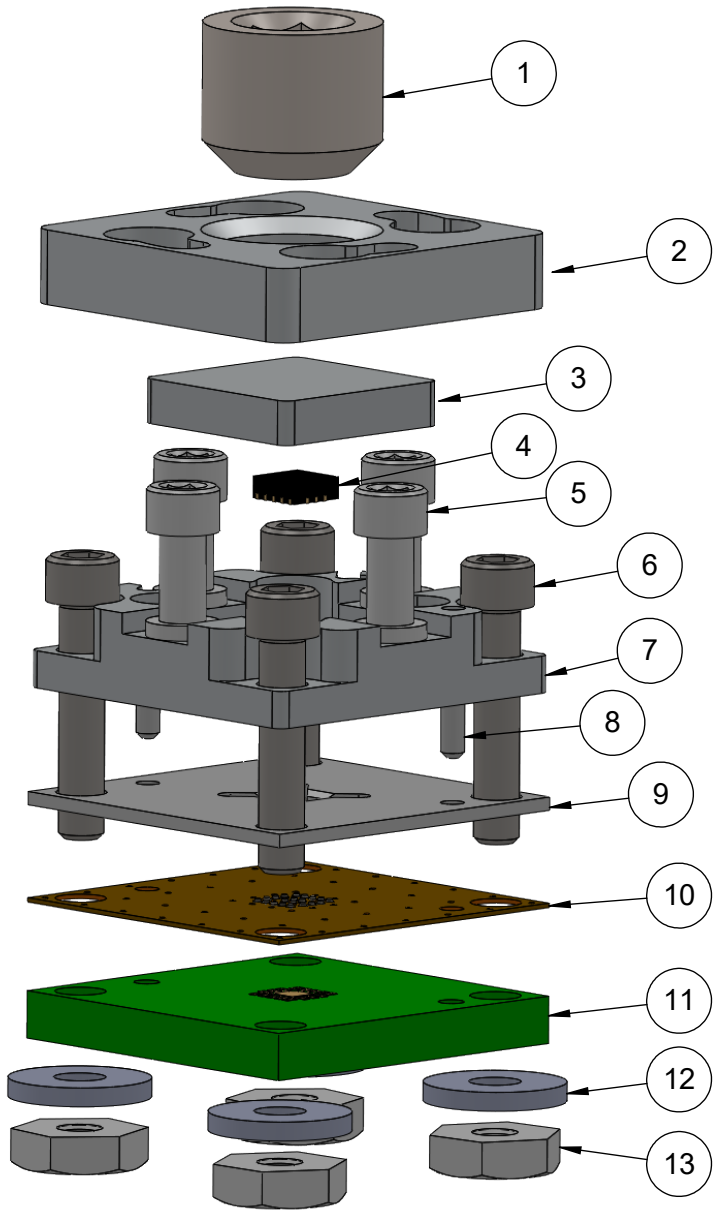

ITEM NO.	DESCRIPTION	Material
1	Compression Screw	Steel
2	Socket Lid	Aluminum
3	Compression Plate	Aluminum
4	Compatible IC	N/A
5	Shoulder Screw	Steel
6	Mounting Screw	Steel
7	Socket Base	Aluminum
8	Alignment Pin	Steel
9	IC Guide	Torlon or PEEK
10	GT elastomer	Silver adhesive in kapton substrate
11	Target PCB	N/A
12	Washer	Nylon
13	Nut	Steel

Description: Socket, Backing Plate Detail

Primary dimension units are millimeters, Secondary dimension units are [inches], Weight is in grams.

Tolerances: Hole diameters ±0.03mm [±0.001"], Pitches (from true position) ±0.025mm [±0.001"], substrate thickness tolerance ±10%, all other tolerances ±0.13mm [±0.005"] unless stated otherwise. Materials and specifications are subject to change without notice.

GT-QFN-3003 Drawing	Material: N/A Finish: N/A Weight: 4.19	STATUS: Released	SHEET: 4 OF 4	REV. A
©2015 Ironwood Electronics, Inc. Tele: (800) 404-0204 www.ironwoodelectronics.com		ENG: B. Schatz	DRAWN BY: M. Raske	SCALE: 4:1
		FILE: GT-QFN-3003 Dwg	DATE: 09/21/2015	