GT-BGA DIRECT MOUNT, SOLDERLESS SOCKET FOR BURN-IN AND TEST APPLICATIONS

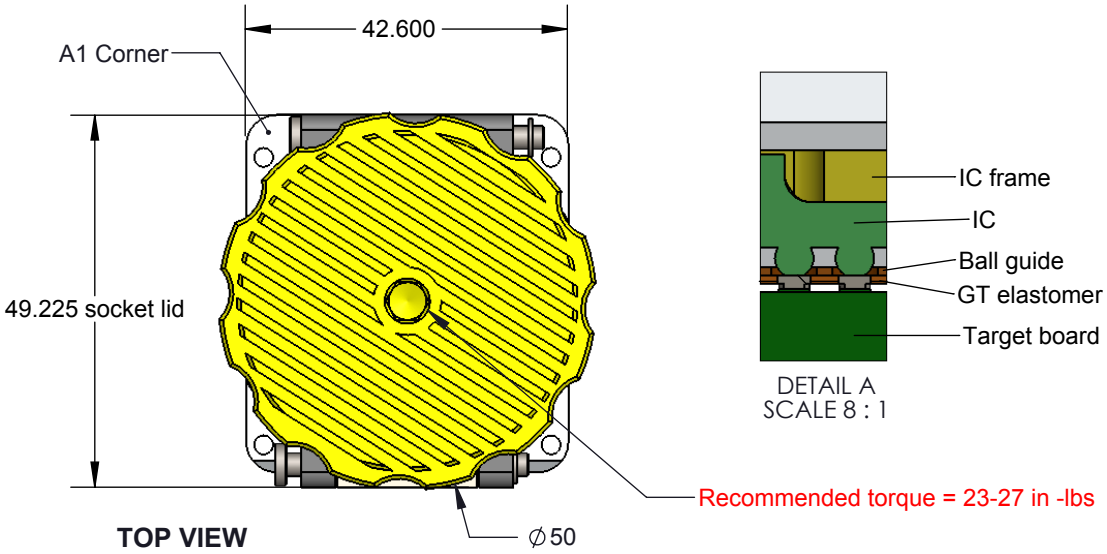

TOP VIEW

DETAIL A
SCALE 8 : 1

Features
- Wide temperature range (-55C to +160C).
- High current capability (up to 5A).
- Excellent signal integrity at high frequencies.
- Low and stable contact resistance for reliable production yield.
- Highly compliant to accommodate wide co-planarity variations.
- Automated probe manufacturing enables low cost and short lead time.

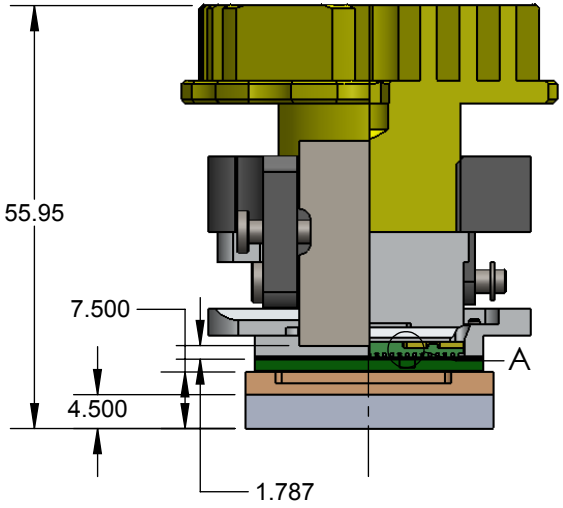

FRONT QUARTER SECTION VIEW

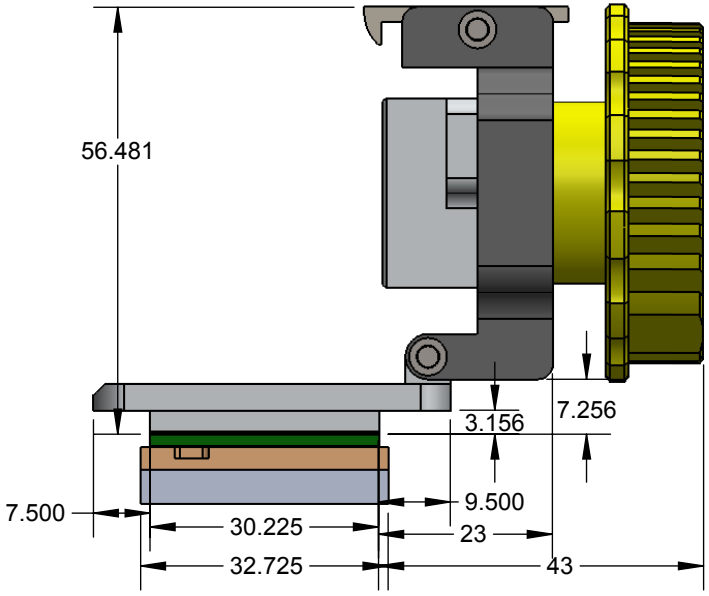

SIDE VIEW

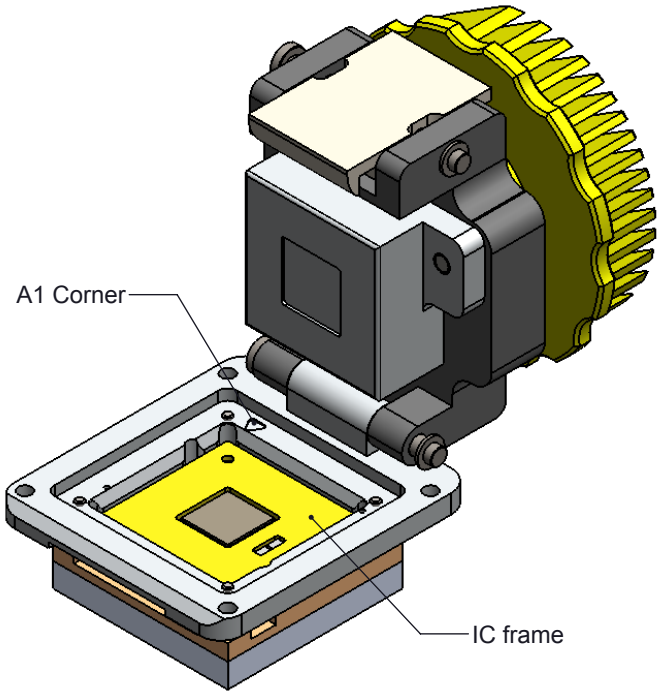

Description: Clamshell GT-BGA572 24x24 array 25x25 mm 1mm pitch

Primary dimension units are millimeters, Secondary dimension units are [inches], Weight is in grams.

Tolerances: Hole diameters ±0.03mm [±0.001"], Pitches (from true position) ±0.025mm [±0.001"], substrate thickness tolerance ±10%, all other tolerances ±0.13mm [±0.005"] unless stated otherwise. Materials and specifications are subject to change without notice.

GT-BGA-2019 Drawing	Material: Material <not specified>	STATUS: Released	SHEET: 1 OF 4	REV. A
Ironwood Electronics, Inc. Tele: (800) 404-0204 www.ironwoodelectronics.com	Finish: Weight: 159.85	ENG: S. Huang	DRAWN BY: M. Raske	SCALE: 1:1
		FILE: GT-BGA-2019 Dwg	DATE: 3/20/2015	

Recommended PCB Layout

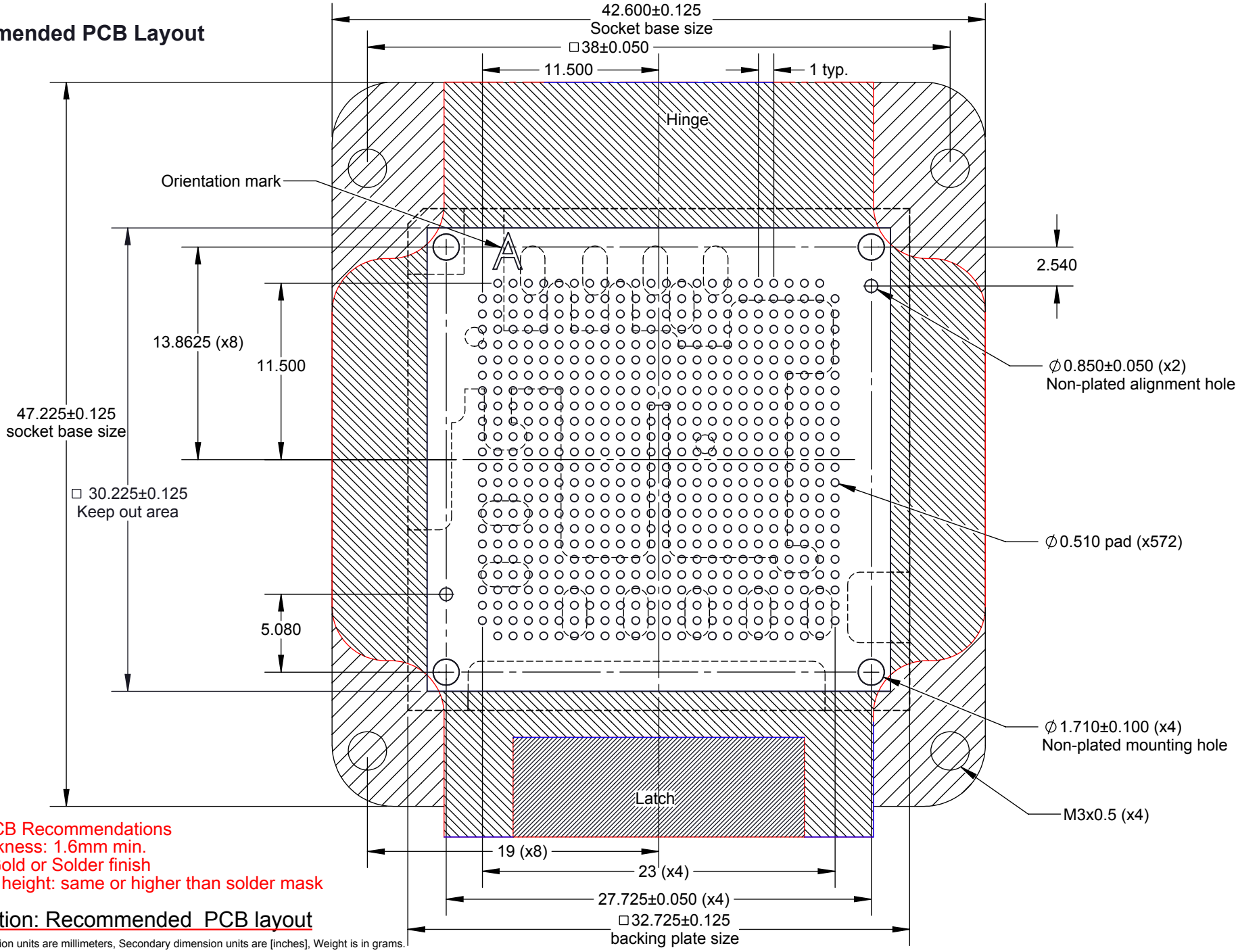

Target PCB Recommendations
Total thickness: 1.6mm min.
Plating: Gold or Solder finish
PCB Pad height: same or higher than solder mask

Description: Recommended PCB layout

Primary dimension units are millimeters, Secondary dimension units are [inches], Weight is in grams.

Tolerances: Hole diameters ±0.03mm [±0.001"], Pitches (from true position) ±0.025mm [±0.001"], substrate thickness tolerance ±10%, all other tolerances ±0.13mm [±0.005"] unless stated otherwise. Materials and specifications are subject to change without notice.

GT-BGA-2019 Drawing	Material: Material <not specified>	STATUS: Released	SHEET: 2 OF 4	REV. A
Ironwood Electronics, Inc. Tele: (800) 404-0204 www.ironwoodelectronics.com	Finish: Weight: 159.85	ENG: S. Huang	DRAWN BY: M. Raske	SCALE: 3:1
		FILE: GT-BGA-2019 Dwg	DATE: 3/20/2015	

Ironwood package code: BGA572A

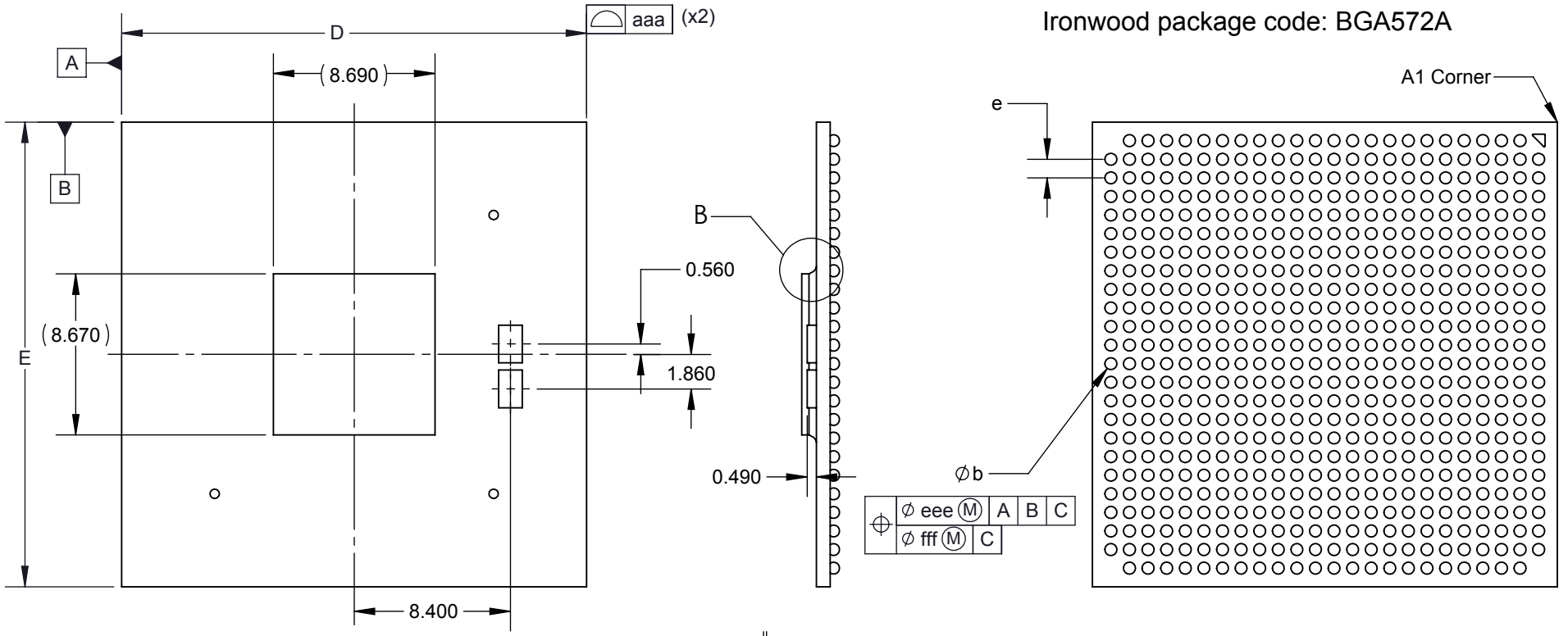

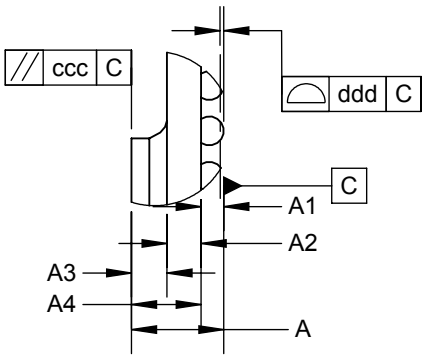

DETAIL B
SCALE 6 : 1

DIM	MIN	NOM	MAX
A	1.893	2.033	2.173
A1	0.40	0.50	0.60
A2	--	0.752	--
A3	0.746	0.781	0.816
A4	1.408	1.533	1.658
D	24.90	25.00	25.10
E	24.90	25.00	25.10
e	--	1.00	--
b	0.54	0.64	0.74
aaa	0.20		
ccc	0.25		
ddd	0.20		
eee	0.25		
fff	0.10		

Array: 24x24

1. Dimensions are in millimeters.
2. Interpret dimensions and tolerances per ASME Y14.5M-1994.
3. Dimension b is measured at the maximum solder ball diameter, parallel to datum plane C.
4. Datum Z (seating plane) is defined by the spherical crowns of the solder balls.
5. Parallelism measurement shall exclude any effect of mark on top surface of package.

Description: BGA

Primary dimension units are millimeters, Secondary dimension units are [inches], Weight is in grams.

Tolerances: Hole diameters ±0.03mm [±0.001"], Pitches (from true position) ±0.025mm [±0.001"], substrate thickness tolerance ±10%, all other tolerances ±0.13mm [±0.005"] unless stated otherwise. Materials and specifications are subject to change without notice.

GT-BGA-2019 Drawing	Material: Material <not specified>	STATUS: Released	SHEET: 3 OF 4	REV. A
Ironwood Electronics, Inc. Tele: (800) 404-0204 www.ironwoodelectronics.com	Finish: Weight: 159.85	ENG: S. Huang	DRAWN BY: M. Raske	SCALE: 3:1
		FILE: GT-BGA-2019 Dwg	DATE: 3/20/2015	

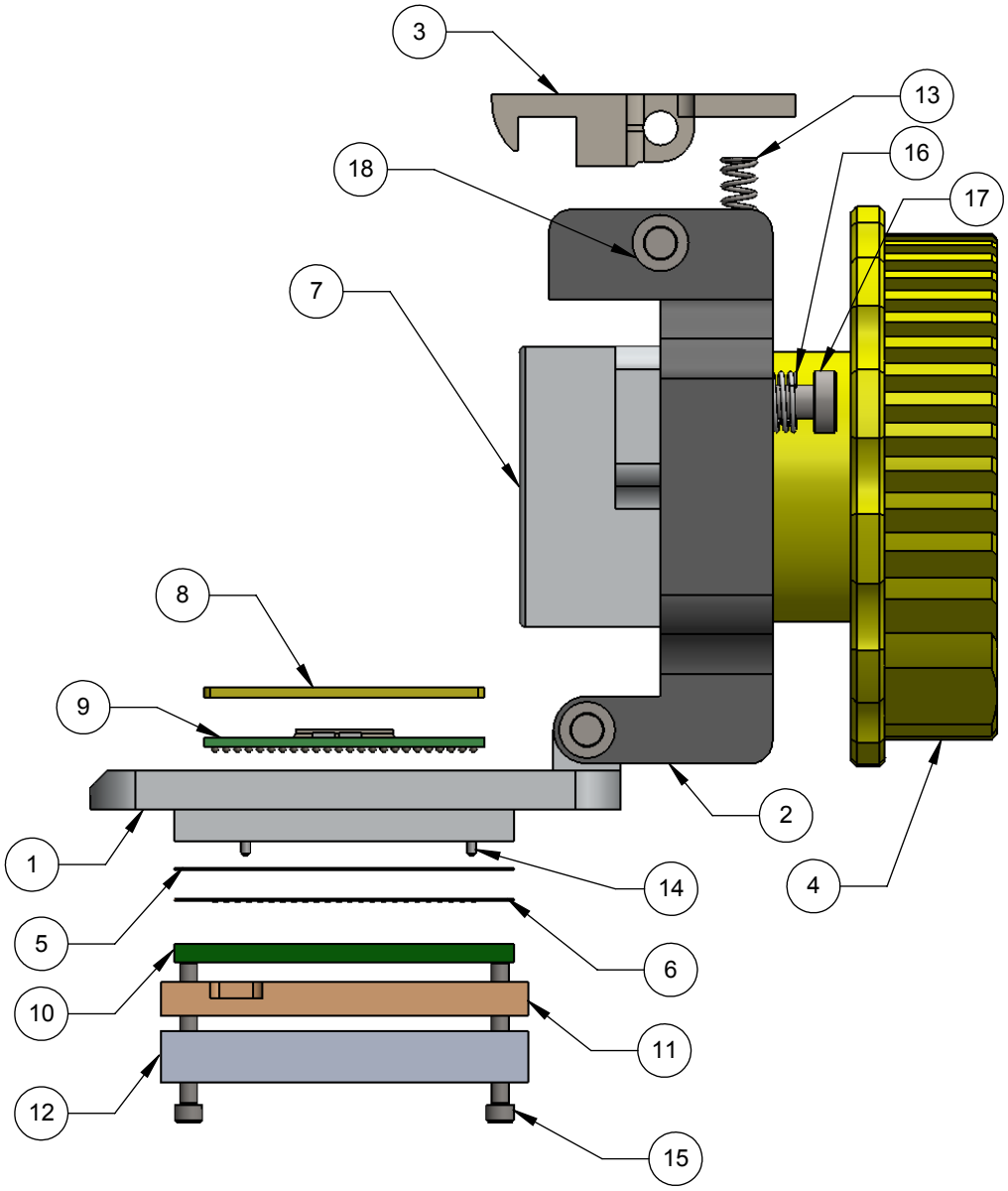

ITEM NO.	DESCRIPTION	Material
1	Clamshell Socket Base 25mm IC	7075-T6 Aluminum Alloy
2	Socket Lid	7075-T6 Aluminum Alloy
3	Latch	7075-T6 Aluminum Alloy
4	Heat sink Compression Screw M24 threads	7075-T6 Aluminum Alloy
5	Ball Guide 24x24mm 1mm pitch	Kapton Polyimide/Cirlex
6	GT Elastomer 25x25mm IC 1mm pitch 24x24 array	Conductive Elastomer
7	Clamshell Compression Plate for 25mm IC	7075-T6 Aluminum Alloy
8	IC frame for 25mm IC	Torlon 4203
9	BGA572 24x24 array 25x25 mm 1mm pitch	FR4 High temp
10	PCB BGA572 24x24 array 25x25 mm 1mm pitch	FR4
11	Custom Insualtion Plate 25x25mm IC	Ultem 1000
12	Backing Plate 25x25mm	7075-T6 Aluminum Alloy
13	Precision Compression Spring, Zinc-Plated Music Wire, 1/2" Length, .12" OD, .016" Wire	Zinc Plated Music Wire
14	Alignment Pin 1/32" dia. x 1/8" lng	Chrome Stainless Steel
15	#0-80 x 0.5, SH Cap Screw	Alloy Steel
16	Spring Clamshell lid assembly	Steel Music Wire
17	Screw, M3 x 12mm, Low Head Cap, SS	18-8 Stainless Steel
18	Hinge Pin and Snap Ring, 3mm OD, 30mm long, 1045 Stl, Blk Oxide	AISI 1045 Steel, cold drawn

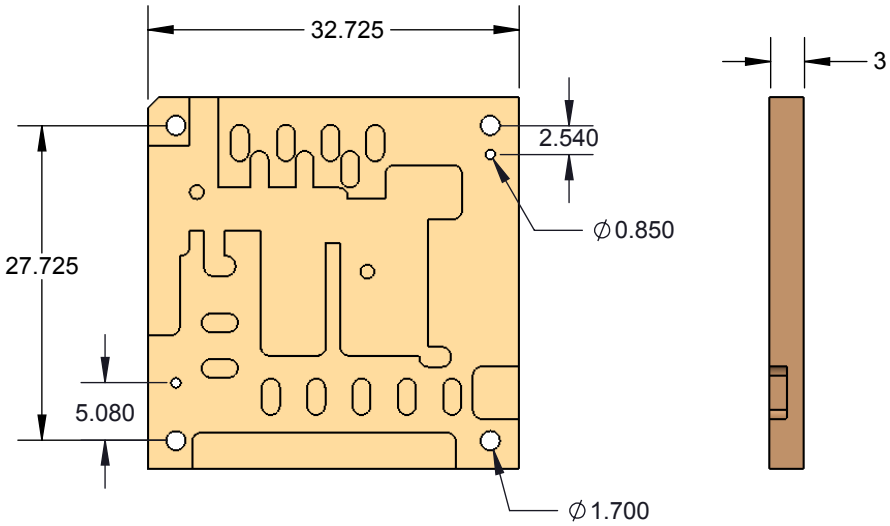

Insulation plate specification

Description: Socket Assy

Primary dimension units are millimeters, Secondary dimension units are [inches], Weight is in grams.

Tolerances: Hole diameters ±0.03mm [±0.001"], Pitches (from true position) ±0.025mm [±0.001"], substrate thickness tolerance ±10%, all other tolerances ±0.13mm [±0.005"] unless stated otherwise. Materials and specifications are subject to change without notice.

GT-BGA-2019 Drawing	Material: Material <not specified>	STATUS: Released	SHEET: 4 OF 4	REV. A
Ironwood Electronics, Inc. Tele: (800) 404-0204 www.ironwoodelectronics.com	Finish: Weight: 159.85	ENG: S. Huang	DRAWN BY: M. Raske	SCALE: 1.5:1
		FILE: GT-BGA-2019 Dwg	DATE: 3/20/2015	