SM Crystal for Bluetooth / Wireless

GSX-323

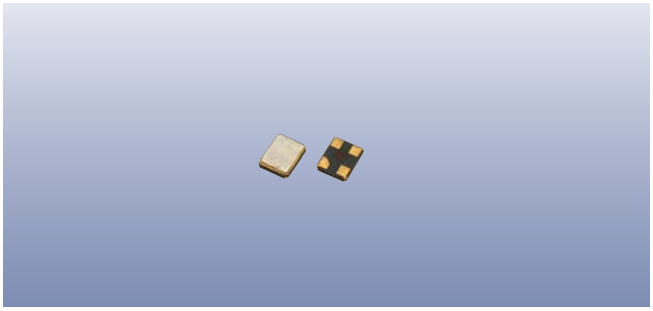

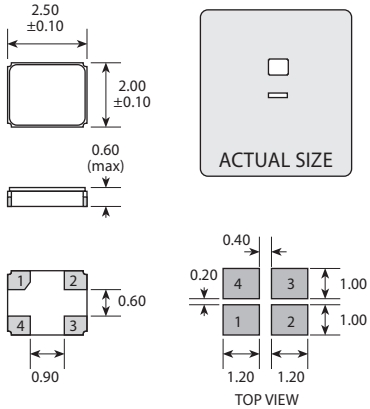

PAD	CONNECTION
1	Crystal
2	Ground & lid
3	Crystal
4	Ground & lid

Scale 4:1

Features

- **Ultra-miniature for maximum space saving**
- **Ideal for Bluetooth / Wireless applications**
- **Metal lid can be grounded to minimise EMI**
- **Seam sealed for excellent long-term stability**

Bluetooth Applications

Frequency	Specification	IC	Part No
16.0MHz	9pF, 9ppm/pF typ pullability	CSR	MA07246*
26.0MHz	9pF, 14ppm/pF typ pullability	CSR	MA07232*

* Designed for use with CSR chipset solutions. Golledge is a global supply partner for CSR

Specifications

Parameters		Product GSX-323	Option Codes
Frequency range:	16.0 ~ 48.0MHz	■	
Calibration tolerance:	±10ppm	■	1
	±15ppm	□	P
	±20ppm	□	2
	Other values (±7.5 ~ ±100ppm)	□	specify
Temperature stability:	±10ppm	■	1
	±15ppm	□	P
	±20ppm	□	2
	±30ppm	□	3
	Other values (±7.5 ~ ±100ppm)	□	specify
Operating temperature range:			
	-10 to +60°C	■	1
	-20 to +70°C	□	2
	-30 to +80°C	□	3
	Other values	□	specify
Storage temperature range:			
	-40 to +85°C	■	
Circuit condition:	8pF	□	M
	9pF	□	N
	12pF	□	B
	16pF	■	D
	Series resonant	□	S
	Other values	□	specify
Oscillation mode:	Fundamental	■	F
Equivalent series resistance:	100Ω max	■	
Ageing:	±1ppm max first year	■	
Test drive level:	10µW	■	
Soldering condition:	260°C, 10 sec x2 max	■	

■ Standard. □ Optional - Please specify required code(s) when ordering

Ordering Information

Part No, or product name + option codes + frequency
eg: **GSX-323/111NF 16.0MHz** 10/10/10/9-F
GSX-323/1P3AF 26.0MHz 10/15/30/10-F
Option code X (eg GSX-323/X) denotes a custom specification.

- ±10ppm temperature stability may not be available over -30+80°C. Check with our sales office before ordering.

Tel: **+44 1460 256 100** Fax: **+44 1460 256 101** E-mail: **sales@golledge.com** Web: **www.golledge.com**

Golledge

28 Mar 2006

Product Information

GSX-323

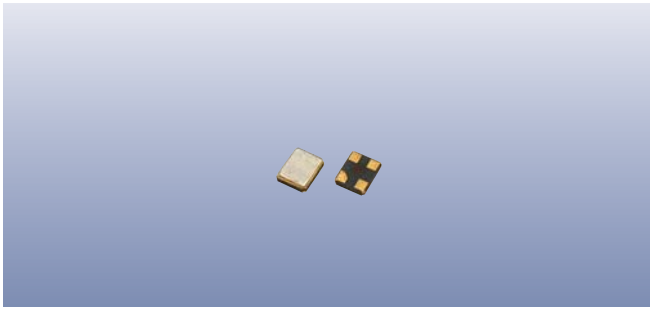

Packaging & Handling

Production quantities supplied on T & R, 1k or 2k pcs per reel.
Small quantities may be supplied on tape (no reel), or in bulk.

Marking

FREQUENCY T DC

Marking type: Laser
DC = Date code in YW, as shown below
Example: "xd" = 2006 week 30

Year	2001 2005	2002 2006	2003 2007	2004 2008
Code	X	x	X	x

Week codes:

A ~ Z: weeks 1 to 26
a ~ z: weeks 27 to 52

Tape & Reel Specification

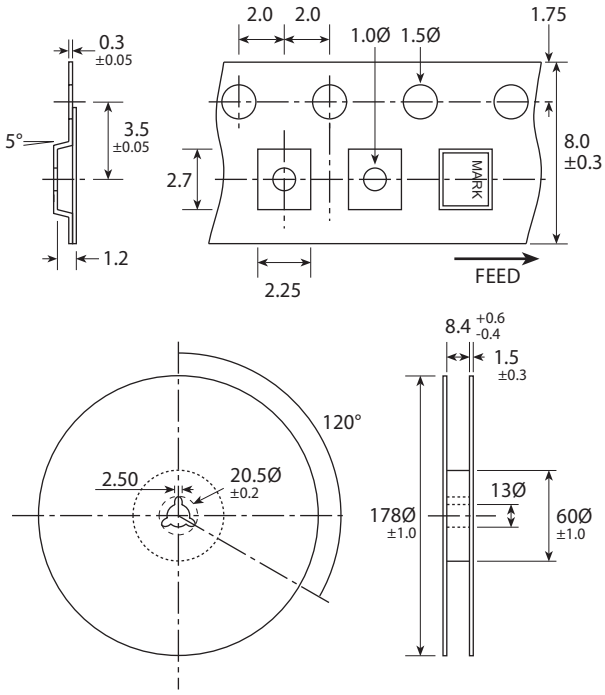

Not to scale. Dimensional tolerances ±0.1mm unless otherwise stated

Construction

- **Ceramic body with gold-plated pads**
- **Metal lid, seam sealed**

Composition

RoHS 2002/95/EC

This product is lead-free, and is fully compliant with the RoHS directive 2002/95/EC

Pb LeadFree

Soldering Profile

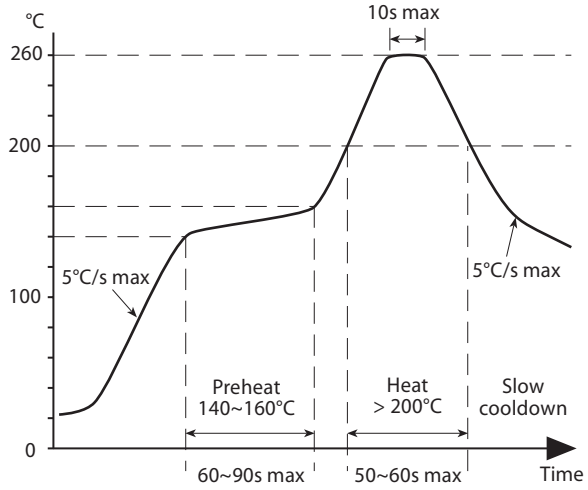

Maximum solder resistance: 260°C x 10 secs x 2.