Shen Zhen HuaXinAn Electronics Co.,Ltd

HUAAN LIMITED

SPECIFICATTON FOR APPROVAL

CUSTOMER NAME: _____

PRODUCT NAME: Surge Absorbers

HUAAN P/N : _____

CUSTOMER P/N : _____

Customer	Supplier
Manufacturing Department: _____	Manufacturing Department: Lui Wei
Quality Assurance Department:_____	Quality Assurance Department:Wei Yu
Engineering Department:_____	Engineering Department:wang qing
company seal:	company seal:

TEL : +86 - 755- 27465585 Fax : +86 - 755- 27270662
Email: sales@huaandz.com abc0734@126.com

Address:4th Floor,Building 5,Alley2,Center District 2,ZhongWu New District,XiXiang Town,BaoAn District,ShenZhen City，GuangDong Province,China

Web: www.huaandz.com

ShenZhen HuaXinAn Electronics Co.,Ltd

Surge Absorbers

GSS Series 3000A

1 Application:

Fast Delivery Time

·For instantaneous over-voltage protection to ADSL,ISDN,MODEM,FAX,TEL,Power Supplies,Alarm systems.

·For instantaneous over-voltage protection to RS485,RS232 port, CATV,video transceiver.

·For instantaneous over-voltage protection to ammeter,water meter auto admin system, etc

2 Features

·Small capacitance and excellent insulation resistance(100MΩ min).

·Small size,No polarity.No dark effect.

·Low electrode capacitance(1pF max).

·Quick response for electrostatic,surge voltage and low limiting voltage.

·Stable for repeated discharge test conditions.

·Operating temperature: -40℃～+85℃. Storage temperature: -40℃～+125℃.

3 Electrical Characteristics

Part Number	DC Spark-Over Voltage Vs(V) Nominal value（Min-Max）		Insulation Resistance		Capacitance of electrostatic	Surge current capacity 8/20us	Surge Life
			Test voltage	IR (MΩ)	1KHz-6V		
GSS-141N	140V	(98V-182V)	DC50V	>100MΩ	1pF(MAX)	3000A	1KHz-10KV Max 10/700us 6KV 150A 10times
GSS-181N	180V	(126V-234V)	DC100V				
GSS-201M	200V	(160V-240V)					
GSS-251M	250V	(200V-300V)					
GSS-301M	300V	(240V-360V)					
GSS-401M	400V	(320V-480V)	DC250V				
GSS-471M	470V	（400V-560V）					
GSS-501M	500V	(400V-600V)					
GSS-601M	600V	(480V-720V)					
GSS-102M	1000V	(800V-1200V)	DC500V				
GSS-122M	1200V	(960V-1440V)					
GSS-152M	1500V	(1200V-1800V)					

4 Dimension(Diameter 3.1mm , Length 6.7mm)

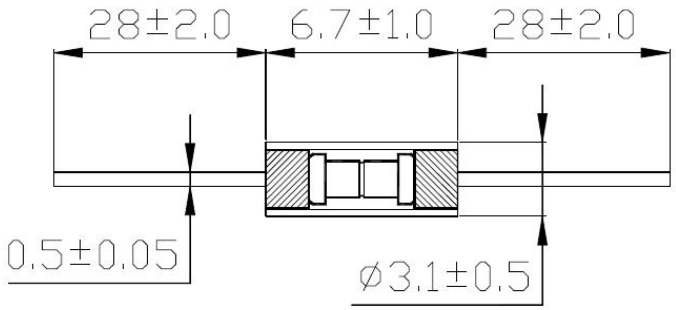



5 Marking of colour code：

Fast Delivery Time

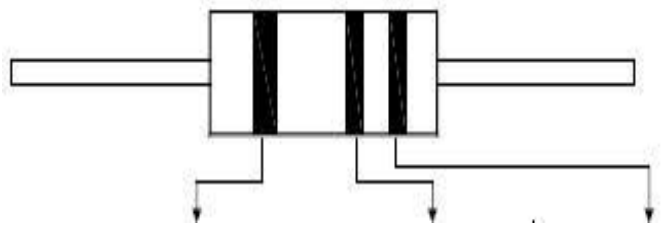

Part Number	Colour Code 1	Colour Code 2	Colour Code 3
GSS-301M	Orange	Red	Red
GSS-501M	Green	----	---

6 Part Number System（型号构成）：

Example **GSS — 301 — M — A**

① ② ③ ④

No	Symbols Explain
①Series Name	GSS series(Glass Tube Dimension :Diameter: φ3.1mm , Length: 6.7mm
②Nominal DC spark over voltage	The symbol denoting nominal DC spark over voltage shall be expressed by three numerals.The first and second numerals shall represent the significant figures of nominal DC spark over voltage in volts(V),and the third numerals shall represent the number of zeros ,following the significant figures. Example) 301——$30\times10^{1}=300$
③Tolerances of DC Spark over Voltage	Tolerances: L — ±15% ； M — ±20% ； N — ±30% ；
④Taping Form	Symbol Form: A — Axial Taping

7 Initial Characteristices 基本特性 ：

项目 Test Item	测试条件 Test Method	规格值 Specification
直流放电电压 DC Spark-Over VoltageVs(V)	逐渐地增加测量使用直流电压，即可知其开始电压，测定电流为一毫安与测定时间最大为一秒 (1sec).(1mA) (Add and measure the DC Voltage gradually Maxto get the discharge threshold voltage. The measuring current is 1mA/1 second max.)	依型号而定 (It depands on each part number.)
内绝缘电阻 Insulation Resistance	在规定的设定直流电压下，跨在两端引线，即测量其内绝缘电阻值.(Measure the insulation resistance of two end of leadwire under the specified DC voltage.)	100MΩ或大于 100MΩ (100MΩ min.)
静电电容 Capacitance C(pF)	使用频率 1KHZ 与小于或等于 6V 直流电压之电源，即测量其静电电容量 Measure the Electrostatic Capacitance under the test condition of 1KHz,DC 6V(max).	1PF 或小于 1PF (1pF max.)

8 Enviromental Characteristics(环境试验） ：

试验项目 Test Item	试验方法 Test Method	性能 Characteristics
耐寒性(依据 JIS C0020) Cold Resistance JIS C0020	放置于-40℃±3℃之环境中 1000 小時后,取出置于常温常湿中 4 小時后,检测直流开始放电电压，绝缘阻抗，静电容量及检查外观. After -40±3℃(1000hrs) / room temp.,normal humidity(4 hrs) cycle,measure the properties.	满足各个特性之规格值 Within standard mentioned in Initial Characteristics.
耐热性(依据 JIS C0021) Heat Resistance JIS C0021	放置于 125℃±2℃之环境中 1000 小時后,取出置于常温常湿中 4 小時后,检测直流开始放电电压，绝缘阻抗，静电容量及检查外观. After 125±2℃(1000hrs) / room temp.,normal humidity(4 hrs) cycle,measure the properties.	满足各个特性之规格值 Within standard mentioned in Initial Characteristics.
耐湿性(依据 JIS C0022) Humidity Resistance JIS C0020	放置于 85℃±2℃ RH85%之环境中 1000 小時后,取出置于常温常湿中 4 小時后,检测直流开始放电电压，绝缘阻抗，静电容量及检查外观。 After 85±2℃, 85% RH (1000hrs)/room temp., normal humidity (4hrs)cycle, measure the properties.	满足各个特性之规格值 Within standard mentioned in Initial Characteristics.
温度周期(依据 JISC0025) Temperature Cycle Test (JIS C0025)	-40℃±3℃(30 分)~(常温 3 分)~125℃±2℃(30 分)为 1 周期,重复 25 次后,取出置于常温常湿中 4 小時后,检测直流开始放电电压，绝缘阻抗，静电容量及检查外观. 25 times repetition of cycle -40±3℃ (30 Min.),roon temp., (4 Min.),125±2℃(30 Min.),room temp., normal humidity(4hrs) .	满足各个特性之规格值 Within standard mentioned in Initial Characteristics.

9 Mechanical Characteristics机构特性 ：

试验项目 Test Item	试验方法 Test Method	结果 Result
拉力强度(依据 JIS C0051) Pull Strength (JIS C0051)	施加 2.5Kgf 之荷重于导线约 30 秒钟后,检测直流开始放电电压,绝缘阻抗,靜电容量及检查外观. (Apply 2.5 kgs load approximately 30 seconds, then check for pull-out and breaking of the lead wire.)	满足各个特性之规格值 Within standard mentioned in Initial Characteristics.
弯曲強度 (依据 JIS C0051) Flexure Strength(JIS C0051)	距离导线熔接点根部 3mm 处,使用曲率半径 0.75~0.80mm 之治具,与轴方向垂直角度,荷 0.25Kgf 弯曲后回复原状,反复 2 次后,检测直流开始放电电压,绝缘阻抗,靜电容量及检查外观.(Bend the lead wire, with jig which radius is 0.75~0.8mm, at the point of 3mm from the body, under 0.25 kgs load applied at the right angle the direction of the amis and get the bent lead wire back to its original poing after the procedure was repeated 2 times.)	满足各个特性之规格值 Within standard mentioned in Initial Characteristics.

10 Solder Characteristics 焊锡特性 ：

试验项目 Test Item	试验方法 Test Method	结果 Result
焊锡附着性 (依据 JIS C0050 4.6 项) Solderability (JIS C0050,4.6)	将沾过助焊剂之导线，自距离导线熔接点根部 3mm 处起，浸于 265±5℃之焊锡液中 5 秒钟后，将导线之助焊剂洗净后，检查焊锡附着情形.(Apply flux and immerse in molten solder, up to the point of 3mm from the body,for 5 sec. (265℃±5℃). Wash the leadwire and check for soldering adhesion.)	導線須均勻附著 90%上. (Lead wire is evenly covered by solder over 90%.)
焊锡耐热性 (依据 JISC0051) Solder Heat (JIS C0051)	将沾过助焊剂之导线，自距离导线熔接点根部 2mm 处起，浸于 265±5℃之焊锡液中 10 秒钟后,检测直流开始放电电压,绝缘阻抗,靜电容量及检查外观. (Lead wire is dipped up to the point of 2mm from the body, into 265℃±5℃ solder.for 10±1 sec.And measure the properties.)	满足各個特性之规格值 Within standard mentioned in Initial Characteristics.

11 Surge Characteristics 突波特性 ：

试验项目 Test Item	试验方法 Test Method	结果 Result
突波寿命(GSS) Life(GSS)	将(10X700)μsec-6KV 突波,变换极向各 5 次,(100X1000)μsec-1KV 之突波,变换极向各 5 次,每隔 30 秒施加于试料 24 次后,检测直流开始放电电压,绝缘阻抗,靜电容量及检查外观 (Apply a standard impulse voltage (10X700)μsec)of 1KV for 5 times with intervals of 30 sec., and then change the polarity of the surge and apply a impulse again. And similarly, apply a impulse voltage((100X1000)μsec) of 1KV. Total apply 24 times. Then measure DC spark-over voltage, IR & Capacitance.)	直流开始放电电压 GSS △Vs/Vs≦30% (DC sparkover volatage GSS: △Vs/Vs≦30%)
突波寿命(GSS) Life(GSS)	每间隔 10 秒施加 10KV 之电压于 1500PF 之电容器通过试料,做 200 次(Apply 10 KV voltage charged in 1500pF condenser and apply the current to the specimen,200 times at 10 seconds of intervals.)	绝缘阻抗和靜电电容:须满足规定值 外观:无影响使用之显著缺陷 (Insulation Resistance & Capacitance to meet the specified value.Appearance: No cracks or failures .)

12 Taping 包装 ：

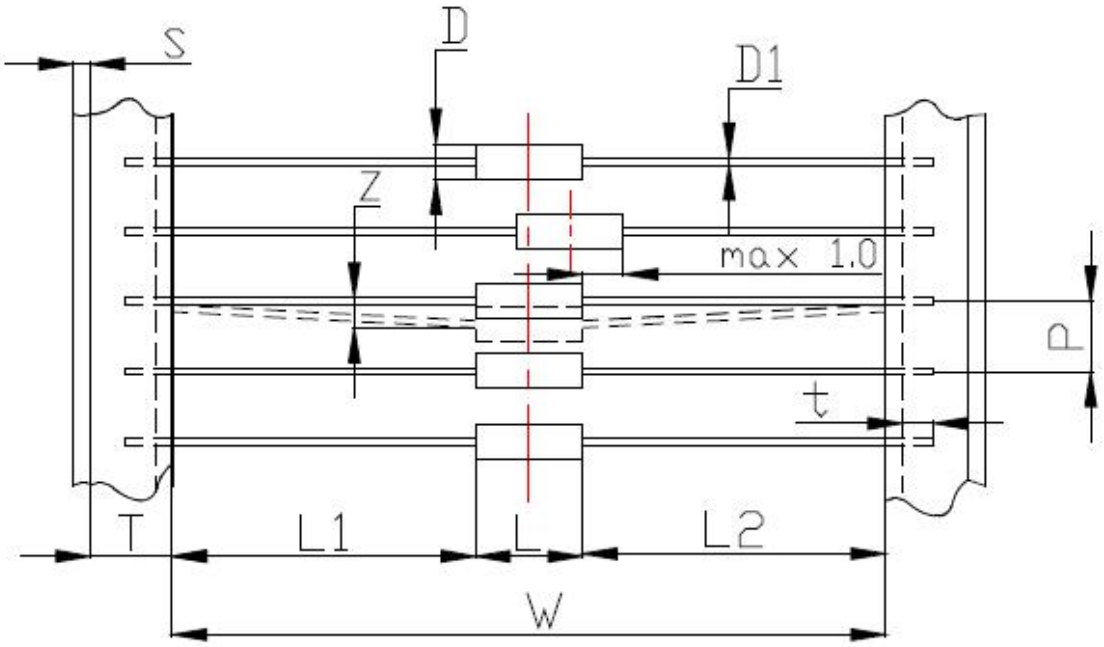

Mark 符号	W	P	T	Z	L1-L2	S	t	L	D1	D
Dimension(mm)	52±2.0	5.0±0.5	6.0±1.0	1.2 max	1.0 max	0.8 max	3.2 max	6.7±1.0	Φ0.5	Φ3.1±0.5

13 Package 装箱 ：

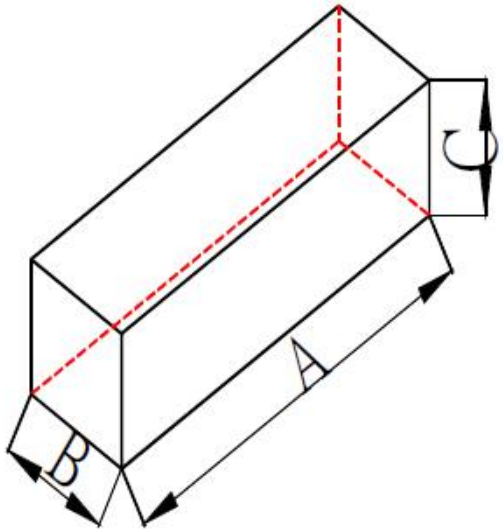

Item 项目	长 Length	宽 Width	高 Height	数量 Quantity
	A=255mm	**B=75mm**	**C=68mm**	**1500pcs**