CIC, Class D Hybrid

GS3024A - DATA SHEET

FEATURES

- **small outline for CIC applications**
- **designed to drive class D integrated receivers**
- **on chip voltage regulator for improved end of battery life operation**
- **adjustable symmetrical peak clipper for MPO control**
- **low current drain (150 μA typical)**

STANDARD PACKAGING

• Hybrid Typical Dimensions

0.145 in. x 0.085 in. x 0.065 in.

(3.68 mm x 2.16 mm x 1.65 mm)

DESCRIPTION

The GS3024A is a Gennum proprietary hybrid for CIC applications. It incorporates a newly designed integrated circuit which offers optimum performance in class D receiver applications.

The system consists of a voltage regulator, a single low noise inverting preamplifier and a mid supply referenced output stage. The voltage regulator provides a clean DC voltage for the microphone and preamplifier, so that at end of battery life conditions when the output impedance of the battery is high, the system maintains stable operation. The preamplifier and output stage have been optimally compensated to minimize aliasing effects normally associated with class D operation. The two stages have been DC coupled to reduce the external components required, thereby minimizing the hybrid footprint.

The hybrid incorporates a decoupling capacitor for the regulator as well as input and output coupling capacitors for the microphone and receiver. In a minimum parts configuration, a microphone, receiver and gain set resistor, need to be added to the hybrid for a fully functional hearing instrument. Should the application require the Maximum Power Output (MPO) to be adjusted, a potentiometer can be added from pad 6 of the hybrid to ground.

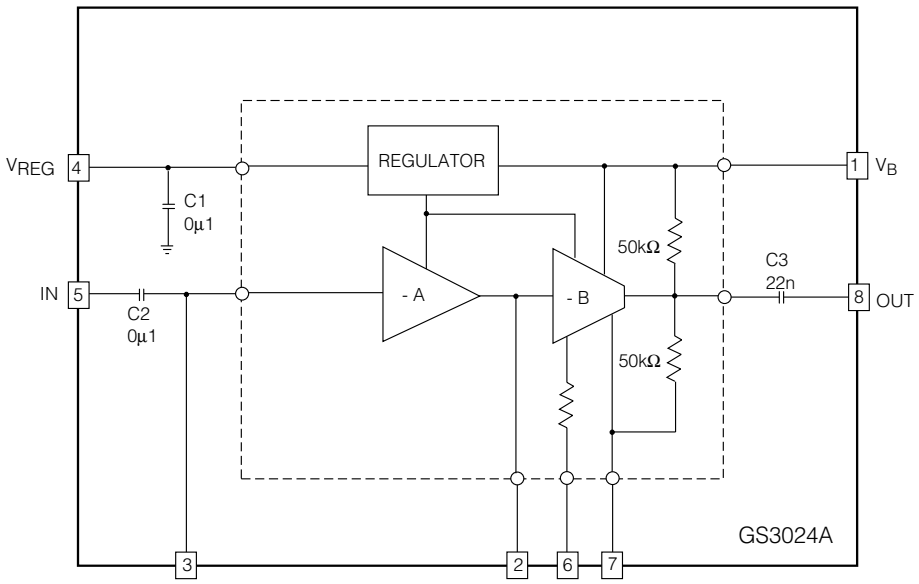

All resistors in ohms, all capacitors in farads unless otherwise stated.

BLOCK DIAGRAM

Revision Date: May 1998

Document No. 521 - 24 - 03

GENNUM CORPORATION P.O. Box 489, Stn. A, Burlington, Ontario, Canada L7R 3Y3 tel. +1 (905) 632-2996
Web Site: www.gennum.com E-mail: hipinfo@gennum.com

ABSOLUTE MAXIMUM RATINGS

PARAMETER	VALUE & UNITS
Supply Voltage	3 V DC
Power Dissipation	25 mW
Operating Temperature	-10 to + 40 ºC
Storage Temperature	-20 to +70 ºC

CAUTION
CLASS 1 ESD SENSITIVITY

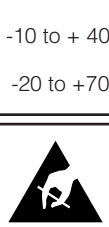

PIN CONNECTION

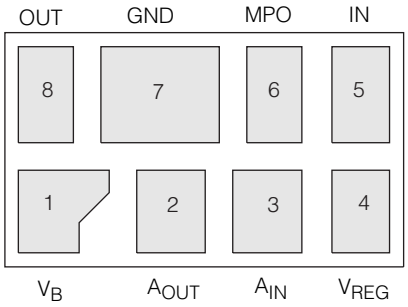

ELECTRICAL CHARACTERISTICS

Conditions: Supply Voltage V_B = 1.3VDC, Temperature 25 ºC, Frequency = 1 kHz.

PARAMETER	SYMBOL	CONDITION	MIN	TYP	MAX	UNITS
Amplifier Current	I_{AMP}		80	150	220	µA
Regulator Voltage	V_{REG}		0.87	0.92	0.97	V
Regulator Power Supply Rejection	P_{SRR}		-	63	-	dB
Input Referred Noise	IRN	NFB at 200 Hz to 10 kHz	-	2	-	µVRMS
STAGE A						
Input Bias Voltage	V_{BIAS}		500	570	630	mV
Input Bias Current	I_{BIAS}		-25	0	25	nA
Output Voltage Swing Low	V_{OL}		200	250	-	mV
Open Loop Voltage Gain	A_{OL}	At DC	46	53	-	dB
STAGE B						
Maximum Output Level	MPO	V_{IN} = -50 dBV	-14.5	-12.5	-10.5	dBV
MPO Range	ΔMPO	V_{IN} = -50 dBV, R_{MPO} = 50 kΩ	14	16	18	dB
Output Impedance	R_{OUT}		20	25	30	kΩ
SYSTEM						
AC Voltage Gain	GAIN	V_{IN} = -66 dBV	40	42	44	dB
Change in Gain	ΔGAIN	RMPO = 100 kΩ V_{IN} = -78 dBV	-	0	2.5	dB

All conditions and parameters remain as shown in test circuit unless stated in "conditions " column.

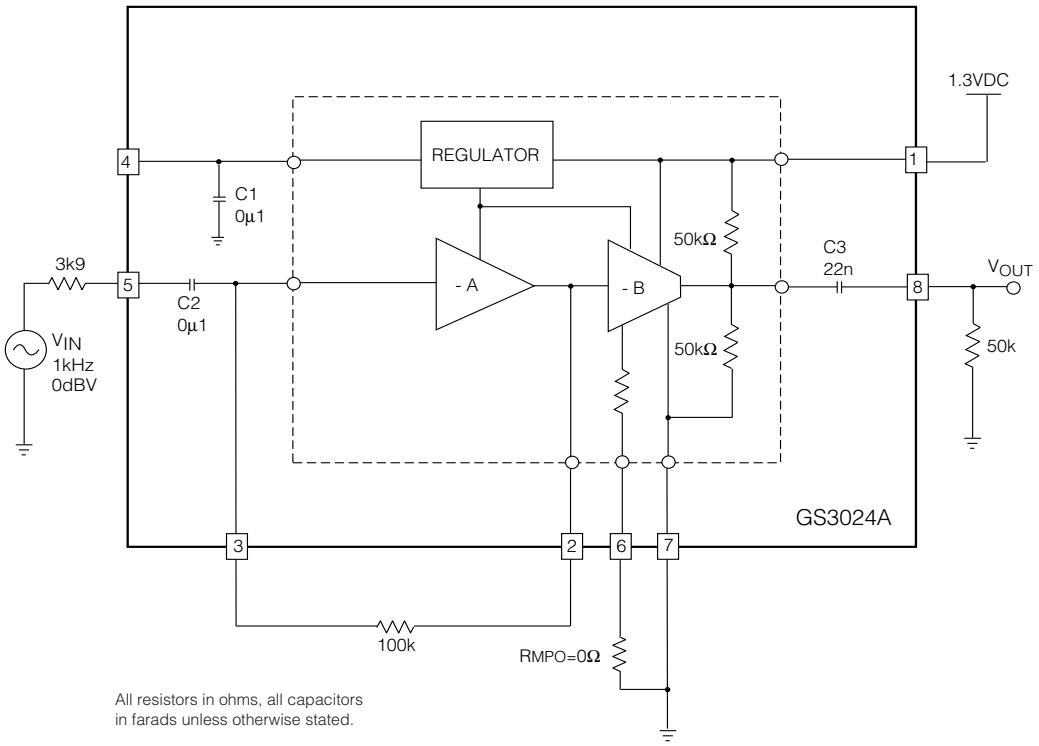

Fig. 1 Production Test Circuit

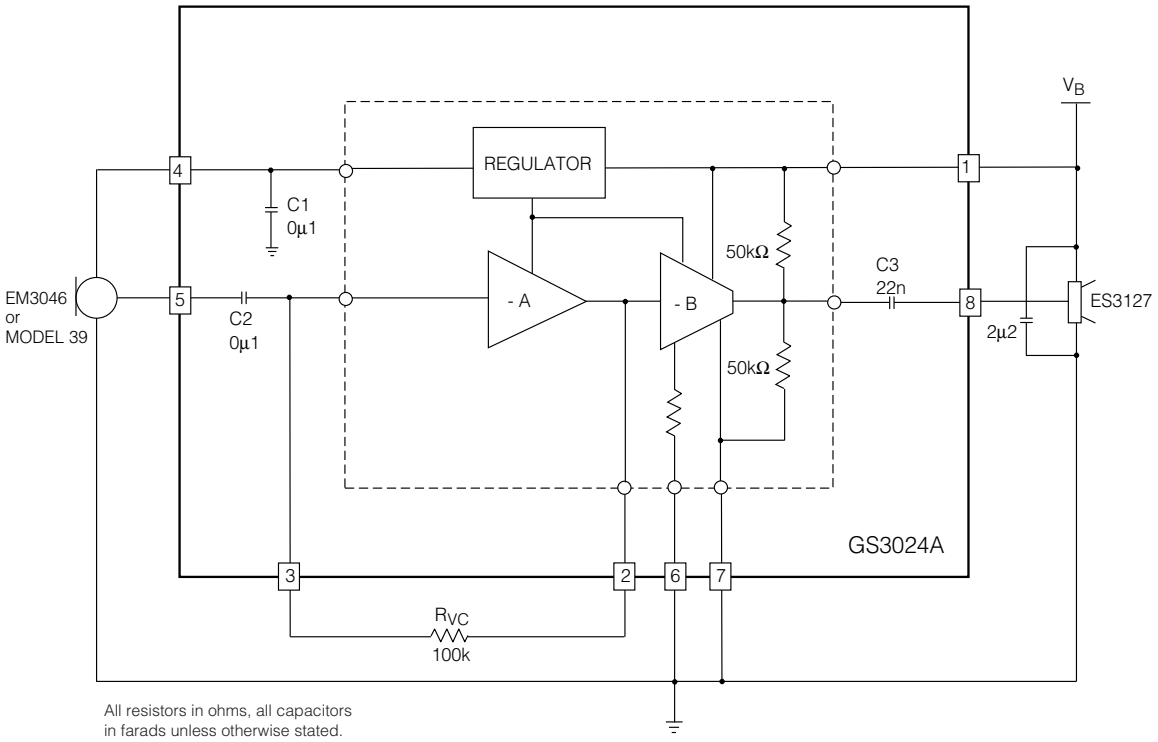

Fig. 2 Typical Hearing Instrument Application

(Minimum Parts Configuration)

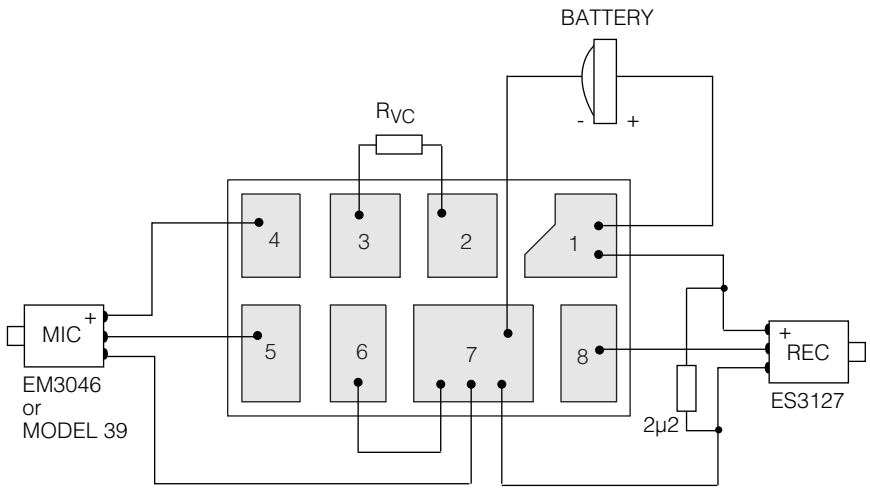

Fig. 3 Typical Instrument Assembly Diagram
(Minimum Parts Configuration)

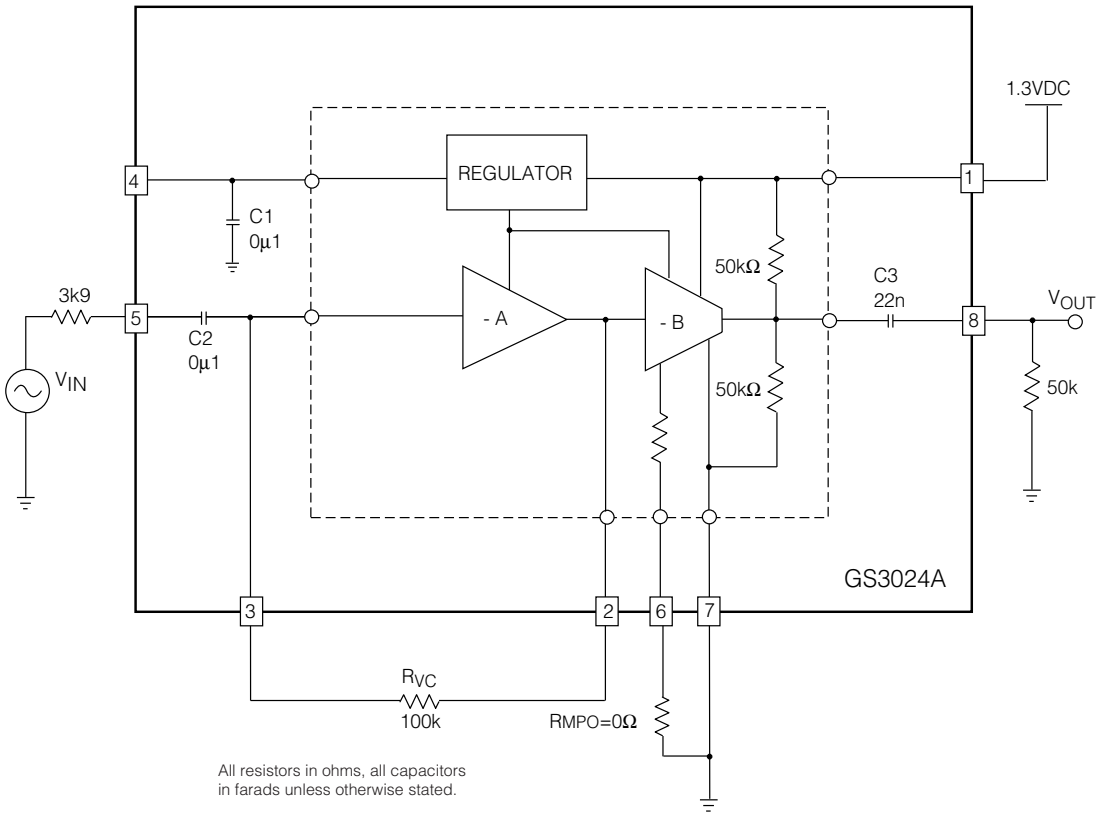

Fig. 4 Characterization Circuit
(Used to generate typical curves)

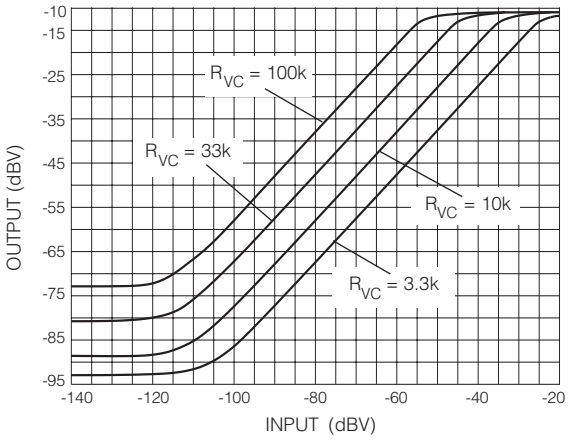

Fig. 5 I/O for Various R_{VC} Settings

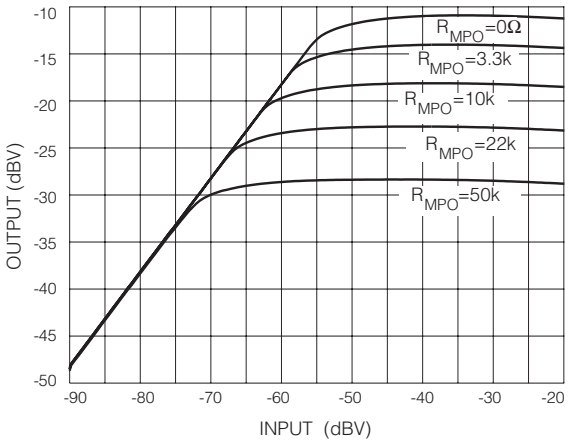

Fig. 6 I/O for Various R_{MPO} Settings

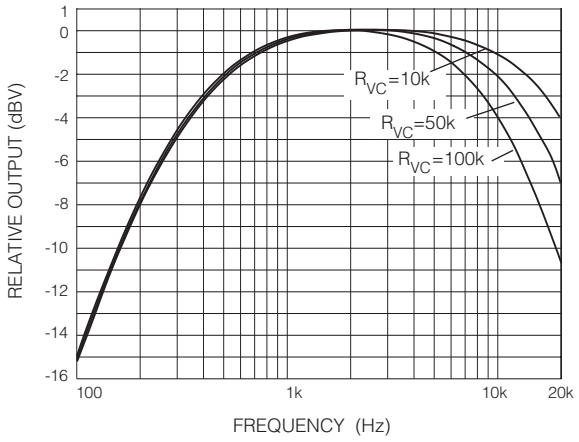

Fig. 7 Frequency Response for Various R_{VC} Values

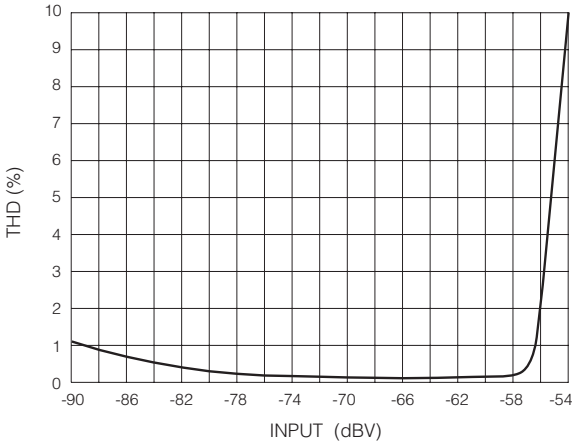

Fig. 8 Distortion vs Input Level (R_{VC} = 100 kΩ)

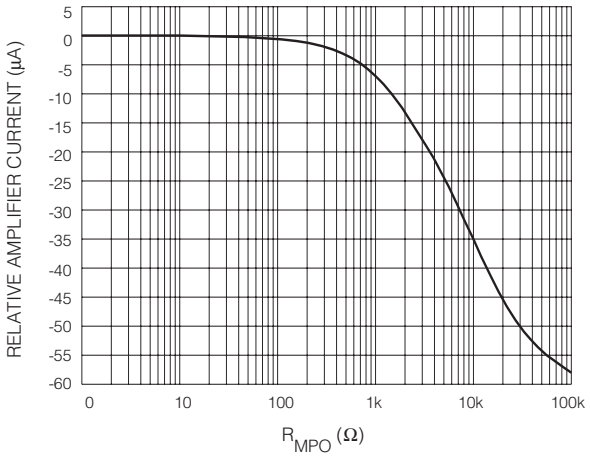

Fig. 9 Quiescent Current vs MPO Resistance

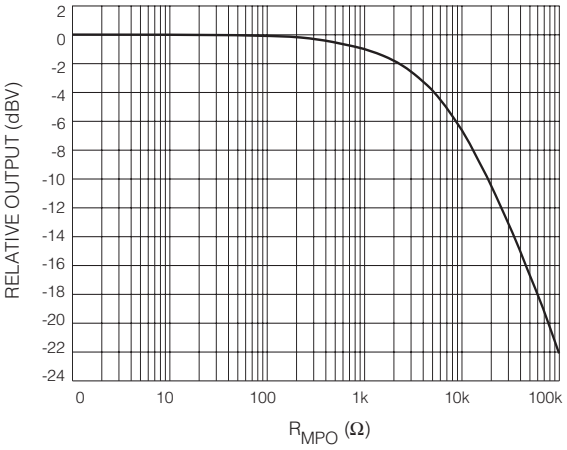

Fig. 10 Output vs MPO Resistance

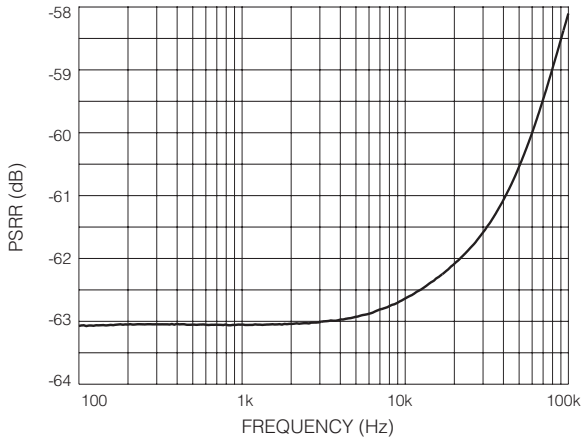

Fig. 11 Regulator Power Supply Rejection Ratio

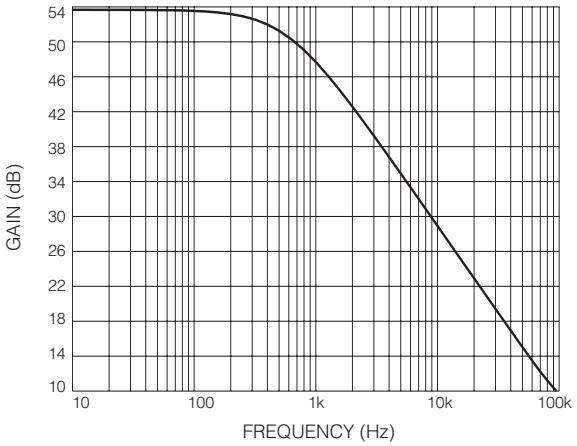

Fig. 12 Preamplifier A Open Loop Frequency Response

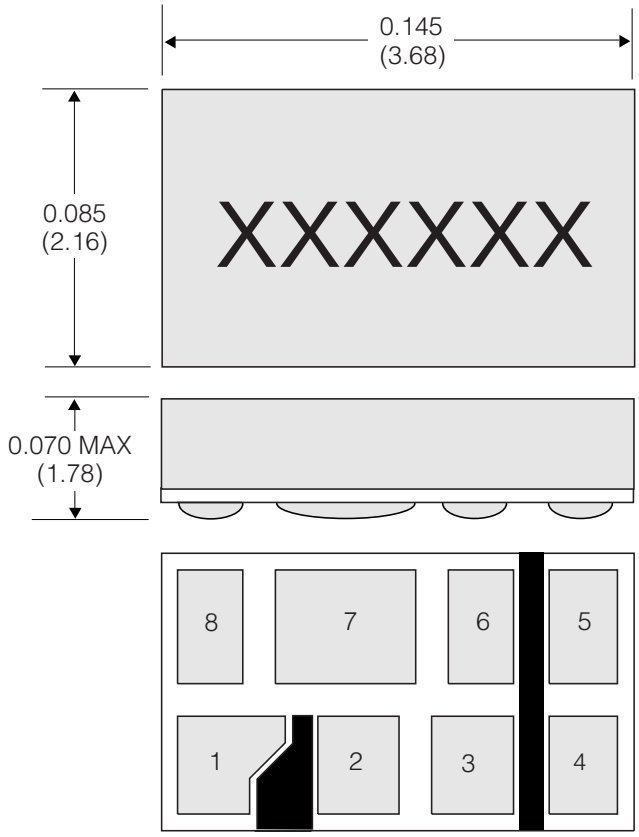

Dimensioning units are inches.
Dimensions shown in parenthesis are in millimetres,
converted from inches and include minor round off errors.
1.0000 inches = 25.400mm
Minimum Pad size 0.021 x 0.030 (0.53 x 0.76)
Dimension tolerances ±0.003 (±0.08) unless otherwise stated.
Pad numbers and capacitor numbers for illustration only.
This hybrid is designed for point to point manual soldering.

Fig. 13 Hybrid Layout and Dimensions

DOCUMENT IDENTIFICATION: DATA SHEET
The product is in production. Gennum reserves the right to make changes at any time to improve reliability, function or design, in order to provide the best product possible.

REVISION NOTES:

Updated to Data sheet

Gennum Corporation assumes no responsibility for the use of any circuits described herein and makes no representations that they are free from patent infringement.
© Copyright January 1995 Gennum Corporation. All rights reserved. Printed in Canada.