Green-Mode PWM Controller with Integrated Protections

Features

- Current mode PWM
- Very low startup current
- Under-voltage lockout (UVLO)
- Non-audible-noise green-mode control
- Programmable switching frequency
- Cycle-by-cycle peak current limiting
- Internal leading-edge blanking
- Internal slope compensation
- Internal 4ms soft start (Fs=65KHz)
- VCC over voltage clamp
- Gate output voltage clamp
- Soft driving for reducing EMI
- Over-voltage protection (OVP) on VCC Pin
- Over-load protection (OLP)
- Over-current protection (OCP) on CS Pin
- 300mA driving capability
- Meet the standard of Green Partner, SONY SS-00259

Applications

- Switching AC/DC power adapter and battery charger
- Open-frame SMPS

Description

The GR8835A is a highly-integrated, low startup current, current mode PWM controller with Green-mode function. This function enables the power supply to easily meet even the strictest power conservation requirements. The integrated functions also include the leading-edge blanking of the current sensing, internal slope compensation, cycle-by-cycle peak current limiting and soft start. OLP, OCP and OVP provide protection performance for fault conditions. To protect the external power MOSFET from being damaged by supply over voltage, the GR8835A gate voltage is clamped about 13V.

The GR8835A improves the performance and reduces the cost of power supplies. It is with both 8-pin DIP and 6-pin SOT-26 package.

Ordering and Marking Information

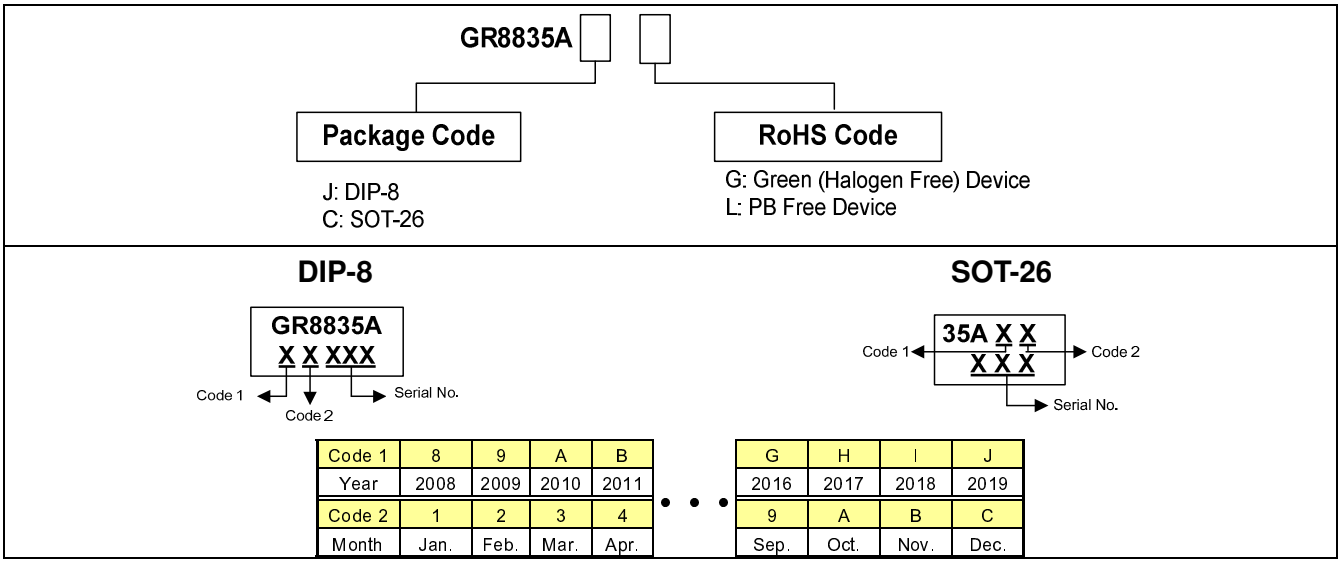

Code 1	8	9	A	B	G	H	I	J
Year	2008	2009	2010	2011	2016	2017	2018	2019
Code 2	1	2	3	4	9	A	B	C
Month	Jan.	Feb.	Mar.	Apr.	Sep.	Oct.	Nov.	Dec.

Grenergy OPTO Inc. reserves the right to make changes to improve reliability or manufacture ability without notice, and advise customers to obtain the latest version of relevant information to verify before placing orders.

Pin Configuration

DIP- 8 (TOP VIEW)

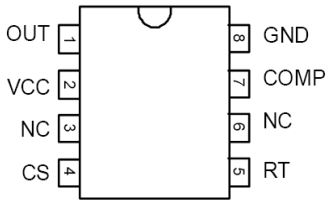

SOT- 26 (TOP VIEW)

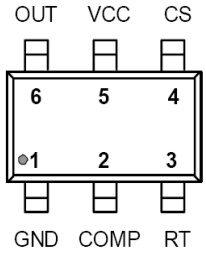

Pin Description

Pin No.	Name	Function
1	GND	Ground
2	COMP	Voltage feedback pin, by connecting a photo-coupler to control the duty cycle
3	RT	Connecting a resistor to ground, this resistor determine the switching frequency
4	CS	Current sense pin, connect to sense the MOSFET current
5	VCC	Power supply pin
6	OUT	The output driver for driving the external MOSFET

Note: Pin No. is only for SOT-26 package.

Absolute Maximum Ratings

Supply Voltage VCC ---------- 32V

COMP, RT, CS ---------- - 0.3 ~ 7V

Junction temperature ---------- 150℃

Operating ambient temperature ---------- - 40℃ ~ 85℃

Storage temperature range ---------- - 65℃ ~ 150 ℃

SOT-26 package thermal resistance ---------- 250℃/W

Power dissipation (SOT-26, at Ambient Temperature = 85℃) ---------- 250mW

Power dissipation (DIP-8, at Ambient Temperature = 85℃) ---------- 650mW

Lead temperature (All Pb Free Packages, Soldering, 10 sec) ---------- 260℃

ESD voltage protection, human body model ---------- 3KV

ESD voltage protection, machine model ---------- 250V

Recommended Operating Conditions

Item	Min.	Max.	Unit
Supply voltage VCC	11	25	V
Switching Frequency	50	130	KHz

Block Diagram

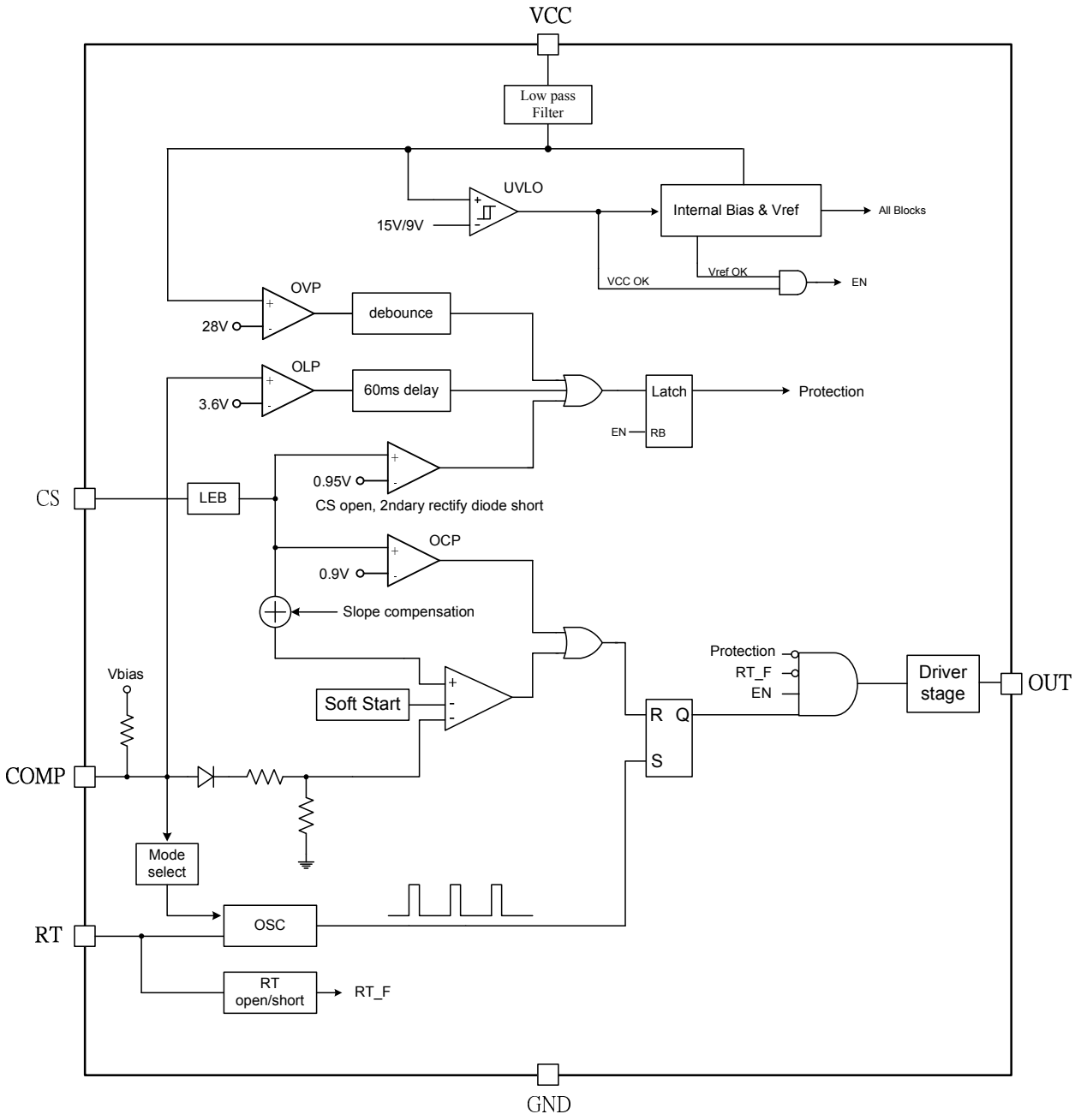

Electrical Characteristics (TA = +25℃ unless otherwise stated, Vcc = 15.0V)

Parameter	Pin	Min.	Typ.	Max.	Unit
SUPPLY VOLTAGE					
Startup current	5		8	20	uA
Operating current (with 1nF load on OUT pin), Vcomp = 0V	5		2.0	3.0	mA
Operating current (with 1nF load on OUT pin), Vcomp = 2.5V	5		2.5		mA
Operating current (with 1nF load on OUT pin), protection tripped (OLP, OVP)	5		0.5		mA
UVLO(off)	5	8.0	9.0	10.0	V
UVLO(on)	5	14.0	15.0	16.5	V
OVP level on VCC pin	5	26.5	28	29.5	V
VOLTAGE FEEDBACK					
Short circuit current, Vcomp = 0V	2		1.5	2.2	mA
Open loop voltage, COMP pin open	2		5.4		V
Green-mode threshold voltage	2		1.65		V
CURRENT SENSING					
Maximum input voltage, Vcs (off)	4	0.85	0.9	0.95	V
Leading edge blanking time	4		350		nS
Input impedance	4	1			MΩ
Delay to output	4		100		nS
OSCILLATOR					
Frequency (RT = 100KΩ)	3	60	65	70	KHz
Green mode frequency (RT = 100KΩ)	3		20		KHz
Temp. stability (- 40℃ ~ 110℃)	3			3	%
Voltage stability (Vcc = 11V ~ 25V)	3			3	%
GATE DRIVER OUTPUT					
Output low level, VCC = 15V, Io = 20mA	6			1	V
Output high level, VCC = 15V, Io = 20mA	6	8			V
Rising time, load capacitance = 1000pF	6		350		nS
Falling time, load capacitance = 1000pF	6		80	110	nS
VGATE-clamp (VCC = 25V)	6		13		V
OLP					
OLP trip level, Vcomp (OLP)	-		3.6		V
OLP delay time (note), Fs = 65KHz	-		60		mS

Note: Pin No. is only for SOT-26 package.

Typical Performance Characteristics

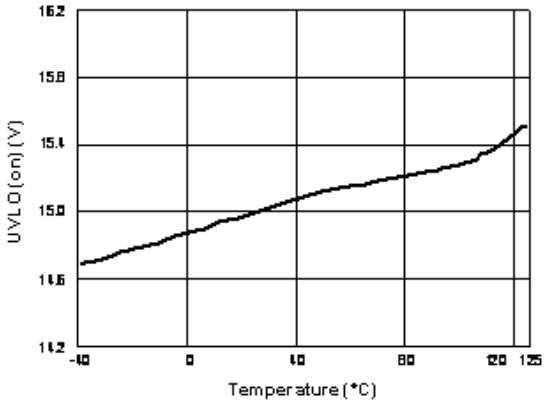

Fig. 1 UVLO(on) vs. Temperature

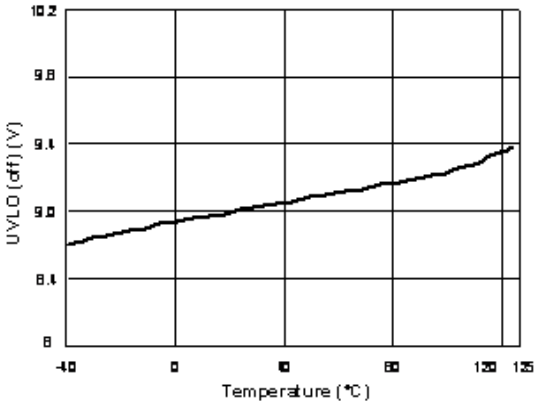

Fig. 2 UVLO(off) vs. Temperature

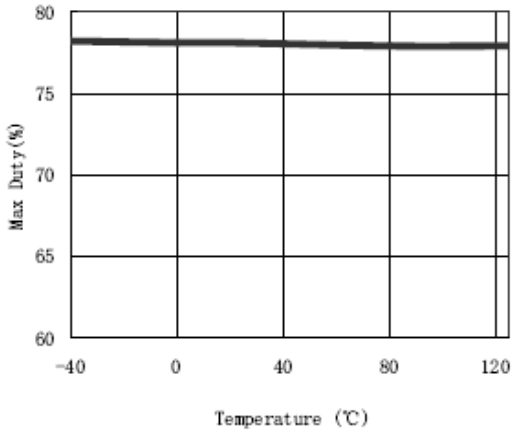

Fig.3 Max Duty vs.Temperature

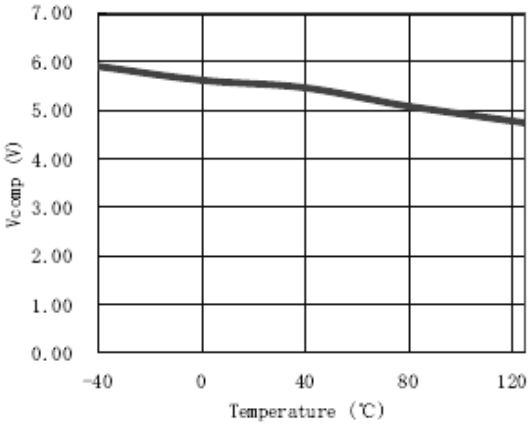

Fig.4 Vcomp open loop voltage vs. Temperature

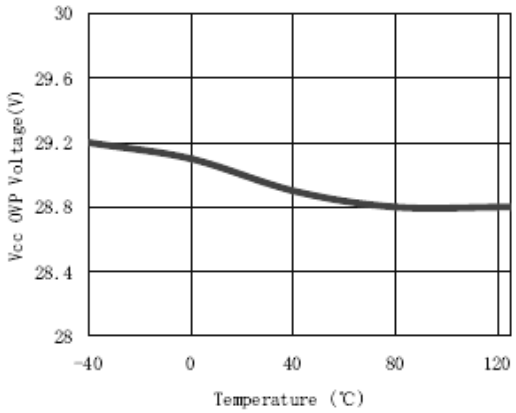

Fig.5 Vcc OVP Voltage vs.Temperature

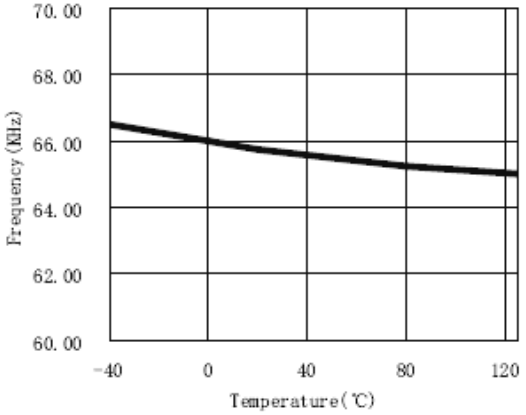

Fig.6 Frequency vs. Temperature

Typical Performance Characteristics (Cont.)

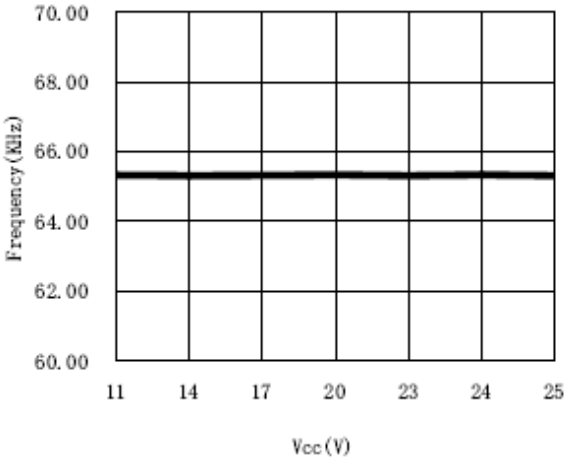

Fig.7 Frequency vs. Vcc

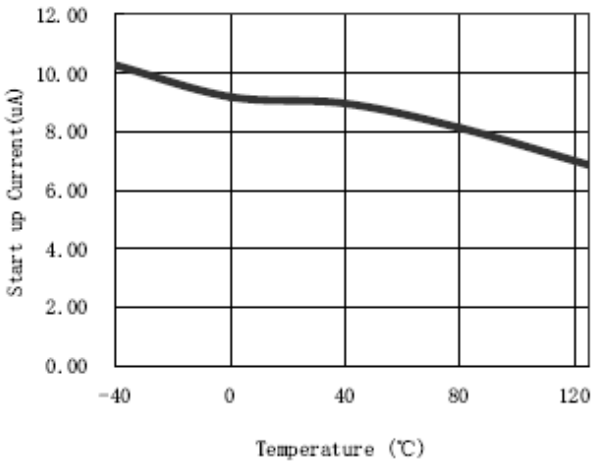

Fig.8 Start up Current vs. Temperature

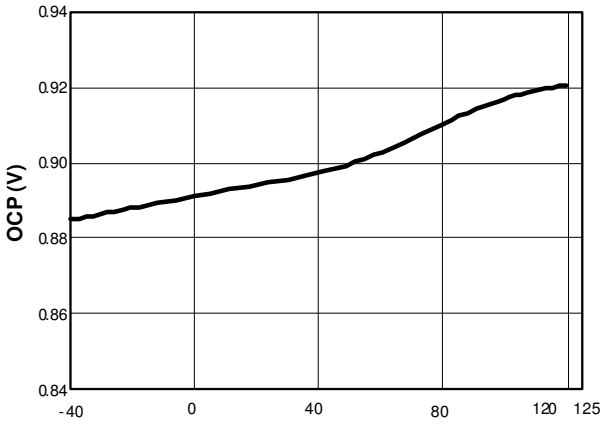

Fig. 9 OCP (V) vs. Temperature

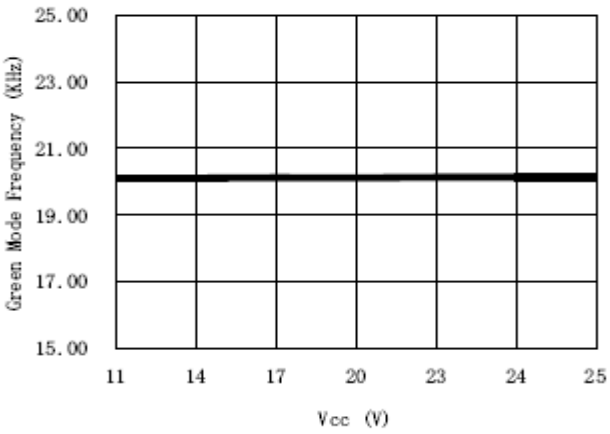

Fig.10 Green Mode Frequency vs. Vcc

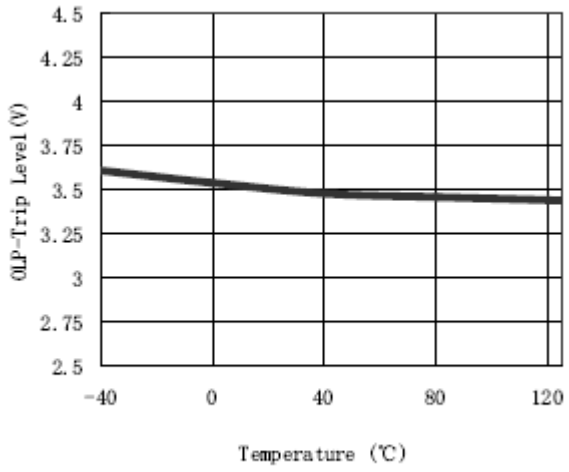

Fig.11 OLP-Trip Level vs. Temperature

Application Information

Start-up Current

The typical start-up current is 8uA. Very low start-up current allows the PWM controller to increase the value of start-up resistor and then reduce the power dissipation on it.

Under-voltage Lockout (UVLO)

A hysteresis UVLO comparator is implemented in GR8835A, then the turn-on and turn-off thresholds level are fixed at 15V and 9V respectively. This hysteresis shown in Fig.13 ensures that the start-up capacitor will be adequate to supply the chip during start-up.

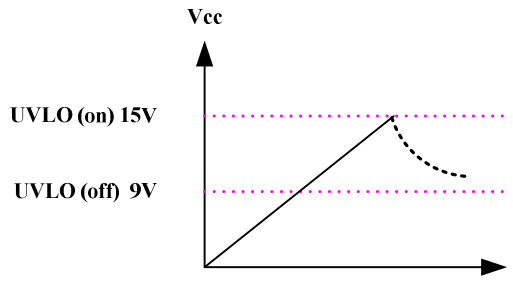

Fig.13

Soft Start

During initial power on, the GR8835A provides soft start function. It effectively suppresses the start up peak current to reduce the power MOSFET drain voltage especially at high line.

Oscillator

The maximum duty-cycle of internal oscillator is limited about 75% to avoid the transformer saturation. The frequency of the oscillator is decided by an external resistor connected from RT pin to ground.

Fosc= 6500KHz/R (Kohm)

Where R is the resistor connected at RT pin. A 100Kohm resistor results in 65KHz switching frequency. The recommended range of oscillation frequency is 50 KHz~130 KHz.

Green-Mode Operation

When the load decreases to an extent, the frequency of the controller will decrease so as to reduce the system power consumption. The minimum frequency is about 20 KHz, which is outside the audio range.

Leading-Edge Blanking (LEB)

Each time the power MOSFET is switched on, a turn-on spike will inevitably occur at the sense resistor. To avoid fault trigger, a 350ns leading-edge blanking time is built in. Conventional RC filtering can therefore be omitted. During this blanking period, the current-limit comparator is disabled and can not switch off the gate driver.

Internal Slope Compensation

A built-in slope compensation circuit is constructed in GR8835A. When the switch is on, a ramp voltage is added to the sensed voltage across the CS pin, which helps to stabilize the system and prevent sub-harmonic oscillations.

Over-load Protection (OLP)

The controller has over load protection function. An internal circuit detects the load level, when the load is larger than a threshold and the condition lasts more than 60ms, the gate output will keep low level. Then VCC decreases below UVLO off level, the controller resets again. Fig.14 shows the waveform of the OLP operation.

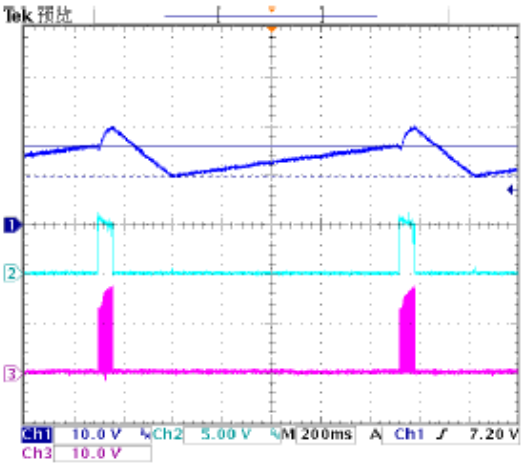

Fig.14

OVP (Over Voltage Protection) on VCC

To prevent power MOSFET from being damaged, the GR8835A is implemented an OVP function on VCC. When the VCC voltage is higher than the OVP threshold voltage, the output gate driver circuit will be shut down immediately to stop the switching of power MOSFET.

The VCC OVP function is an auto-recovery type protection. If OVP happens, the pulses will be stopped and recover at the next UVLO on. The GR8835A is working in a hiccup mode.

Gate Clamp/Soft Driving

Driver is clamped by an internal 13V Zener diode. Those damages usually come from undesired over-voltage gate signals. Under the conditions listed below, the gate output will turn off immediately to protect the power circuit. The GR8835A also has soft driving function to minimize EMI.

Fault Protection

There are several critical protection integrated in the

. CS pin floating

. RT pin floating

. RT pin short to ground

Green-Mode Operation without Acoustic Noise

When the load decreases to an extent, the switching frequency of the controller will decrease so as to reduce the system power consumption. The minimum frequency is around 20 KHz which is outside the audio noise range. Fig.15 is the relation between switching frequency and COMP pin voltage.

When load reduce to light load, the COMP pin voltage will also down to lower level. While COMP pin voltage down to 0.8V the controller will shut down the OUT pin to stop transfer the energy to secondary. Then the COMP pin will rise slowly due to no working of controller. If COMP pin rises to 0.9V, the controller will start to switch again. This is called the **burst mode** operation on light load for improving the light load efficiency.

When COMP pin between 1.1V to 1.65V, the switching frequency is operating from 20KHz to 65KHz. This section is called the **linearly decreasing frequency mode** for improving the medium load efficiency.

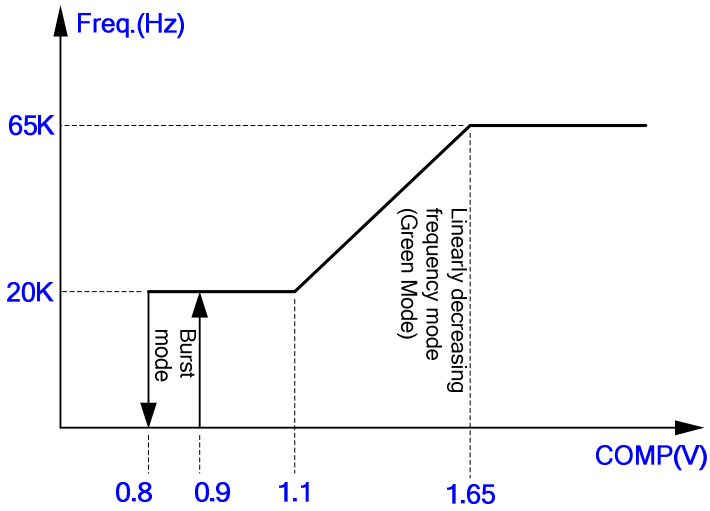

Fig.15

Typical Application Circuit

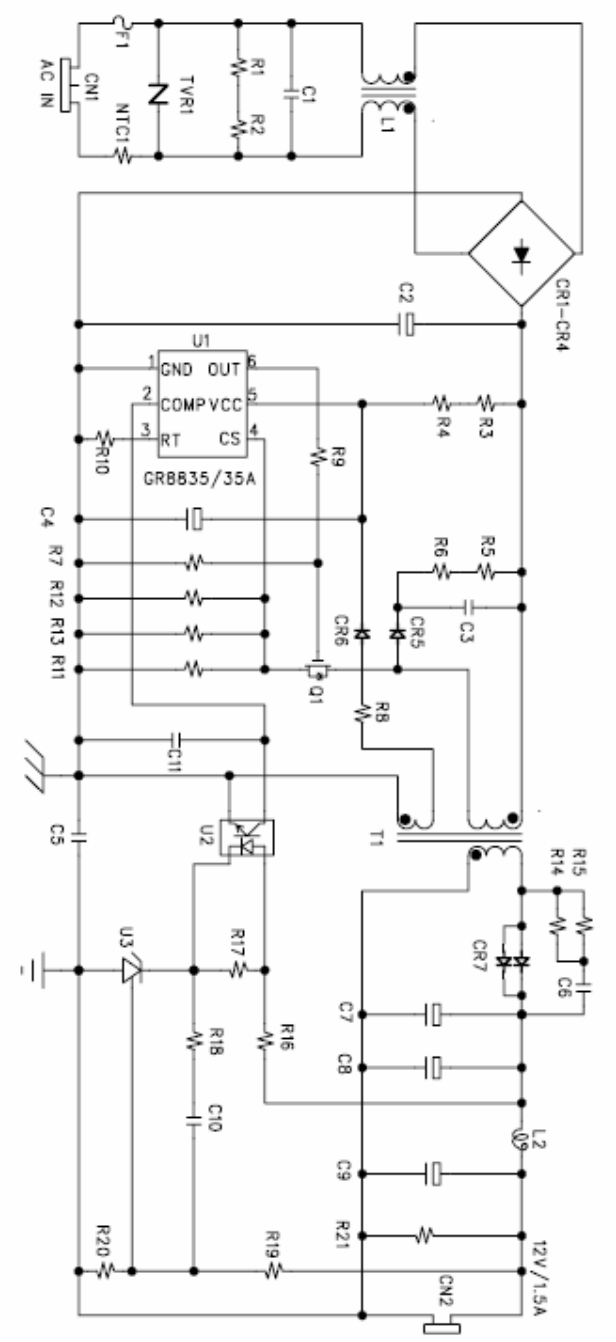

Bom List

No.	Part.No	Description	Note
1	C1	X-CAP/0.22uF	
2	C2	E-CAP 400V/33uF	
3	C3	102/1KV	
4	C4	E-CAP 50V/10uF	
5	C5	Y-CAP CD222	
6	C6	SMD0805, 200V/222	
7	C7	E-CAP 25V/330uF	
8	C8	E-CAP 25V/330uF	
9	C9	E-CAP 25V/100uF	
10	C10	SMD0805,103	
11	C11	N.A.	
12	CR1	HER108	
13	CR2	HER108	
14	CR3	HER108	
15	CR4	HER108	
16	CR5	FR107	
17	CR6	FR104	
18	CR7	SB5100	
19	CR8	N.A.	
20	F1	250V/1.5A	
21	HS1	Heat Sink	
22	L1	GRT160905F403-N	40mH
23	L2	GR0315-1R6M-N	1.6uH
24	NTC1	2.5Ω	
25	Q1	KHB4D5N60F	
26	R1	SMD1206 / 105	

No.	Part.No	Description	Note
27	R2	SMD1206 / 105	
28	R3	SMD1206 / 754	
29	R4	SMD1206 / 754	
30	R5	SMD1206 /393	
31	R6	SMD1206 / 683	
32	R7	SMD0805 / 103	
33	R8	SMD0805 / 10R	
34	R9	SMD0805 / 68R	
35	R10	SMD0805 / 1003	1%
36	R11	SMD1206 / 2.7R	5%
37	R12	SMD1206 / 2.7R	5%
38	R13	SMD1206 / 3.9R	5%
39	R14	SMD1206 /22R	
40	R15	SMD1206 /22R	
41	R16	SMD0805 / 102	
42	R17	N.A.	
43	R18	SMD0805 / 393	
44	R19	SMD0805 / 153	1%
45	R20	SMD0805 / 392	1%
46	R21	N.A.	
47	T1	EE25	1.4mH
48	TVR1	07471	
49	U1	GR8835/35A	SOT-26
50	U2	PC123	
51	U3	GL431	

Package Information

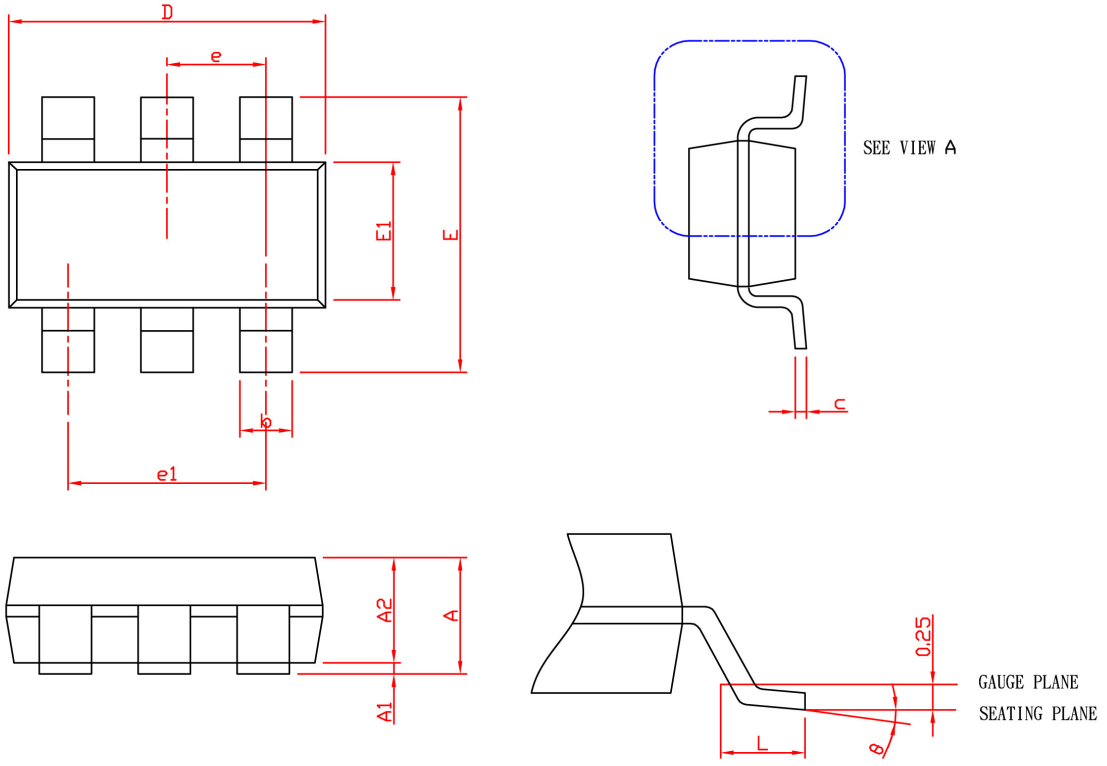

SYMBOL	SOT-26			
	MILLIMETERS		INCHES	
	MIN.	MAX.	MIN.	MAX.
A		1.45		0.057
A1	0.00	0.15	0.000	0.006
A2	0.90	1.30	0.035	0.051
b	0.30	0.50	0.012	0.020
c	0.08	0.22	0.003	0.009
D	2.70	3.10	0.106	0.122
E	2.60	3.00	0.102	0.118
E1	1.40	1.80	0.055	0.071
e	0.95 BSC		0.037 BSC	
e1	1.90 BSC		0.075 BSC	
L	0.30	0.60	0.012	0.024
θ	0°	8°	0°	8°

Note : 1. Followed from JEDEC TO-178 AB.

2. Dimension D and E1 do not include mold flash, protrusions or gate burrs. Mold flash, protrusions or gate burrs shall not exceed 10 mil per side.

Package Information

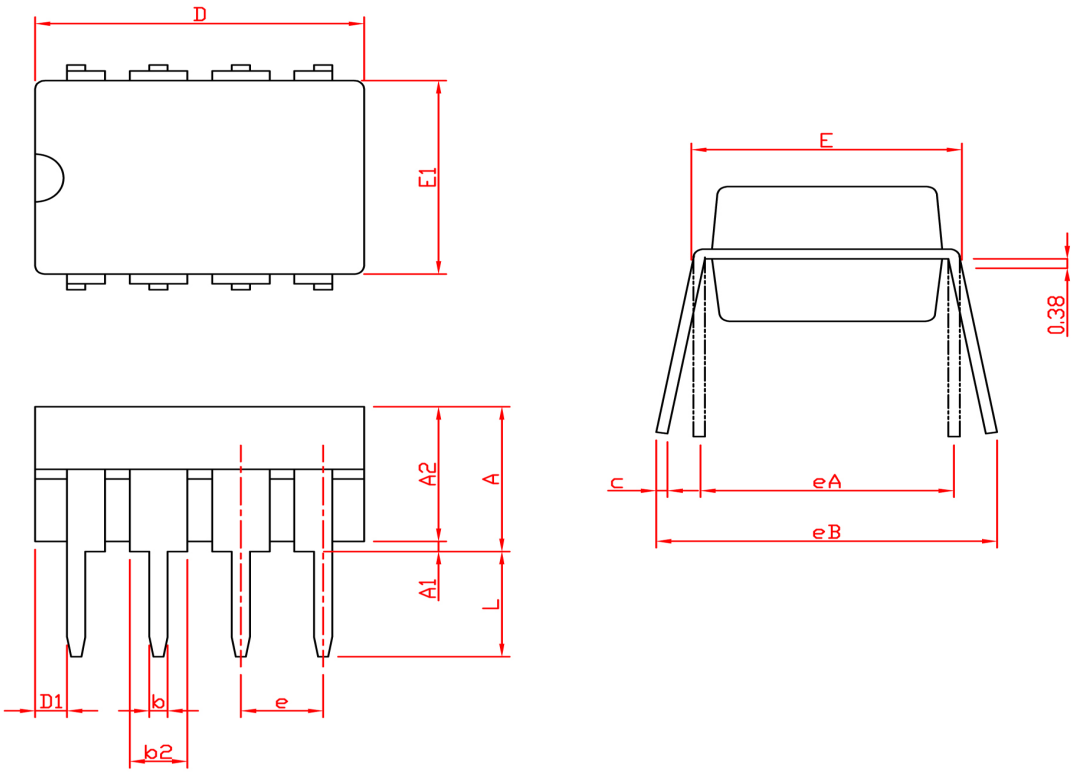

SYMBOL	DIP-8			
	MILLIMETERS		INCHES	
	MIN.	MAX.	MIN.	MAX.
A		5.33		0.210
A1	0.38		0.015	
A2	2.92	4.95	0.115	0.195
b	0.36	0.56	0.014	0.022
b2	1.14	1.78	0.045	0.070
c	0.20	0.35	0.008	0.014
D	9.01	10.16	0.355	0.400
D1	0.13		0.005	
E	7.62	8.26	0.300	0.325
E1	6.10	7.11	0.240	0.280
e	2.54 BSC		0.100 BSC	
eA	7.62 BSC		0.300 BSC	
eB		10.92		0.430
L	2.92	3.81	0.115	0.150

Note : 1. Followed from JEDEC MS-001 BA

2. Dimension D, D1 and E1 do not include mold flash or protrusions. Mold flash or protrusions shall not exceed 10 mil.

Carrier Tape & Reel Dimensions

SOT-26

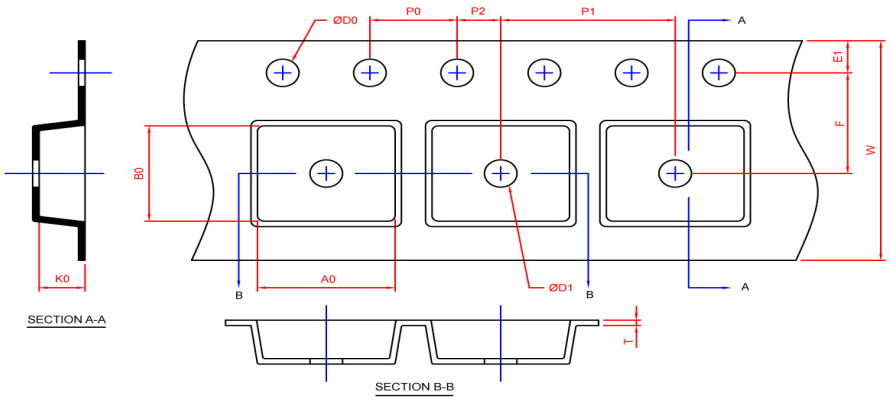

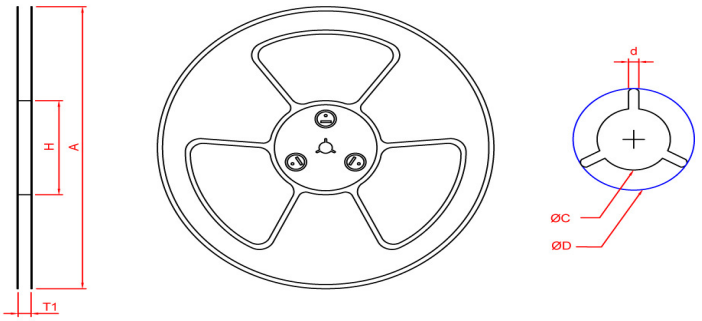

Application	A	H	T1	C	d	D	W	E1	F
SOT-26	178.0±2.00	50 MIN.	8.4+2.00 -0.00	13.0+0.50 -0.20	1.5 MIN.	20.2 MIN.	8.0±0.30	1.75±0.10	3.5±0.05
	P0	**P1**	**P2**	**D0**	**D1**	**T**	**A0**	**B0**	**K0**
	4.0±0.10	4.0±0.10	2.0±0.05	1.5+0.10 -0.00	1.0 MIN.	0.6+0.00 -0.40	3.20±0.20	3.10±0.20	1.50±0.20

(mm)

Application	Carrier Width	Cover Tape Width	Devices Per Reel
SOT -26	8	5.3	3000

Taping direction information

SOT-26

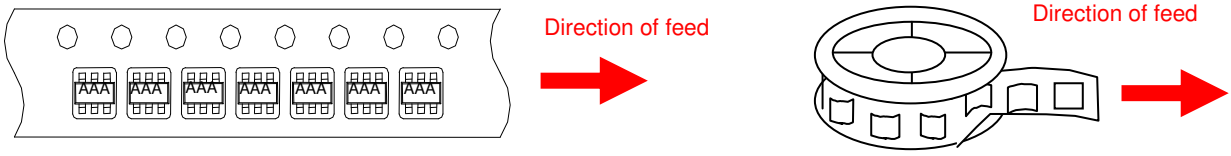

Grenergy OPTO, Inc. reserves the right to make corrections, modifications, enhancements, improvements, and other changes to its products and services at any time and to discontinue any product or service without notice. Customers should obtain the latest relevant information before placing orders and should verify that such information is current and complete.