1000 BASE –T QUAD PORT MAGNETICS MODULES
P/N: GP5429M-1 LF DATA SHEET

BOTHHAND USA

Feature

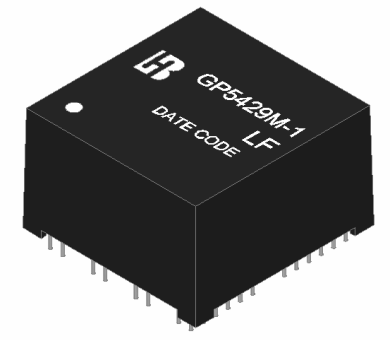

- Designed for Ethernet 10/100/1000 BASE-T, applications.
- Cable interface for isolation and low common mode emissions.
- Complying with IEEE 802.3ab standard for 1000 BASE-T.
- Complying with ROHS requirements.
- Operating temperature range: -40℃ to +85℃.
- Storage temperature range: -40℃ to +85℃.

Electrical Specifications @ 25°C							
Part Number	Turns Ratio (±5%)		OCL (uH Min) @100KHz/0.1V with 8mA DC Bias	Cross talk Attenuation (dB Min)			HI-POT (Vrms)
	TX	RX		30MHz	60MHz	100MHz	
GP5429M-1 LF	1CT:1CT	1CT:1CT	350	-40	-35	-30	1500

Continue									
Part Number	Insertion Loss (dB Max)	Return Loss (dB Min)@ Load 100Ω					DCMR (dB Min)		
	1-100MHz	1-30MHz	40MHz	50MHz	60-80MHz	100MHz	30MHz	60MHz	100MHz
GP5429M-1 LF	-1.0	-18	-14.4	-13.1	-12	-10	-40	-35	-30

Schematic

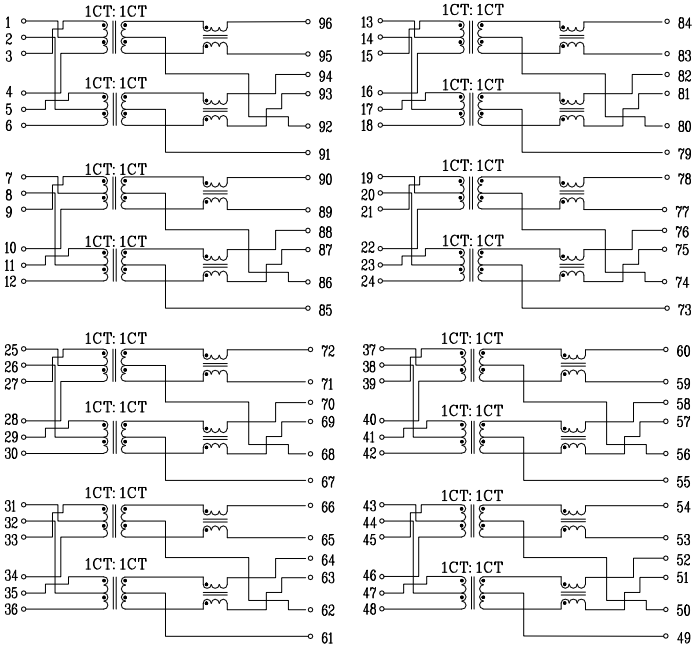

Mechanical

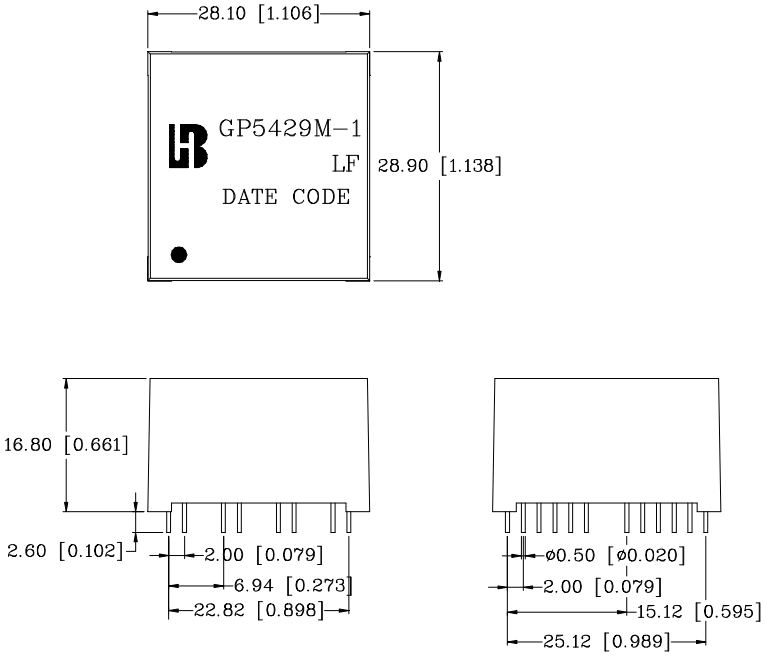

Units: mm[Inches] Tolerance: xx.x0±0.25[0.010]
0.xx±0.05[0.002]

PCB Layout mounting Hole (Top View)

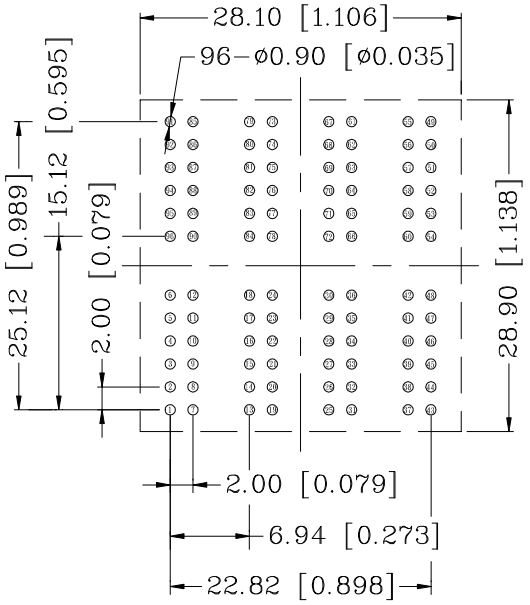

Unless otherwise specified,
all dimension tolerance are: ±0.08[±0.003]