SHARP

REFERENCE

SPEC No. ED-03021
ISSUE January 24, 2003

OPTO-ELECTRONIC DEVICES DIVISION
ELECTRONIC COMPONENTS GROUP
SHARP CORPORATION

SPECIFICATION

DEVICE SPECIFICATION FOR

Infrared Detecting unit for Remote Control

MODEL No.

GP1UW70QS series

Specified for

Enclosed please find copies of the Specifications which consists of 11 pages including cover.
After confirmation of the contents, please be sure to send back ☐ copies of the Specifications with approving signature on each.

CUSTOMER'S APPROVAL

DATE

BY

PRESENTED

DATE Jan. 28, 2003

BY H. Ogura

H. Ogura,
Department General Manager of
Engineering Dept., III
Opto-Electronic Devices Div.
ELECOM Group
SHARP CORPORATION

REFERENCE

Product name : Infrared Detecting unit for Remote Control

Model No. : GP1UW70QS series

1. These specification sheets include materials protected under copyright of Sharp Corporation ("Sharp"). Please do not reproduce or cause anyone to reproduce them without Sharp's consent.

2. When using this product, please observe the absolute maximum ratings and the instructions for use outlined in these specification sheets, as well as the precautions mentioned below. Sharp assumes no responsibility for any damage resulting from use of the product which does not comply with the absolute maximum ratings and the instructions included in these specification sheets, and the precautions mentioned below.

(Precautions)

(1) This product is designed for use in the following application areas ;

(• OA equipment • Audio visual equipment • Home appliances
• Telecommunication equipment (Terminal))

If the use of the product in the above application areas is for equipment listed in paragraphs (2) or (3), please be sure to observe the precautions given in those respective paragraphs.

(2) Appropriate measures, such as fail-safe design and redundant design considering the safety design of the overall system and equipment, should be taken to ensure reliability and safety when this product is used for equipment which demands high reliability and safety in function and precision, such as ;

(• Transportation control and safety equipment (aircraft, train, automobile etc.)
• Traffic signals • Gas leakage sensor breakers • Rescue and security equipment
• Other safety equipment etc.)

(3) Please do not use this product for equipment which require extremely high reliability and safety in function and precision, such as ;

(• Space equipment • Telecommunication equipment (for trunk lines)
• Nuclear power control equipment • Medical equipment etc.)

(4) Please contact and consult with a Sharp sales representative if there are any questions regarding interpretation of the above three paragraphs.

3. Please contact and consult with a Sharp sales representative for any questions about this product.

REFERENCE

1. Application

This specifications applies to the model marked "○" in the following models of infrared detecting unit for remote control.

The model list of GP1UW70QS series

Application	Model No.	B.P.F. center frequency (TYP)
	GP1UW70QS	40 kHz
	GP1UW700QS	36 kHz
○	GP1UW701QS	38 kHz
	GP1UW702QS	36.7 kHz

Main application : TV set, VCR, Radio cassette recorder, Stereo

2. Outline — Refer to the attached sheet, Page 7.

3. Ratings and characteristics — Refer to the attached sheet, Page 4 to 6.

4. Reliability — Refer to the attached sheet, Page 8.

5. Outgoing inspection — Refer to the attached sheet, Page 9.

6. Supplement

1) This infrared detecting unit for remote control satisfies each performance requirements in para. 3.5, in the standard optical system in Fig.2.
2) This product is built-in photodiode.
3) Product mass : Approx. 0.7g
4) This product shall not contain the following materials.
Also, the following materials shall not be used in the production process for this product.
Materials for ODS : CFC_S, Halon, Carbon tetrachloride, 1.1.1-Trichloroethane (Methyl chloroform)
5) Brominated flame retardants
Specific brominated flame retardants such as the $PBBO_S$ and PBB_S are not used in this device at all.
6) Packing specification : Refer to the attached sheet, Page 10.
7) Country of origin : Philippine, Indonesia

7. Notes

1) Transmitting code
When this infrared remote control detecting unit shall be adopted for wireless remote control, please use it with the signal format of transmitter, which total duty ratio Dt (Emitting time $\sum_{N=1}^{n} t_N$ / Transmitting time for 1 block T) is 40% or less. ON signal time T_{ON} (Pulse width of the presence of modulated IR) should be 250 μs or more. In case that the signal format of total duty and ON signal time is out of above conditions, there is a case that reception distance is much reduced or output is not appeared.

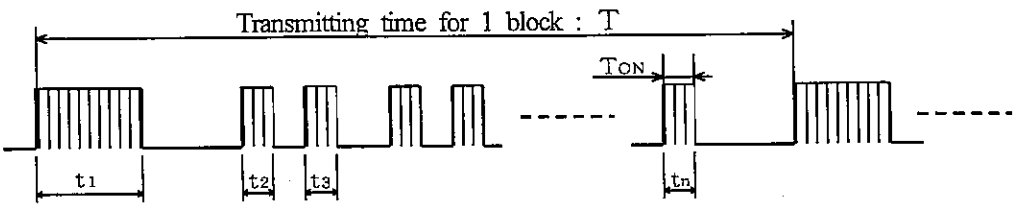

$$D_t = \left(\sum_{N=1}^{n} t_N / T\right) \times 100 \ (\%)$$

REFERENCE

2) Transmitter

Please use a light emitting unit (remote control transmitter) taking into consideration such factors as the performances, characteristics and operating condition of the light emitting element and the characteristics of this light detecting unit.

3) Detector face and cleaning

If the surface of detector is smeared with dust or dirt, it may cause faulty operation. Caution shall be taken to avoid this.
And do not touch the detector surface. If the surface was smeared, wipe it clean with soft cloth.
If any solvent is needed, Methyl alcohol, Ethyl alcohol, or Isopropyl alcohol should be used.
Please don't carry out washing. Because, after washing the remainder in solvent or flux in this device cause malfunction.
Marking on this device is defaced by washing.

4) Mounting this product

- The shield case shall be grounded on the PCB pattern.
  (There are two cases that shield case and GND pin are connected in the shield case, or are not connected in it.)
- It shall not be applied the terminal and case with unnecessary stress.
- Please don't push the detecting side (photodiode) from external.
- In order to prevent electrostatic discharge of integrated circuit, human body and soldering iron, etc. shall be grounded.
- The holes and the slits on the infrared detecting unit shall not be used as the other purpose to maintain its performance.
- When mounting, please mount the external circuit below. (CR filter)
  (External parts should be mounted as close as possible to the sensor.)

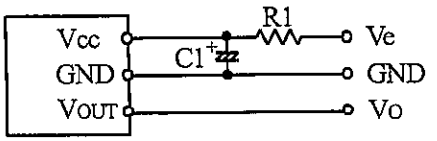

(Circuit fixed number)
R1=47 Ω ±5%
C1=47 μF

The circuit constant is a example. It is difference from mounting equipment. Please select it by your mounting equipment.
This device has a transistor as protection element between Vcc and GND to improve anti-static electricity proof.
Please be carefully not to apply exceeding the absolute maximum ratings of applying voltage and continuous high voltage spike noise because there is cases that transistor will be short by secondary breakdown generally.
In order to do difficultly, Please add CR filter (47 Ω(1/10W), 10 μF or more) such as external circuit example above near Vcc.

5) Characteristics of this product

- There is a possibility that noise on output may be caused by environmental condition etc.
  even if there is no input transmission signal.
- Please shall confirm operation or your actual machine. Because the output pulse width of this product is fluctuated by environmental conditions such as signal format, temperature, distance from transmitter, and so on.

6) Soldering

- In case that this product is kept in high humidity condition, it may be hard to solder, please be careful enough about storage method. Depend on the flux you select, there are different solderabilities, so please select a suitable flux and use it.
- Please don't do soldering this product by reflow.
- Please make sure in case of hand soldering that you use the solder iron with less than 45W power and the solder iron point (edge) temperature is less than 320℃ within 3 seconds, and also don't add any force to lead frame directly.
- Please make sure also you check the mountability prior to the process since the solder portion between the case and the lead frame may be detached due to the heat when soldering.

7) Use condition

Please use this device away from the dew drop. Be aware that the dew drop rusts shield case and others, may affect the electric characteristics.

8) Outlook of device

The lead flame may be deformed since the device is packed in vinyl bag.

REFERENCE

3. Ratings and characteristics

3.1 Schematic

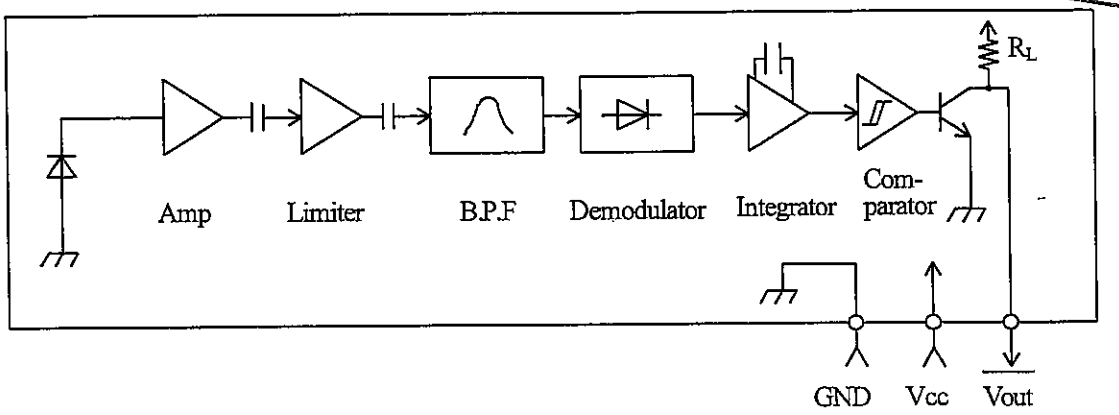

3.2 Absolute maximum ratings

Parameter	Symbol	Ratings	Unit
Supply voltage	Vcc	0 to 6.0	V
Operating temperature	Topr	-10 to +70 ※1	℃
Storage temperature	Tstg	-20 to +70	℃
Soldering temperature	Tsol	260 (Soldering time : 5s) ※2	℃

※1) No dew drop

※2) 1.6mm at mounting on single-sided PCB

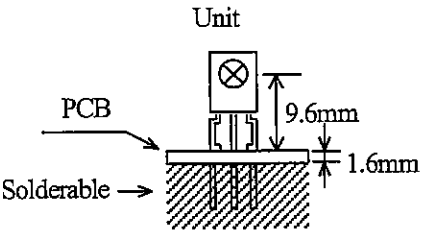

3.3 Recommended operating conditions

Parameter	Symbol	Operating condition	Unit
Supply voltage	Vcc	2.4 to 3.6	V

3.4 Electrical characteristics (Unspecified Ta=25℃, Vcc=+3V)

Parameter	Symbol	MIN.	TYP.	MAX.	Unit	Remark
Current dissipation	Icc	-	0.4	0.6	mA	No input light
High level output voltage	V_{OH}	Vcc-0.5	-	-	V	※3
Low level output voltage	V_{OL}	-	-	0.45	V	※3 I_{OL}=1.6mA
High level pulse width	T_1	600		1200	μs	※3
Low level pulse width	T_2	400		1000	μs	※3
B.P.F. center frequency	f_0		※4		kHz	
Output pull-up resistance	R_L	70	100	130	kΩ	

※3) The burst wave as shown in the figure on the right shall be transmitted by the transmitter shown in Fig.1. However, the carrier frequency of transmitter is same as ※4 kHz. Measuring shall be from just after starting the transmission until 50 pulse.

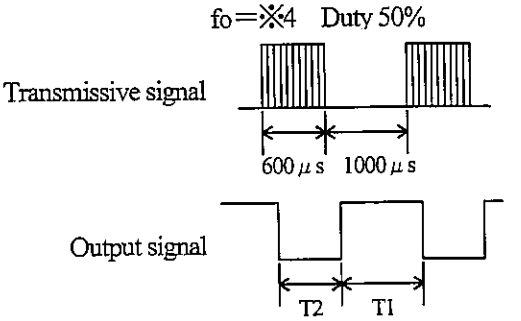

REFERENCE

※4) B.P.F. center frequency : f_0 of each model is shown in the list below.

Model No.	B.P.F. center frequency (TYP)
GP1UW70QS	40 kHz
GP1UW700QS	36 kHz
GP1UW701QS	38 kHz
GP1UW702QS	36.7 kHz

3.5 Performance

The output signal of this infrared detecting unit shall satisfy the following requirements with the transmitter shown in Fig.1 used in the standard optical system in Fig.2.

3.5.1 Characteristics of linear reception distance

The output signal shall satisfy the electrical characteristic requirements in para. 3.4 at L=0.2 to 8.0m, (※5) Ev＜10lx, $\phi=0^\circ$ in Fig.2.

3.5.2 Characteristics of sensitivity angle reception distance

The output signal shall satisfy the electrical characteristic requirements in para. 3.4 at L=0.2 to 6.0m, (※5) Ev＜10lx, $\phi \leqq 30^\circ$ in Fig.2.

3.5.3 Characteristics of anti-outer peripheral light reception distance

The output signal shall satisfy the electrical characteristic requirements in para. 3.4 at L=0.2 to 4.0m, (※5, ※6) Ev≦300lx, $\phi=0^\circ$ in Fig.2.

※5) It refers to detector face illuminance.

※6) Outer peripheral light source : CIE standard light source A shall be used and placed at 45° from the perpendicular axis at the detector face center.

REFERENCE

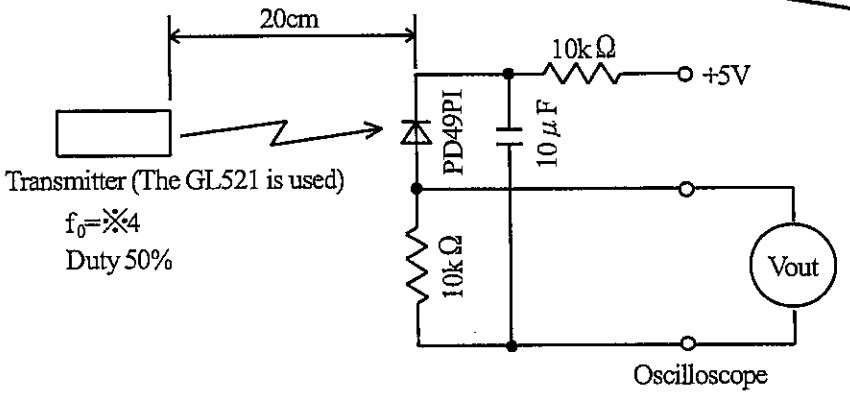

In the figure above, the transmitter shall be set as the output Vout (p-p) will be 40mV.
Note that the PD49PI in this application is the one with short-circuit current
Isc=2.6 μA measured at Ev=100lx. (Ev is the illuminance by CIE standard light source A (tungsten lamp)).

Fig. 1 Transmitter

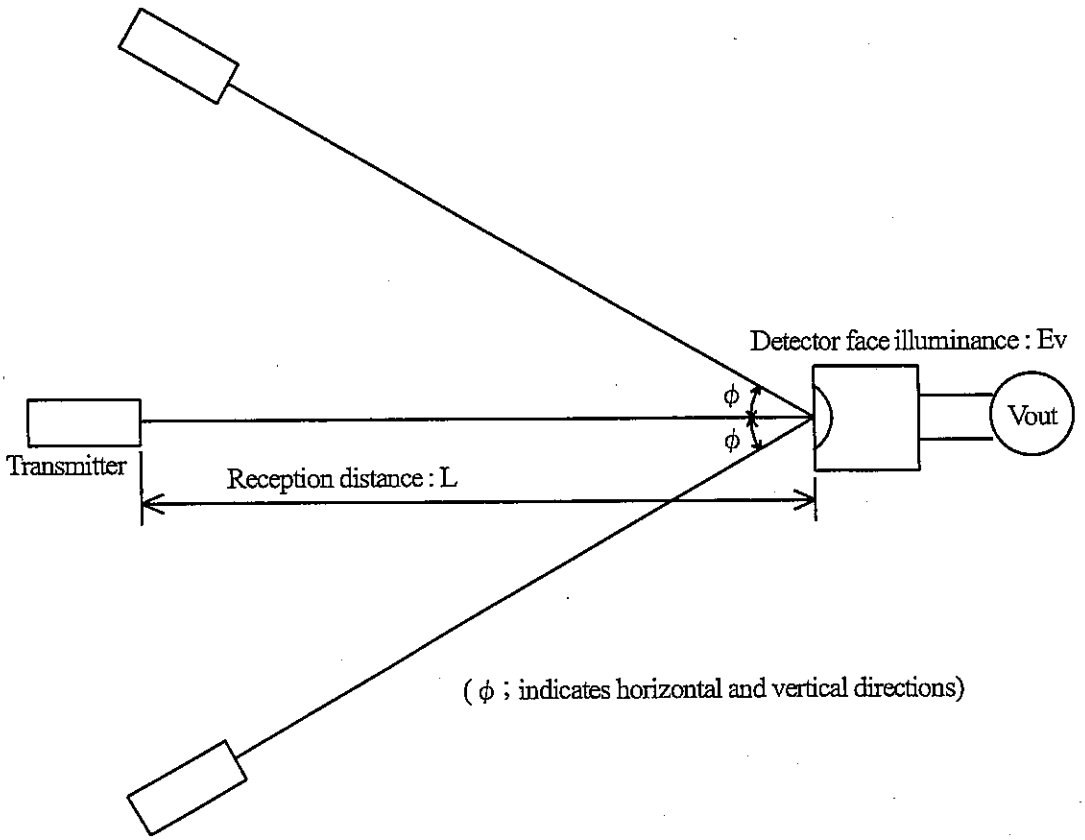

Fig.2 Standard optical system

REFERENCE

Stamp list

Model No.	Stamp
GP1UW70QS	Without
GP1UW701QS	1
GP1UW702QS	2
GP1UW700QS	0

Production place list

Lot No.	Production place
1313	Philippine
$\overline{1313}$	Indonesia

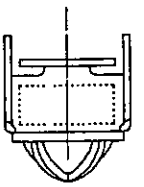

* Stamp area

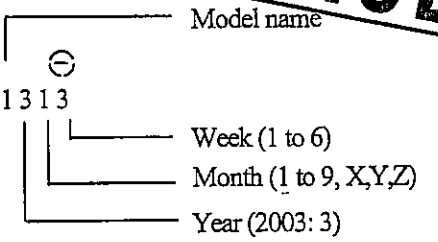

The " - " mark inside ◯ shows production place. (*3)

* Carved seal

S ——— Sharp mark

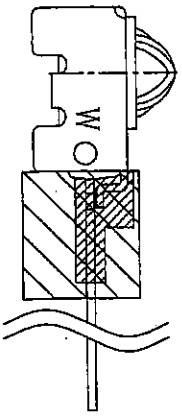

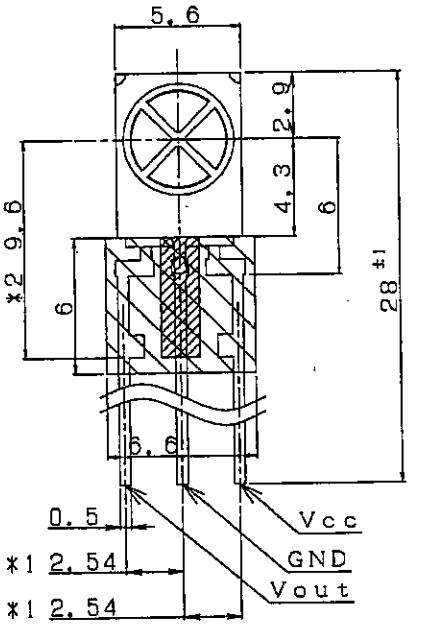

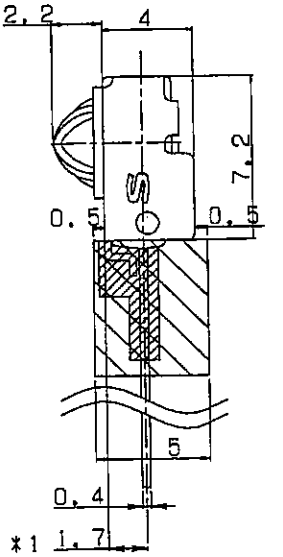

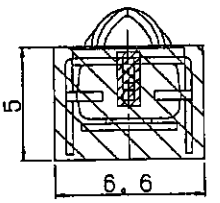

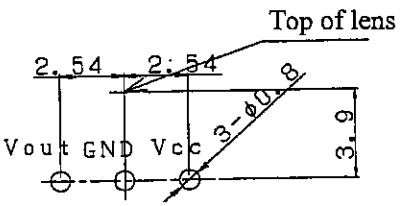

Example of mounting drawing from solder side (Reference)

1. *1 : Indicates root dimensions of connector
2. Unspecified tolerance : ±0.3
3. Case thickness : 0.3TYP.
4. Case material : Fe
5. Case finish : Solder plating (Sn, Pb)
6. Lead material : Fe (Ag plating)
7. Lead finish : Solder dip (Sn, Ag, Cu).
8. Mold resin : Epoxy resin
9. Product mass : Approx. 0.7g
10. *2 : Exclude sagged solder
11. *3 : The " – " mark above lot number indicate production place. (Production country is referred to the production place list.)
12. ▨: The portion indicates soldering connection area between case and leads. However, it never short with other frame.
13. ▨ portion may have some solder balls by GND soldering. Solder adhesives should be acceptable.

Scale	Name	GP1UW70QS series Outline Dimensions
3/1		
Unit		
1=1/1mm	Drawing No.	RUD3120

REFERENCE

4. Reliability

The reliability of products shall satisfy items listed below.

Confidence level : 90%

LTPD : 10 or 20

Test Items	Test Conditions	Failure Judgement Criteria	Samples (n) / Defective(C)
Terminal strength (Tension)	Weight : 5N, 30s / each terminal	Performance test in para. 3.5 should not be satisfied.	n=11, C=0
Terminal strength (Bending)	Weight : 2.5N 0° -90° -0° , 2 times / each terminal		n=11, C=0
Shock	Acceleration : 1000m/s^2, 6ms 3 directions / 3 times		n=11, C=0
Variable frequency vibration	Frequency range : 10 to 55Hz/ sweep 1min Overall amplitude : 1.5mm X, Y, Z/2h each		n=11, C=0
* High temp. and high humidity storage	Ta=40℃, 90%RH, t=240h		n=22, C=0
* High temp. storage	Ta=70℃, t=240h		n=22, C=0
* Low temp. storage	Ta=-20℃, t=240h		n=22, C=0
* Temperature cycling	1cycle -20℃ to +70℃ (30min) (30min) 20 cycles test		n=22, C=0
* Operation life (High temperature)	Ta=70℃, Vcc=3V, t=240h		n=22, C=0
Solder heat	MAX. 260℃, 5s (1.6mm at mounting on single-sided PCB)		n=11, C=0

In the test *mark above, the sample to be tested shall be left at normal temperature and humidity for 2hours after it is taken out of the chamber. (No dew drop)

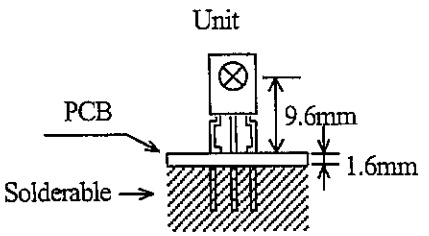

REFERENCE

5. Outgoing inspection

(1) Inspection lot

Inspection shall be carried out per each delivery lot.

(2) Inspection method

A single sampling plan, normal inspection level II based on ISO 2859 shall be applied.

Classification of Defects		Inspection Items	AQL (%)
Major defect	1	Electrical characteristic defect of V_{OH}, V_{OL}, T_1 and T_2 in para. 3.4.	0.4
	2	Distance between signal terminal and shield case (0.2mm or more) (Except for GND terminal)	
	3	It should have no remarkable stains and cracks that give any influence of electrical characteristic on light detecting face.	
Minor defect	1	Deformation of shield case (Satisfying outline dimensions of item 2)	1.5
	2	Stamp, Carved seal (It should be possible to read stamp and carved seal of item 2. Stamp and carved seal should be indicated at fixed position.)	

REFERENCE

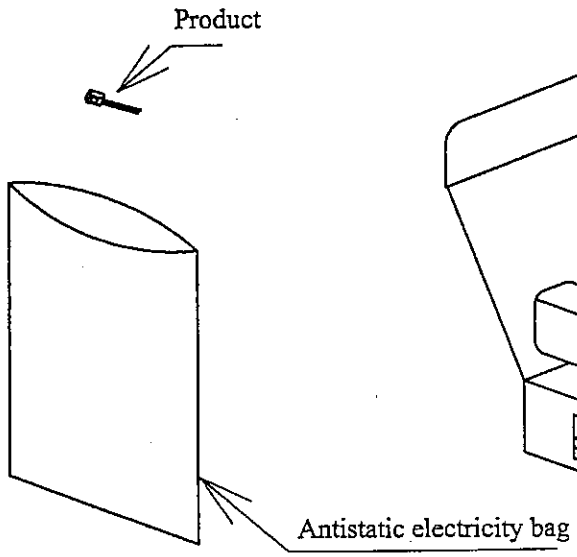

Fig.1

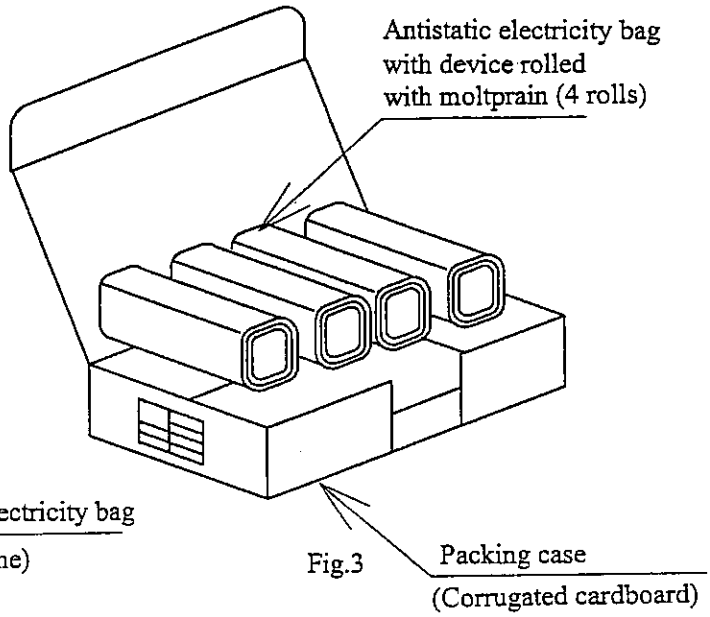

Fig.3

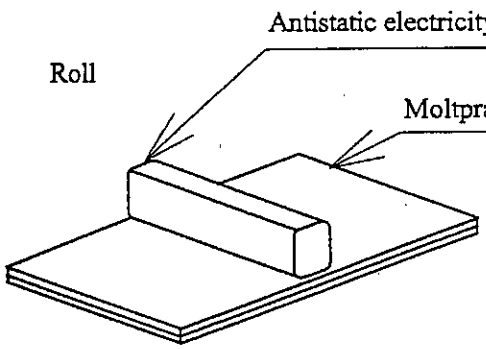

Fig.2

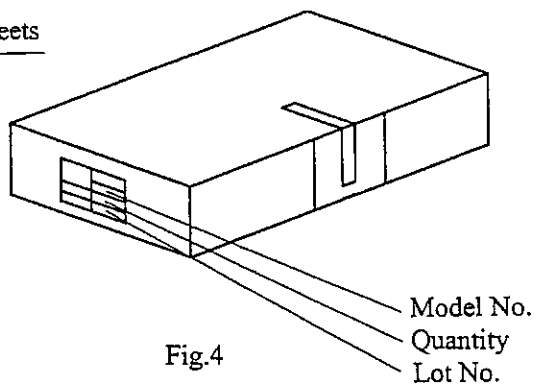

Fig.4

Packaging method

1. Put products of 100pcs. in the antistatic electricity bag. (Fig. 1)
2. 4 rolls with 2 moltoprain based on 1 are packed in packing box. (Fig. 2)
3. Seal the packing box , and print the model No., quantity and lot No. (400pcs. / a packing box) (Fig. 3)
   - Product mass at 400pcs./package : Approximately 310g

Scale		Name	GP1UW70QS series Packing specification
Unit		Drawing No.	RUD3121
1= / mm			