GP1F361T/GP1F361R

Optical Mini-Jack for Digital Audio Equipment

■ Features

1. Electric and optical signal compatible design
   (Three kinds of terminals are integrated into a single unit.)
2. Compact design with small jack compatible mini-plug
3. OPIC type
   (Direct interface to microcomputer of the I/O signals)
   (High fidelity real sound reproduction)
4. High speed data transmission
   Signal transmisson speed: MAX. 8Mbps
   (NRZ signal)
5. Low voltage drive (2.7V to 3.6V)

■ Applications

1. MD, DCC
2. Portable CD, DAT

■ Outline Dimensions

(Unit : mm)

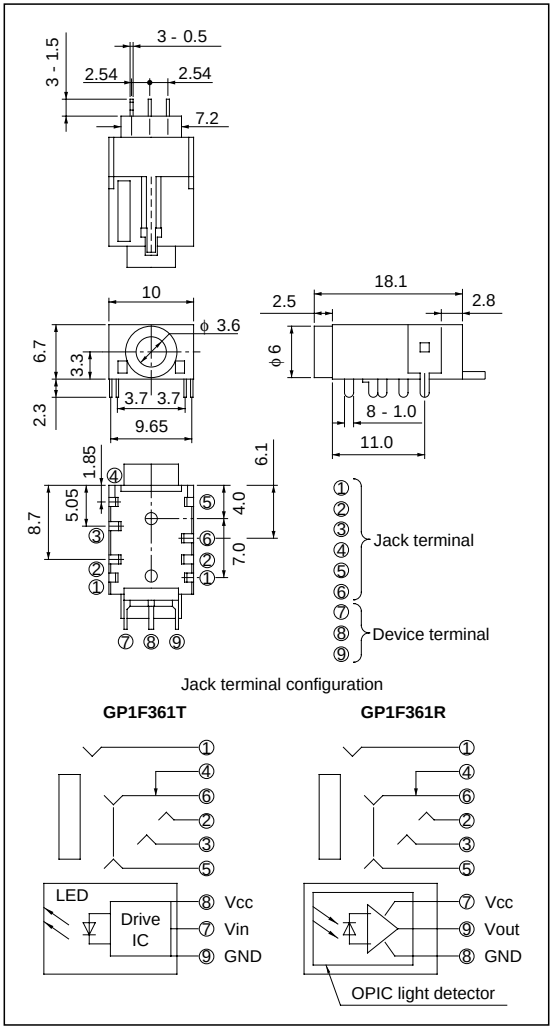

∗ OPIC is a trademark of Sharp and stands for Optical IC. It has light detecting element and signal processing circuitry integrated single chip.

" In the absence of confirmation by device specification sheets, SHARP takes no responsibility for any defects that occur in equipment using any of SHARP's devices, shown in catalogs, data books, etc. Contact SHARP in order to obtain the latest version of the device specification sheets before using any SHARP's device. "

■ Absolute Maximum Ratings

GP1F361T/GP1F361R (Photoelectric conversion element)

Parameter	Symbol	Rating	Unit
Supply voltage	V_{CC}	- 0.5 to + 7.0	V
Output current (**GP1F361R**)	I_{OH}	2 (source current)	mA
	I_{OL}	10 (sink current)	mA
Input voltage (**GP1F361T**)	V_{in}	- 0.5 to V_{CC} + 5.0	V
Operating temperature	T_{opr}	- 20 to + 70	˚C
Storage temperature	T_{stg}	- 30 to + 80	˚C
*1Soldering temperature	T_{sol}	260	˚C

GP1F361T/GP1F361R (Jack)

Parameter	Symbol	Rating	Unit
Total power dissipation	P_{tot}	D.C.12V, 1A	-
Isolation voltage	V_{iso}	A.C. 500V_{rms} (For 1min.)	-
Operating temperature	T_{opr}	- 20 to 70	˚C
Storage temperature	T_{stg}	- 30 to 80	˚C
*1Soldering temperature	T_{sol}	260	˚C

*1 5s/time up to 2 times.

■ Recommended Operating Conditions

GP1F361T

Parameter	Symbol	MIN.	TYP.	MAX.	Unit
Supply voltage	V_{CC}	2.7	3.0	3.6	V
Operating transfer rate	T	-	-	8	Mbps

GP1F361R

Parameter	Symbol	MIN.	TYP.	MAX.	Unit
Supply voltage	V_{CC}	2.7	3.0	3.6	V
Operating transfer rate	T	0.1	-	8	Mbps
Receiver input optical power level	P_C	- 24.0	-	- 14.5	dBm

■ Electro-optical Characteristics

GP1F361T (Photoelectric conversion element) (Ta = 25˚C)

Parameter	Symbol	Conditions	MIN.	TYP.	MAX.	Unit
Peak emission wavelength	λ_P	-	630	660	690	nm
Optical power output couple with fiber	P_C	Refer to Fig. 1	- 21	- 17	- 15	dBm
Supply current	I_{CC}	Refer to Fig. 2	-	8	12	mA
High level input voltage	V_{iH}	Refer to Fig. 2	2.1	-	-	V
Low level input voltage	V_{iL}	Refer to Fig. 2	-	-	0.8	V
Low→High delay time	t_{PLH}	Refer to Fig. 3	-	-	180	ns
High→Low delay time	t_{PHL}	Refer to Fig. 3	-	-	180	ns
Pulse width distortion	Δtw	Refer to Fig. 3	- 30	-	+ 30	ns
Jitter	Δtj	Refer to Fig. 3	-	1	30	ns

GP1F361R (Photoelectric conversion element) (Ta = 25°C)

Parameter		Symbol	Conditions	MIN.	TYP.	MAX.	Unit
Peak sensitivity wavelength		λ_P	-	-	700	-	nm
Supply current		I_{CC}	Refer to Fig. 4	-	12	15	mA
High level output voltage		V_{OH}	Refer to Fig. 5	2.1	-	-	V
Low level output voltage		V_{OL}	Refer to Fig. 5	-	-	0.4	V
Rise time		t_r	Refer to Fig. 5	-	17	30	ns
Fall time		t_f	Refer to Fig. 5	-	5	30	ns
Low→High delay time		t_{PLH}	Refer to Fig. 5	-	-	180	ns
High→Low delay time		t_{PHL}	Refer to Fig. 5	-	-	180	ns
Pulse width distortion		Δtw	Refer to Fig. 5	- 30	-	+ 30	ns
Jitter	P_C= - 14.5dBm	Δtj	Refer to Fig. 6	-	1	30	ns
	P_C= - 24dBm			-	-	30	ns

■ Mechanical and Electrical Characteristics

GP1F361T/GP1F361R (Jack)

Parameter	Symbol	Conditions	MIN.	TYP.	MAX.	Unit
Insertion force, Withdrawal force	F_P	*2	5	-	35	N
Contact resistance	Rcon	*3	-	-	30	mΩ
Isolation resistance	R_{ISO}	D.C. 500V, 1min.	100	-	-	MΩ

Note) This jack is designed for appliacable to ϕ 3.5 compact single head plug (EIAJ RC-6701A).

*2 Measuring method of insertion force and withdrawal force.
Insertion and withdrawal force shall be measured after inserting and withdrawing 3 times by using EIAJ RC-6701A standard plug for test.

*3 Measuring method of contact resistance.
About movable contact terminal and make contacts, it measures at 100mA or less and 1000Hz at the condition of inserting EIAJ 6701A standard plug for test.

Fig. 1 Measuring Method Optical Output Coupling Fiber

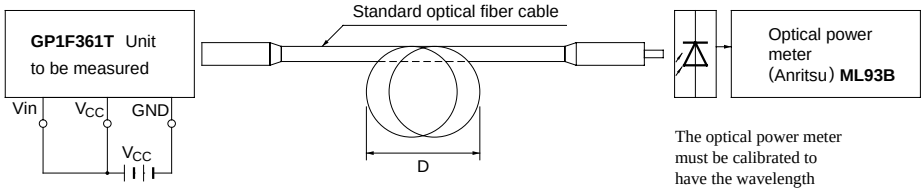

Note) (1) V_{CC} ; 3.0V ± 0.05V (State of operating)
(2) To bundle up the standard fiber optic cable, make it into a loop with the diameter D= 10cm or more.
(The standard fiber optic cable will be specified elsewhere)

Fig. 2 Measuring Method of Input Voltage and Supply Current

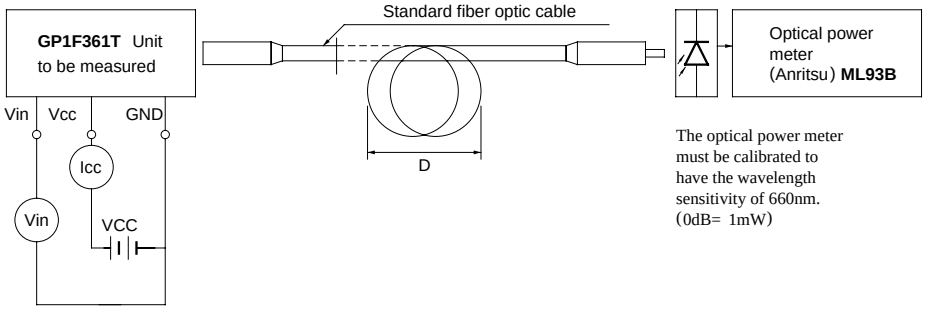

Input conditions and judgement method

Conditions	Judgement method
V_{in} = 2.1V or more	-21<=P_C<= -15dBm, I_{CC} = 12mA or less
V_{in} = 0.8V or less	P_C<= -36dBm, I_{CC} = 12mA or less

Note) V_{CC}= 3.0 ±0.05V (State of operating)

Fig. 3 Measuring Method of Pulse Response and Jitter

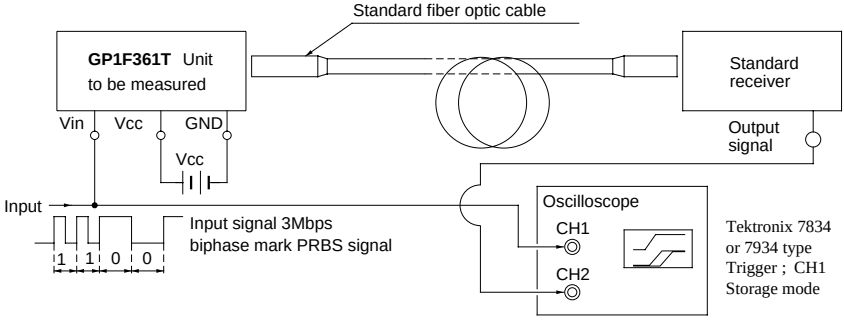

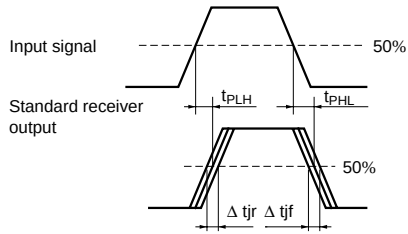

Test item

Test item	Symbol	Test condition
Low→ High pulse delay time	t_{PLH}	-
High→ Low pulse delay time	t_{PHL}	-
Pulse width distortion	Δtw	$\Delta tw = t_{PHL} - t_{PLH}$
Low→ High Jitter	Δtjr	Set the trigger on the rise of input signal to measure the jitter of the rise of output
High→ Low Jitter	Δtjf	Set the trigger on the fall of input signal to measure the jitter of the fall of output

Notes (1) The waveform write time shall be 4 seconds. But do not allow the waveform to be distorted by increasing the brightness too much.
(2) V_{CC} = 3.0 ±0.05V (State of operating)
(3) The probe for the oscilloscope must be more than 1MΩ and less than 10pF.

Fig. 4 Supply Current

Input conditions		Measuring method
Supply voltage	V_{CC} = 3.0 ± 0.05V	Measured on an ammeter (DC average amperage)
Optical output coupling fiber	P_C = - 14.5dBm	
Standard transmitter input signal	6Mbps NRZ, Duty50 %or 3Mbps biphase mark PRBS signal	

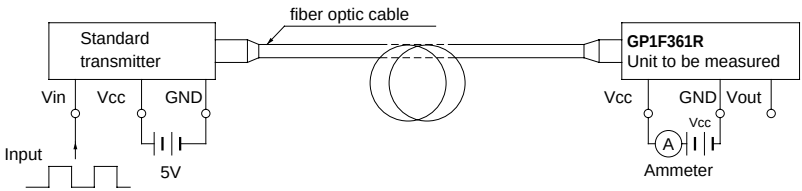

Fig. 5 Measuring Method of Output Voltage and Pulse Response

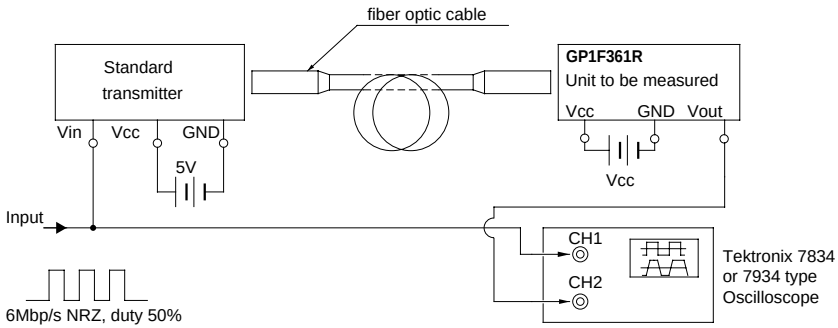

Test item

Test item	Symbol
Low→High pulse delay time	t_{PLH}
High→Low pulse delay time	t_{PHL}
Rise time	t_r
Fall time	t_f
Pulse width distortion $\Delta tw = t_{PHL} - t_{PLH}$	Δtw
High level output voltage	V_{OH}
Low level output voltage	V_{OL}

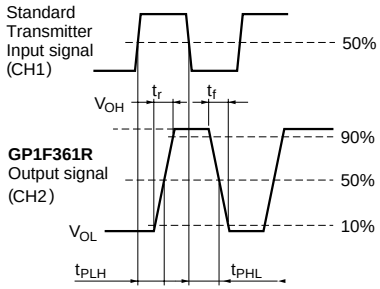

Notes (1) V_{CC} = 3.0 ±0.05V (State of operating)
(2) The fiber coupling light output set at - 14.5dBm/ - 24.0dBm.
(3) The probe for the oscilloscope must be more than 1MΩ and less than 10pF.
(4) The output (H/L level) of **GP1F361R** are not fixed constantly when it receivers the disturbing light (including DC light, no input light) less than 0.1Mbps.

Fig. 6 Measuring Method of Jitter

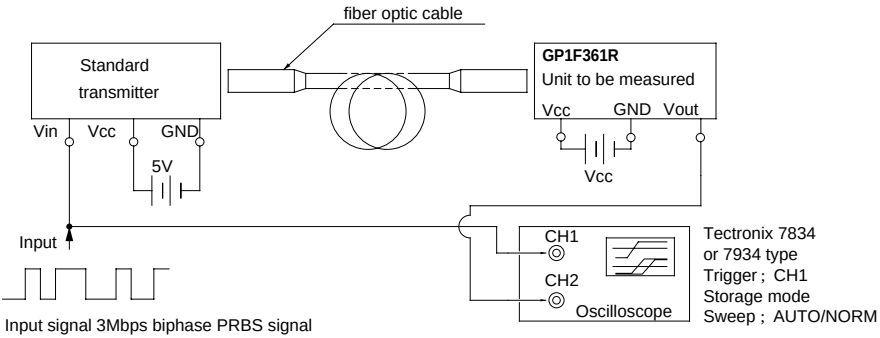

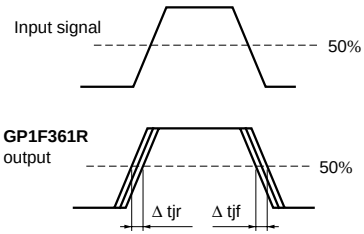

Test item

Test item	Symbol	Test condition
Low→ High jitter	Δtjr	Set the trigger on the rise of input signal to measure the jitter of the rise of output
High→ Low jitter	Δtjf	Set the trigger on the fall of input signal to measure the jitter of the fall of output

Notes (1) The fiber coupling light output set at - 14.5dBm/ - 24.0dBm.
(2) The waveform write time shall be 3 seconds. But do not allow the waveform to be distorted by increasing the brightness too much.
(3) V_{CC} = 3.0 ± 0.05V (State of operating)
(4) The probe for the oscilloscope must be more than 1MΩ and less than 10pF.

■ Optical Mini-Jack Connection Example

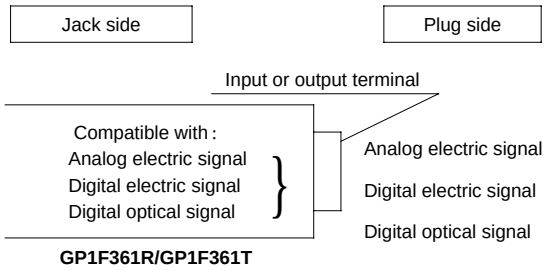

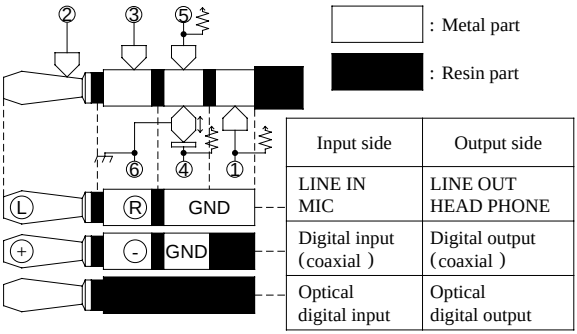

Input side	Output side
LINE IN MIC	LINE OUT HEAD PHONE
Digital input (coaxial)	Digital output (coaxial)
Optical digital input	Optical digital output

Kinds of plug	Output		
	④	⑤	①
Analog electricity	L	L	L
Digital electricity	L	L	H
Digital optics	L	H	H
No plug	H	H	H

- Please refer to the chapter " Precautions for Use."