Certificate Number: Q10561

Certificate Number: E17276

GNOA - GNOM

GLASS PASSIVATED JUNCTION SILICON SURFACE MOUNT

PRV : 50 - 1000 Volts
Io : 1.5 Amperes

SMA (DO-214AC)

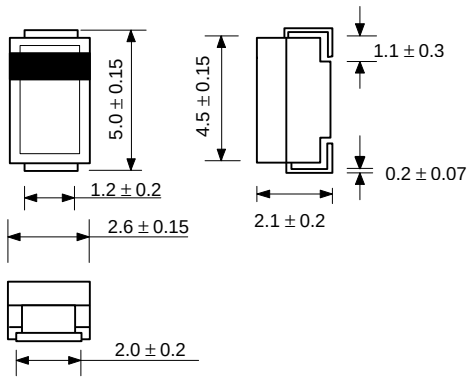

Dimensions in millimeter

FEATURES :

* Glass passivated chip
* High current capability
* High reliability
* Low reverse current
* Low forward voltage drop

MECHANICAL DATA :

* Case : SMA Molded plastic
* Epoxy : UL94V-O rate flame retardant
* Lead : Lead Formed for Surface Mount
* Polarity : Color band denotes cathode end
* Mounting position : Any
* Weight : 0.067 gram

MAXIMUM RATINGS AND ELECTRICAL CHARACTERISTICS

Rating at 25 °C ambient temperature unless otherwise specified.
Single phase, half wave, 60 Hz, resistive or inductive load.
For capacitive load, derate current by 20%.

RATING	SYMBOL	GNOA	GNOB	GNOD	GNOE	GNOG	GNOH	GNOJ	GNOK	GNOM	UNIT
Maximum Repetitive Peak Reverse Voltage	V_{RRM}	50	100	200	300	400	500	600	800	1000	V
Maximum RMS Voltage	V_{RMS}	35	70	140	210	280	350	420	560	700	V
Maximum DC Blocking Voltage	V_{DC}	50	100	200	300	400	500	600	800	1000	V
Maximum Average Forward Current Ta = 75°C	$I_{F(AV)}$	1.5									A
Peak Forward Surge Current 8.3ms Single half sine wave Superimposed on rated load (JEDEC Method)	I_{FSM}	50									A
Maximum Forward Voltage at I_F = 1.5 Amps.	V_F	1.1									V
Maximum DC Reverse Current Ta = 25 °C	I_R	5.0									µA
at rated DC Blocking Voltage Ta = 100 °C	$I_{R(H)}$	50									µA
Typical Junction Capacitance (Note1)	C_J	30									pF
Junction Temperature Range	T_J	- 65 to + 150									°C
Storage Temperature Range	T_{STG}	- 65 to + 150									°C

Notes :

(1) Measured at 1.0 MHz and applied reverse voltage of 4.0V_{DC}

RATING AND CHARACTERISTIC CURVES (GNOA - GNOM)

FIG.1 - DERATING CURVE FOR OUTPUT RECTIFIED CURRENT

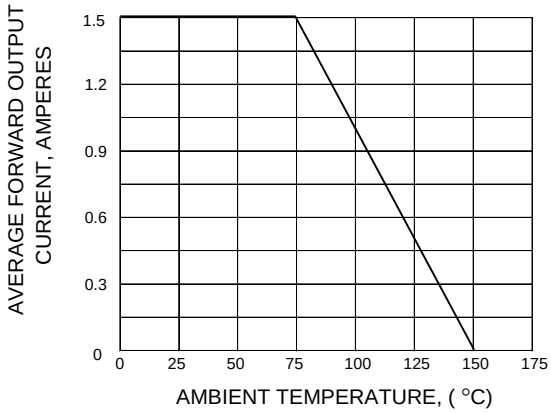

FIG.2 - MAXIMUM NON-REPETITIVE PEAK FORWARD SURGE CURRENT

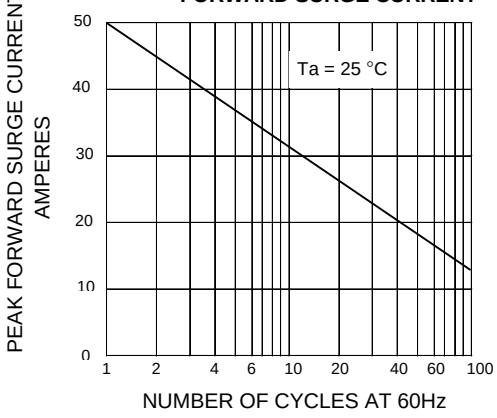

FIG.3 - TYPICAL FORWARD CHARACTERISTICS

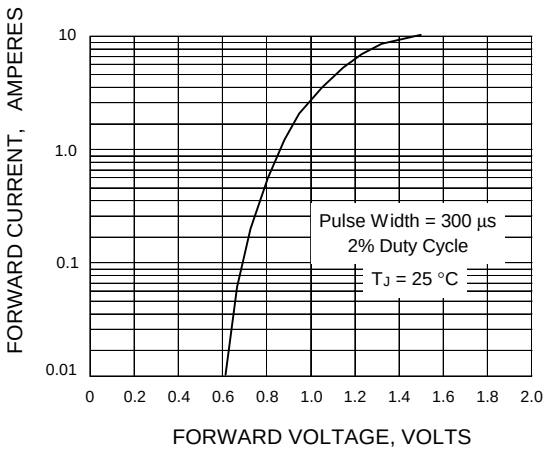

FIG.4 - TYPICAL REVERSE CHARACTERISTICS

