GAMMA MICROELECTRONICS

GMR10H150C

HIGH VOLTAGE POWER SCHOTTKY RECTIFIER

DESCRIPTION

Dual center tap schottky rectifier designed for high frequency Switched Mode Power Supplies.

Major Ratings and Characteristics

Characteristics	Values	Unit
$I_{F(AV)}$ Rectangular waveform	2 X 5	A
V_{RRM}	150	V
V_F @ 5 Apk, T_C = 125°C (per leg)	0.75	V
T_J range	-45 ~ +150	°C

FEATURES

- **High junction temperature capability**
- **Good trade off between leakage current and forward voltage drop**
- **Low leakage current**

TO-220AB

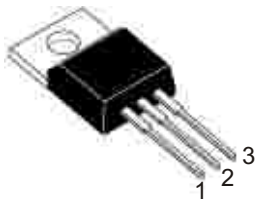

TO-263-2(D²PAK)

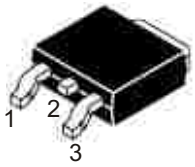

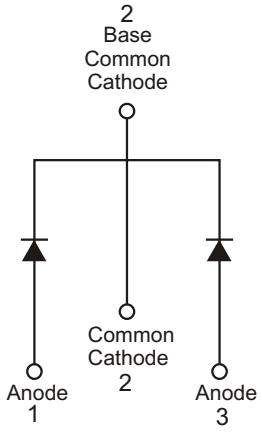

TO-220FPAB

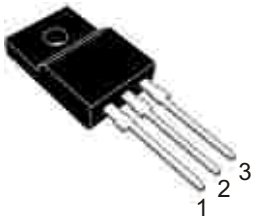

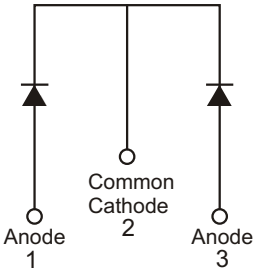

GAMMA MICROELECTRONICS

GMR10H150C

HIGH VOLTAGE POWER SCHOTTKY RECTIFIER

◆ MARKING INFORMATION

TO - 220AB

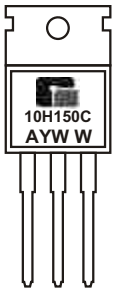

TO-263-2 (D^2PAK)

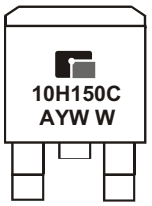

A : Assembly Location
Y : Year
WW : Weekly

◆ ORDERING INFORMATION

Ordering Number	Package	Shipping
GMR10H150CTA3T	TO - 263-2	50 Units/ Tube
GMR10H150CTA3R	TO - 263-2	800 Units/ Tape & Reel
GMR10H150CTB3T	TO - 220AB	50 Units/ Tube
GMR10H150CTBF3T	TO - 220FPAB	50 Units/ Tube

* For detail Ordering Number identification, please see last page.

◆ ABSOLUTE RATINGS (T_C = 25°C)

Symbol	Parameter		Value	Unit
V_{RRM}	Repetitive peak reverse voltage		150	V
$I_{F(AV)}$	Maximum average forward rectified current	per diode per device	5 10	A
I_{FSM}	Peak forward surge current 8.3ms single half sine-wave superimposed on rated load per leg. (Non-Repetitive)		160	A
T_j, T_{stg}	Operating junction temperature and storage temperature		-45 to + 150	°C

GAMMA MICROELECTRONICS

GMR10H150C

HIGH VOLTAGE POWER SCHOTTKY RECTIFIER

◆ Thermal Characteristics (T_C = 25°C unless otherwise noted)

Parameter	Symbol	TO-220AB	TO-220FPAB	TO-263-2	Unit
Typical thermal resistance per leg	RΘJC	2.4	4.2	2.4	°C/W

◆ Electrical Characteristics (T_C= 25°C unless otherwise noted)

Parameter			Symbol	Value	Unit
Maximum instantaneous forward voltage per leg (Note 1)	I_F = 5.0A,	T_C = 25°C	V_F	0.85	V
	I_F = 5.0A,	T_C = 125°C		0.75	
	I_F = 10A,	T_C = 25°C		-	
	I_F = 10A,	T_C = 125°C		-	
Maximum reverse current per leg at working peak reverse voltage (Note 1)		T_J = 25°C	I_R	5.0	μA
		T_J = 125°C		5.0	mA

Note 1: Pulse Test: Pulse Width= 300μs, Duty Cycle ≤2.0%

GAMMA MICROELECTRONICS

GMR10H150C

HIGH VOLTAGE POWER SCHOTTKY RECTIFIER

◆ TO-220AB PACKAGE OUTLINE DIMENSIONS

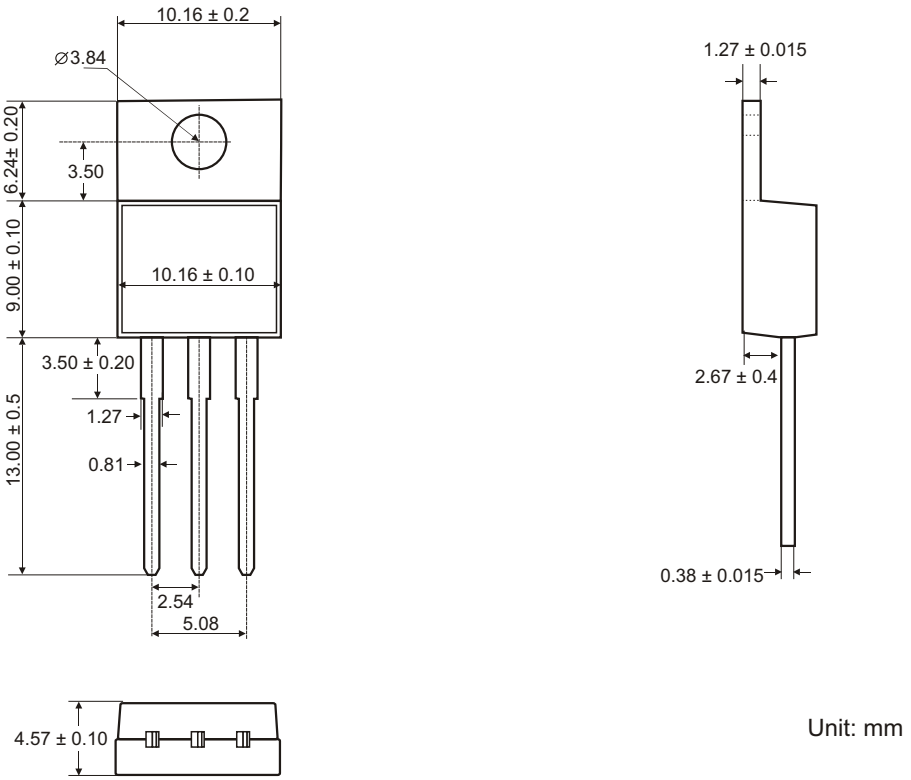

Unit: mm

◆ TO-220FPAB PACKAGE OUTLINE DIMENSIONS

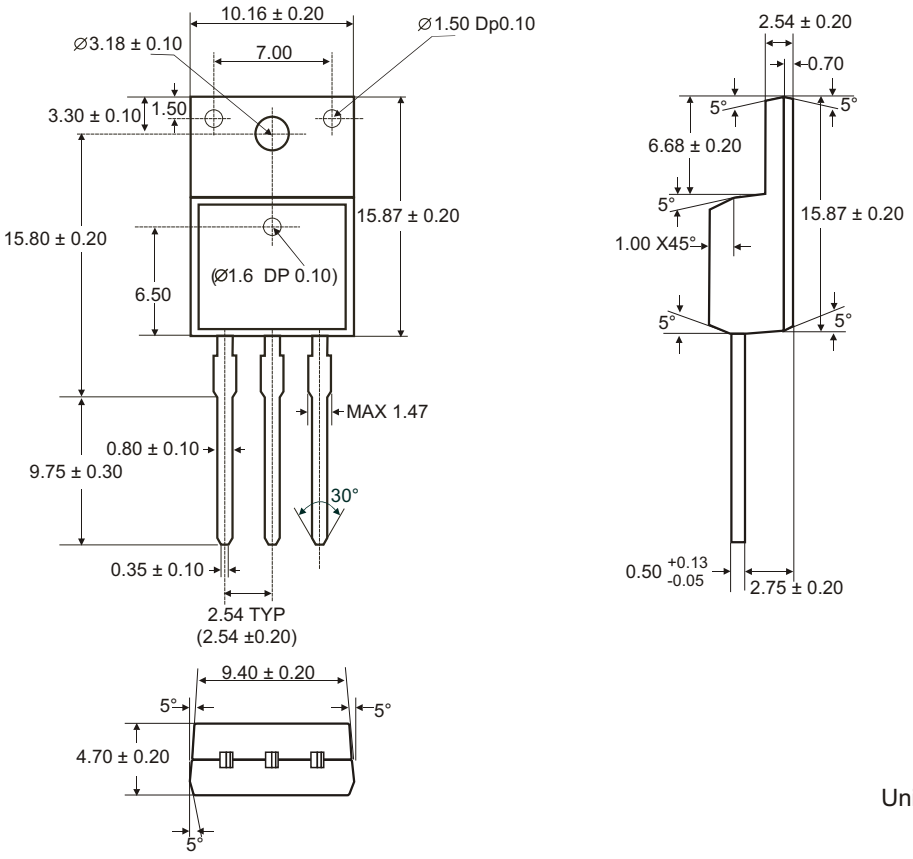

Unit: mm

GAMMA MICROELECTRONICS

GMR10H150C

HIGH VOLTAGE POWER SCHOTTKY RECTIFIER

◆ TO-263-2 PACKAGE OUTLINE DIMENSIONS

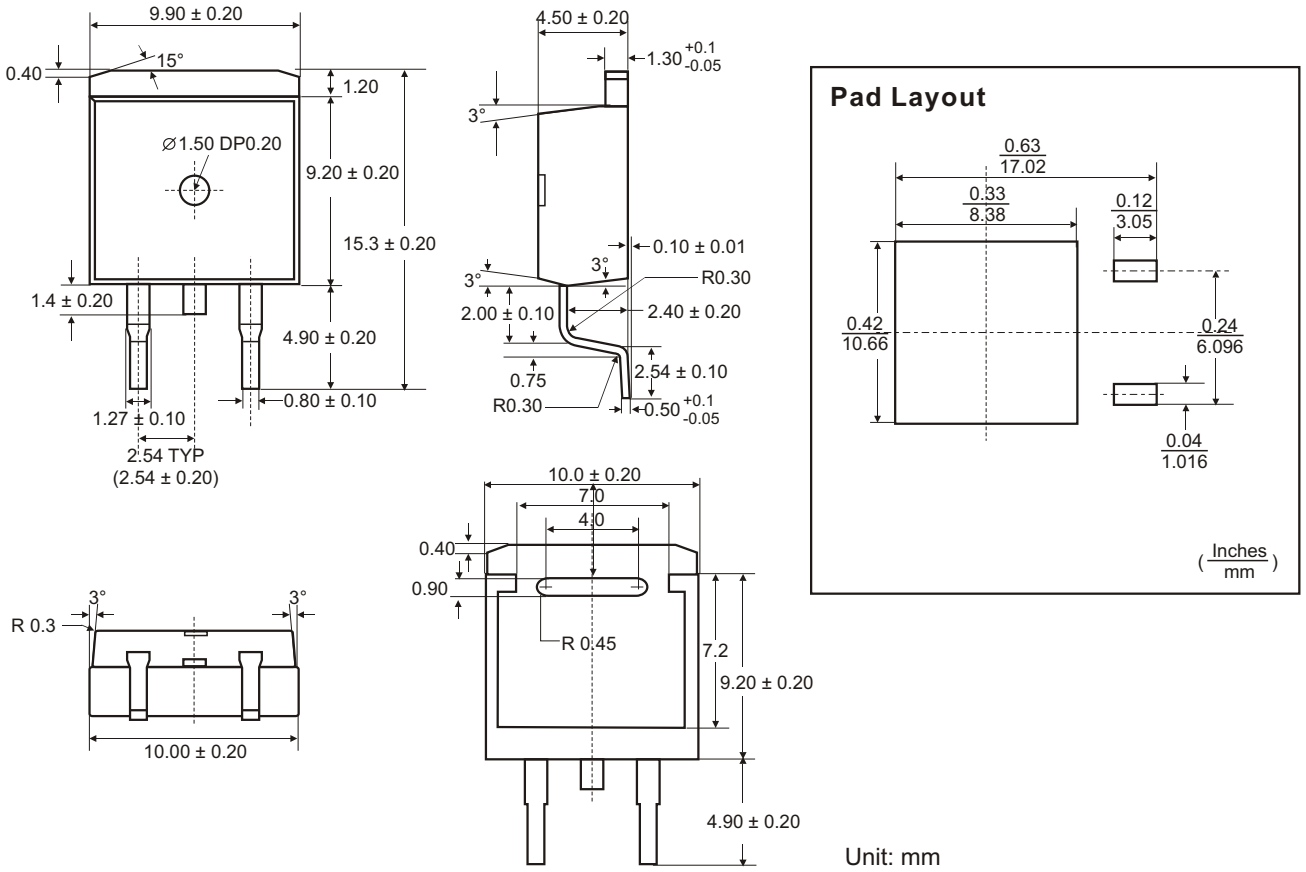

Unit: mm

◆ ORDERING NUMBER

GM R 10 H 150 C TA3 T

- GM — Gamma Micro.
- R — Rectifier
- 10 — Current Rating 10: 10A
- H — Low V_f family
- 150 — Voltage Rating 150: 150V
- C — Dual Cathode Common
- TA3 — Package TA3: TO-263-2, TB3: TO-220AB, TBF3: TO-220FPAB
- T — Shipping T: Tube, R: Tape & Reel

GAMMA Micro, and are registered trademarks of GAMMA MICROELECTRONICS INC.
GAMMA reserves the right to make changes without further notice to any products herein.
Information provided herein is alleged to be exact and consistent and this publication surpasses and replaces all information previously supplied.

GAMMA makes no warranty the suitability of its products for any particular purpose, nor does GAMMA assume any liability arising out of the application or use of any product or circuit, and specifically disclaims any and all liability including without limitation special, consequential or incidental damages.

GAMMA products are not authorized for using as critical components in life support devices or systems without prior written approval from GAMMA MICROELECTRONICS INC.