CUI INC

Part No: GF0501

Description: speaker

Date: 9/20/2006
Unit: mm

RoHS

Specifications

Nominal Size	50 mm (2.00 in)	(See attached drawing)		
Impedance	8 Ohm ± 15%	at	800 Hz 1 V	
Resonant frequency	450 Hz ± 90 Hz	at	1 V	
Sound pressure level	87 dB/w ± 3 dB	0.25 w 50 cm ave. at 1.0K, 1.4K, 1.7K, 2.0K Hz		
Response	Fo Hz ~ 5.9 KHz max 10 dB			
Input power	Nominal	0.25 W	Handling capacity	0.5 W
Operation	must be normal at program source 0.25 W			
Buzz, rattle, etc.	must be normal at sine wave 1.41 V			
Magnet	Size: 32 x 18 x 6 mm			
Load test	White noise	0.25 W	for	24 hours
Heat test	70 ± 2° C	20-50% R.H.		24 hours
Humidity test	40 ± 2° C	90-95% R.H.		24 hours

Frequency Response Curve

Potentiometer range	50 dB
Rectifier	RMS
Lower limit frequency	20 Hz
Wr. speed	100 mm/sec

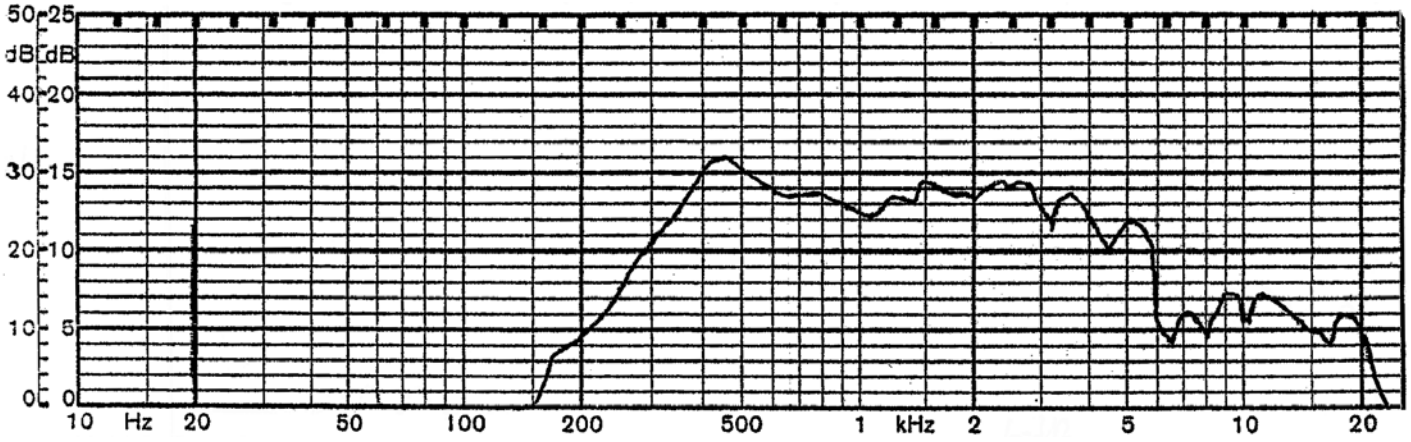

Zero level 60 dB

REV.	DESCRIPTION	DATE
A	NEW DRAWING	8/8/2006

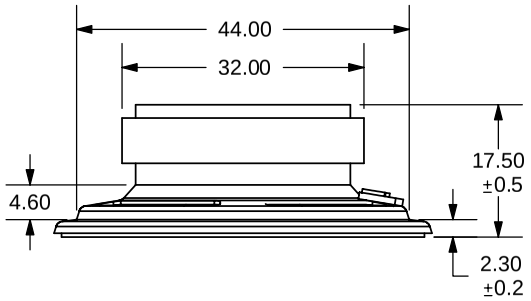

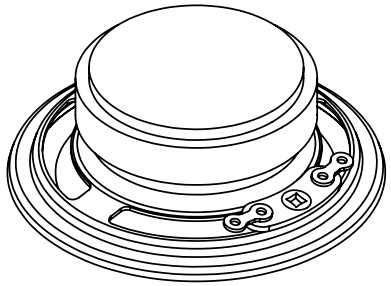

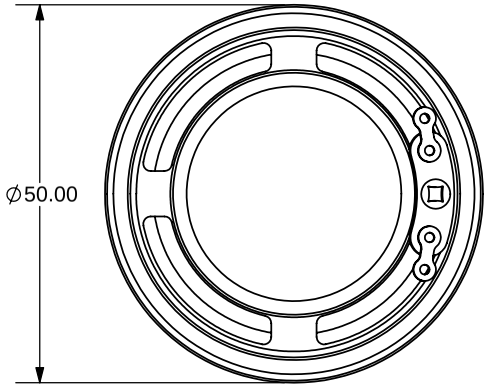

TOLERANCE:
±0.3mm UNLESS OTHERWISE SPECIFIED

RoHS

CUI INC

20050 SW 112th Ave.
Tualatin, OR 97062
Phone: 503-643-4899
800-275-4899
Fax: 503-372-1266
Website: www.cui.com

TITLE:	REV:
Round frame paper cone - ferrite magnet	A
PART NO.: GF0501	UNITS: MM [INCHES]
DRAWN BY: ZRJ	APPROVED BY:
	SCALE: 1:1

PC FILE NAME: GF0501

COPYRIGHT 2006 BY CUI INC.

For more information, please visit the product page.