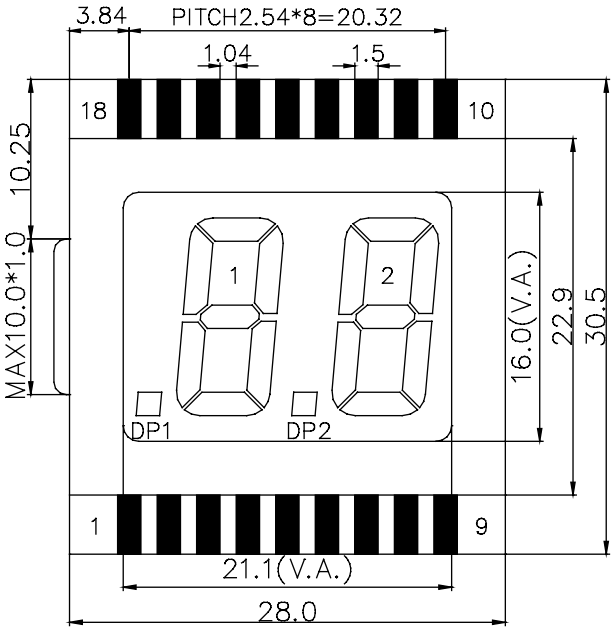

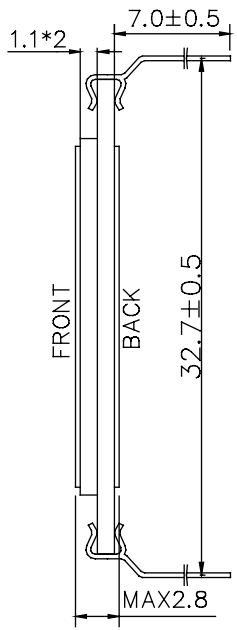

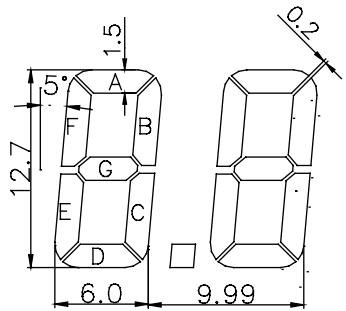

PIN	1	2	3	4	5	6	7	8	9	10	11	12	13	14	15	16	17	18
COM	COM	DP1	1E	1D	1C	DP2	2E	2D	2C	2B	2A	2F	2G	1B	1A	1F	1G	COM

NOTE:

1. TOLERANCES UNLESS OTHERWISE SPECIFIED: ±0.20
2. VIEWING ANGLE: 6 O'CLOCK
3. DISPLAY MODE: REFLECTIVE
4. DUTY CYCLE: STATIC
5. DRIVING VOLTAGE: 3.0V
6. OPERATING TEMPERATURE: −30°C TO 80°C
7. STORAGE TEMPERATURE: −30°C TO 80°C

AZ DISPLAYS, INC.		
DRAWN BY: X.J.	TITLE:	SCALE:
CHECKED BY: H.L.P.		UNIT: MM
APP BY:	GD-1028P	SIZE:
DATE: MAR.31.99	SHEET 1 OF 1	