GC2510 – GC2546

POWER GENERATION
Step Recovery Diodes

RoHS Compliant e4

DESCRIPTION

The GC2500 series step recovery diodes are epitaxial silicon varactors which provide high output power and efficiencies in harmonic generator applications. Strict material and process controls result in high reproducibility. A unique silicon dioxide passivation process assures greater reliability and low leakage currents at high temperatures.

Diodes are available in various capacitance ranges for each of the 4 voltage ratings. These diodes represent the lowest transition time (snap time) available for each voltage rating. Unless otherwise specified, capacitance will be within the range shown below for each type. A capacitance tolerance of ±10% is available at an additional charge. Diodes can be optimized for custom electrical or mechanical specifications. Custom parameters for capacitance, voltage, transition time, series resistance, etc. are available upon request. All specifications shown above are based on the style 30 package. Many packages options are available, including 150A, 35, 36, 42 and 56. Chip mounted on carriers with gold wire/ribbon leads are also available. Other package styles are available to meet specific requirements. Some limitations apply. Contact Microsemi for details.

APPLICATIONS

The GC2500 series of step recovery varactors are used as harmonic generators for all orders of multiplication X2 through X20 for both narrow and wide bandwidths. Applications include local oscillators, voltage controlled oscillators, frequency synthesizers, and up converters. They are also used in comb generators to generate a broad frequency spectrum and in high speed pulse shaping circuits.

KEY FEATURES

- X2 Through X20 Harmonics Generation
- Excellent Efficiency
- High Output Power
- RoHS Compliant[1]

APPLICATIONS/BENEFITS

- Harmonics Generation
- Local Oscillators
- Frequency Synthesizers
- Up Converters

ABSOLUTE MAXIMUM RATINGS AT 25º C (UNLESS OTHERWISE SPECIFIED)

Rating	Symbol	Value	Unit
Maximum Leakage Current @80% of Minimum Rated V_B	I_R	50	nA
Storage Temperature	T_{STG}	-65 to +150	ºC
Operating Temperature	T_{OP}	-55 to +125	ºC

IMPORTANT: For the most current data, consult our website: ***www.MICROSEMI.com***
Specifications are subject to change, consult the factory for further information.

These devices are ESD sensitive and must be handled using ESD precautions.

[1] The GC2500 Series of products are supplied with a RoHS complaint Gold finish.

Copyright © 2007
Rev.: 2009-02-03

Microsemi
Microwave Products
75 Technology Drive, Lowell, MA. 01851, 978-442-5600, Fax: 978-937-3748

CHIP ELECTRICAL PARAMETERS @ 25°C (unless otherwise specified)

Model Number	V_b(V) I_R=10µA (Min)	C_j(pF)[1] @-6V	T_L(ns)[2] (Min)	T_T(ps) (Typ)	R_s(Ω)[3] @25 mA (Max)	θP[1](°C/W)[4] (Max)
GC2510	15	0.2-0.4	8	60	1.2	125
GC2511	15	0.4-0.6	8	60	1.0	100
GC2512	15	0.6-0.8	8	60	0.7	100
GC2513	15	0.8-1.0	8	60	0.5	75
GC2514	15	1.0-1.4	8	60	0.4	75
GC2515	15	1.4-2.0	8	60	0.3	60
GC2516	15	2.0-3.0	8	60	0.25	60
GC2520	20	0.2-0.4	11	70	1.0	100
GC2521	20	0.4-0.6	11	70	0.7	75
GC2522	20	0.6-0.8	11	70	0.6	75
GC2523	20	0.8-1.0	11	70	0.5	75
GC2524	20	1.0-1.4	11	70	0.4	75
GC2525	20	1.4-2.0	11	70	0.3	60
GC2526	20	2.0-3.0	11	70	0.25	60
GC2530	30	0.2-0.4	17	100	0.8	75
GC2531	30	0.4-0.6	17	100	0.6	60
GC2532	30	0.6-0.8	17	100	0.5	60
GC2533	30	0.8-1.0	17	100	0.4	60
GC2534	30	1.0-1.4	17	100	0.3	60
GC2535	30	1.4-2.0	17	100	0.25	50
GC2536	30	2.0-3.0	17	100	0.2	50
GC2540	40	0.2-0.4	21	150	0.8	60
GC2541	40	0.4-0.6	21	150	0.6	50
GC2542	40	0.6-0.8	21	150	0.5	50
GC2543	40	0.8-1.0	21	150	0.4	50
GC2544	40	1.0-1.4	21	150	0.3	50
GC2545	40	1.4-2.0	21	150	0.25	40
GC2546	40	2.0-3.0	21	150	0.2	40

Notes:

1. Junction capacitance is measure at 1 MHz.
2. Carrier lifetime is measure at I_F = 10mA, I_R = 6mA .
3. Series resistance is measure using a transmission loss technique @ 1 GHz.
4. Thermal resistance is measure using pulsed conditions while measuring forward voltage drop across the diode mounted in an infinite heat sink.

www.MICROSEMI.com

Typical Package Options

PACKAGE STYLE 00

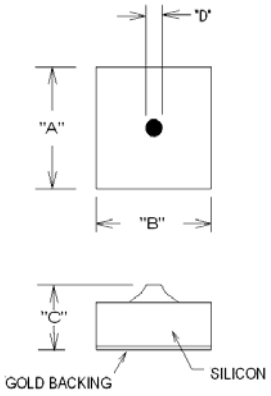

Notes:

- Dimensions vary by model number
- Consult factory for details
- Order as GC25xx – 00

PACKAGE STYLE 17

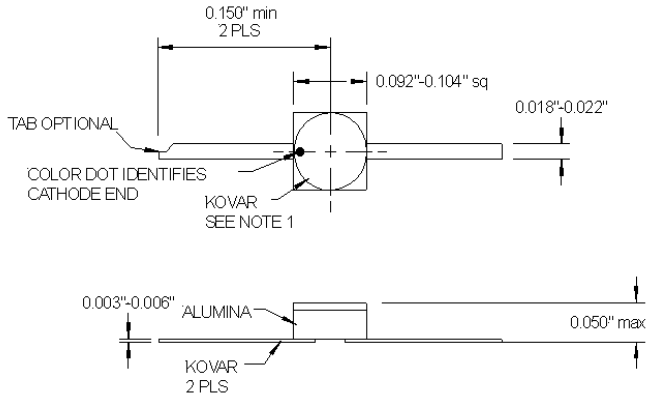

PACKAGE STYLE 30

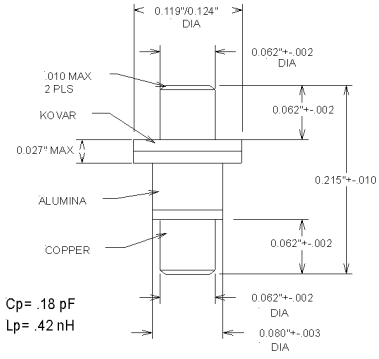

PACKAGE STYLE 42

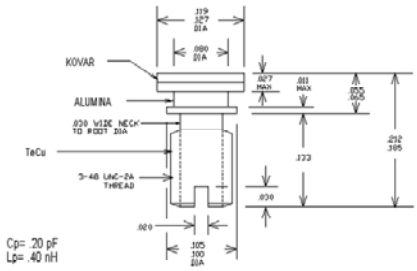

OTHER PACKAGE STYLES AVAILABLE ON REQUEST
CONSULT FACTORY

Copyright © 2007
Rev.: 2009-02-03