Single Cell Li-Ion Battery Linear Charger

Features

- **No External Power MOSFET, Sense Resistor or Blocking Diode Required**
- **1% Regulation Voltage Accuracy**
- **Charge Single Cell Li-ion Battery from AC Adapter or USB Port**
- **Programmable Constant Charge Current Limit up to 2A**
- **Automatic Recharge**
- **Complete Pre-Charge, Constant Current, Constant Voltage and Charge Termination Charge Procedure**
- **NTC Thermistor Interface for Battery Temperature Detection**
- **Internal input Overvoltage Lockout Protection Circuit (VIN >6.5V)**
- **Support for 5V Power Supply Voltage**
- **Internal Thermal Protection Circuit**
- **TDFN3X3-10, TQFN3X3-16 and TQFN4X4-16 Package Available**

Applications

- **MP3 Players**
- **Cellular Phones**
- **PDAs**
- **Hand-Held Devices**

General Description

The G5808 is a complete standalone linear Li-Ion battery charger with a complete pre-charge, constant-current and constant-voltage charge loop.

No external power MOSFET, sense resistor and blocking diode is required due to internal power MOSFET architecture. The charge voltage is regulated at 4.2V, and the charge current is programmable by an external resistor up to 2A. After the final regulation voltage is reached and the charge current drops to the programmed end-of-charge current, the open drain NMOS $\overline{\text{STATUS}}$ pin would be turn off automatically and the charge loop would be terminated after timeout.

Other features include under voltage lockout, automatic recharge, an NTC thermistor interface for charging the battery in a safe range, over temperature protection and two charge status indication pins.

Ordering Information

ORDER NUMBER	MARKING	TEMP. RANGE	PACKAGE (Green)
G5808RE1U	5808	-40°C~ 85°C	TDFN3X3-10
G5808R41U	5808	-40°C~ 85°C	TQFN3X3-16
G5808R81U	5808	-40°C~ 85°C	TQFN4X4-16

Note: RE: TDFN3X3-10 R4:TQFN3X3-16
R8:TQFN4X4-16
1: Bonding Code
U: Tape & Reel

Pin Configuration

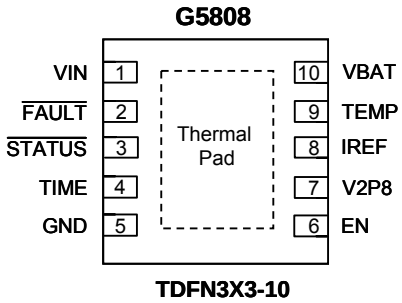

TDFN3X3-10

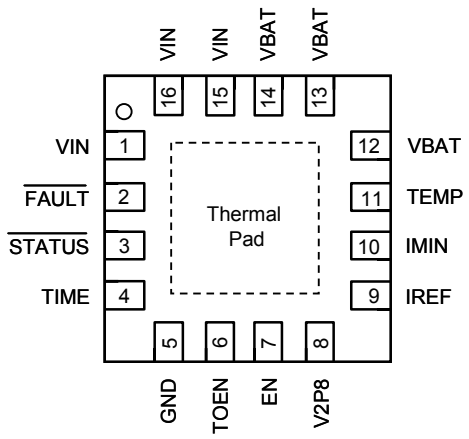

G5808 TQFN3X3-16/TQFN4X4-16

Note: Recommend connecting the Thermal Pad to the Ground or let it keep floating.