G431

Adjustable Shunt Regulator

Description

The G431 series are three-terminal adjustable regulators with guaranteed thermal stability over applicable temperature ranges. The output voltage may be set to any value between VREF (approximately 2.495v) and 36v with two external resistors. It provides very wide applications, including shunt regulator, series regulator, switching regulator, voltage reference and others.

Package Dimensions

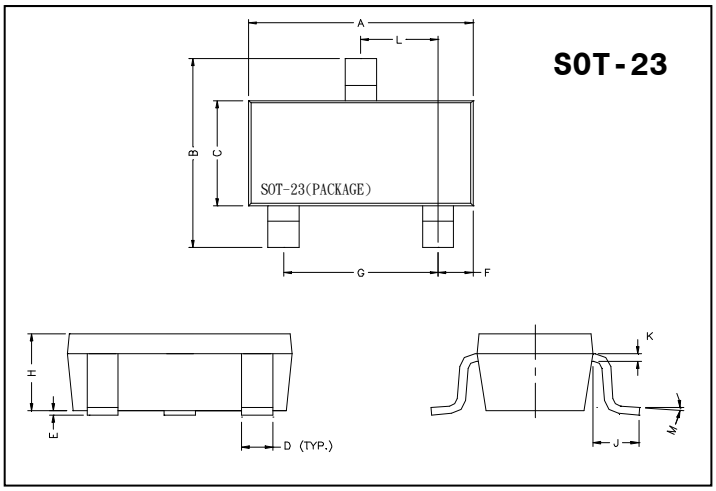

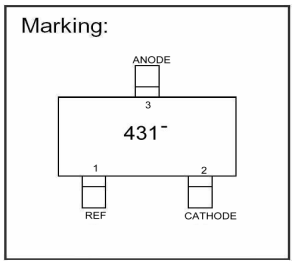

REF.	Millimeter		REF.	Millimeter	
	Min.	Max.		Min.	Max.
A	2.70	3.10	G	1.90	REF.
B	2.40	2.80	H	1.00	1.30
C	1.40	1.60	K	0.10	0.20
D	0.35	0.50	J	0.40	-
E	0	0.10	L	0.85	1.15
F	0.45	0.55	M	0°	10°

Absolute Maximum Ratings at Ta = 25℃

Parameter	Symbol	Ratings	Unit
Junction Temperature	Tj	+150	℃
Storage Temperature	Tstg	-65 ~ +150	℃
Cathode Voltage	V_{KA}	37	V
Cathode Current Range(Continuous)	I_{KA}	-100~+150	mA
Reference Input Current Range	I_{REF}	-0.05~+10	mA
Total Power Dissipation	PD	225	mW

Characteristics at Ta = 25℃

Parameter		Symbol	Min	Typ.	Max.	Unit	Test Conditions	
Cathode Voltage		V_{KA}	V_{REF}	-	36	V		
Cathode Current		I_{KA}	1	-	100	mA		
Reference Input Voltage	G431C	V_{REF}	2.445	2.495	2.545	V	V_{KA}= V_{REF},I_K=10mA	
	G431B		2.470	2.495	2.520			
	G431A		2.483	2.495	2.507			
Deviation of reference Input Voltage Over temperature(note)		$\Delta V_{REF}/\Delta T$	-	4.5	17	mV	V_{KA}=V_{REF},I_K=10mA Tmin≦Ta≦Tmax	
Ratio of Change in Reference Input Voltage to the Change in Cathode Voltage		$\Delta V_{REF}/\Delta V_{KA}$	-	-1.0	-2.7	mV/V	I_K=10mA	ΔV_{KA}=10V~V_{REF}
			-	-0.5	-2.0			ΔV_{KA}=36V~10V
Reference Input Current		I_{REF}	-	1.5	4	uA	I_K=10mA,R1=10KΩ,R2=∞	
Deviation of reference Input Current Over Full Temperature Range		$\Delta I_{REF}/\Delta T$	-	0.4	1.2	uA	I_K=10mA,R1=10KΩ,R2=∞ TA=Full Temperature	
Minimum Cathode Current for Regulation		I_{KA}(min)	-	0.45	1.0	mA	V_{KA}=VREF	
Off-State Cathode Current		I_{KA}(off)	-	0.05	1.0	uA	V_{KA}=36V,V_{REF}=0	
Dynamic Impedance		$\lvert Z_{KA} \rvert$	-	0.15	0.5	Ω	V_{KA}=V_{REF},I_K=1 to 100mA,F≤1.0KHz	

Note: Tmin= 0℃,Tmax=+70℃

Functional Block Diagram & Symbol

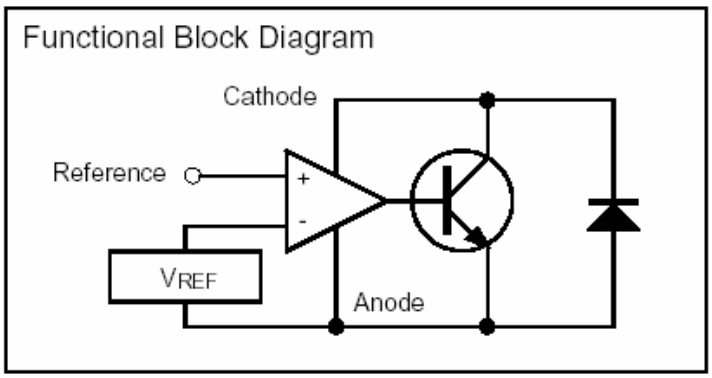

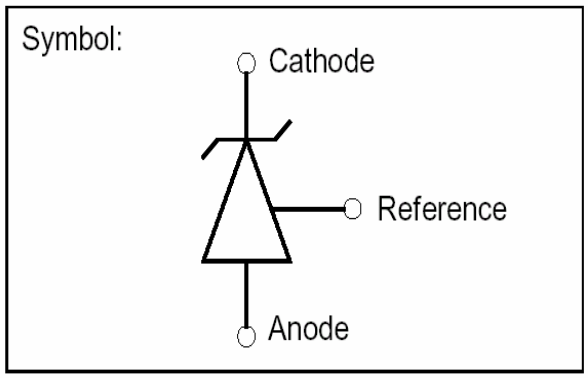

Test Circuits

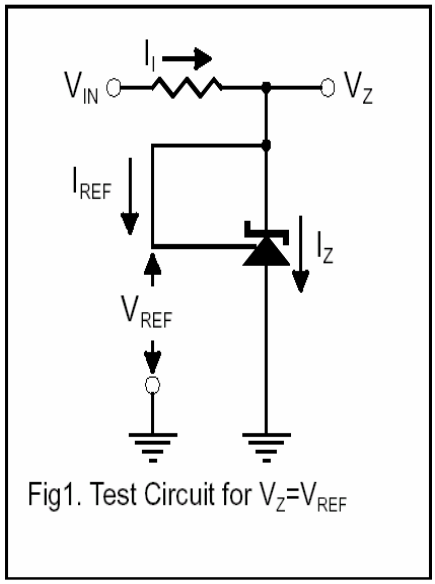

Fig1. Test Circuit for $V_Z=V_{REF}$

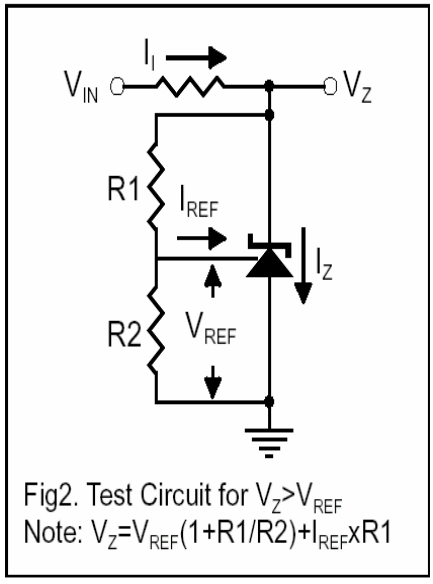

Fig2. Test Circuit for $V_Z>V_{REF}$
Note: $V_Z=V_{REF}(1+R1/R2)+I_{REF}xR1$

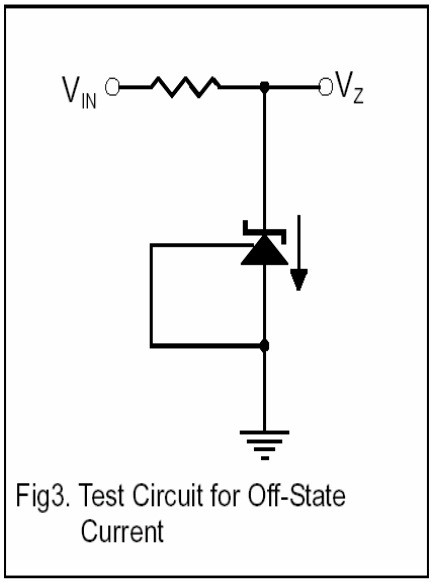

Fig3. Test Circuit for Off-State Current

Characteristics Curve

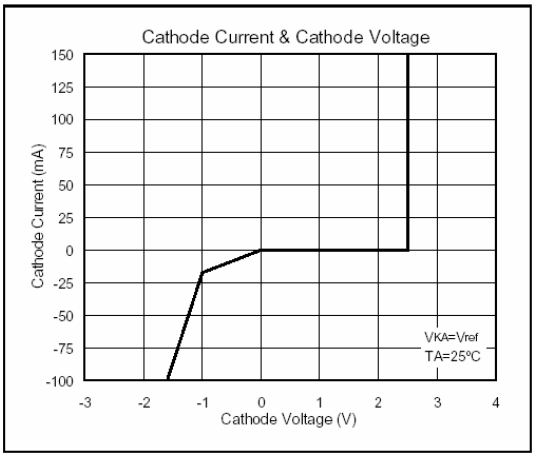

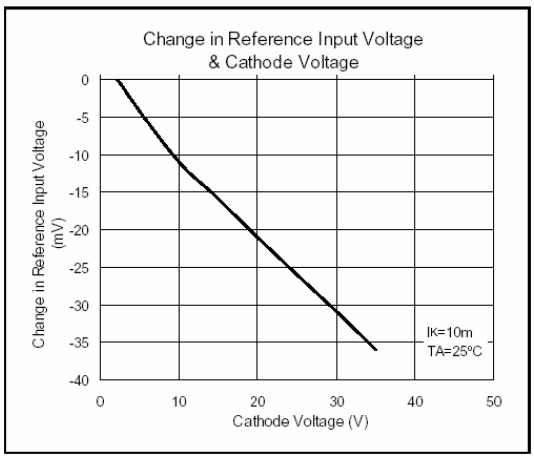

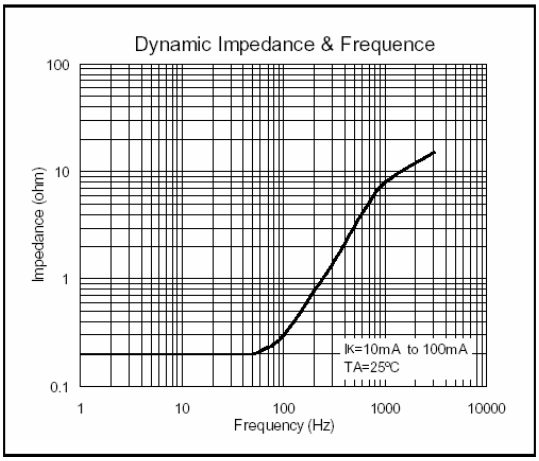

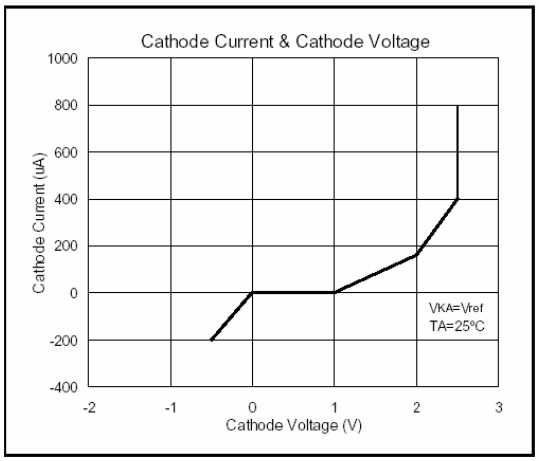

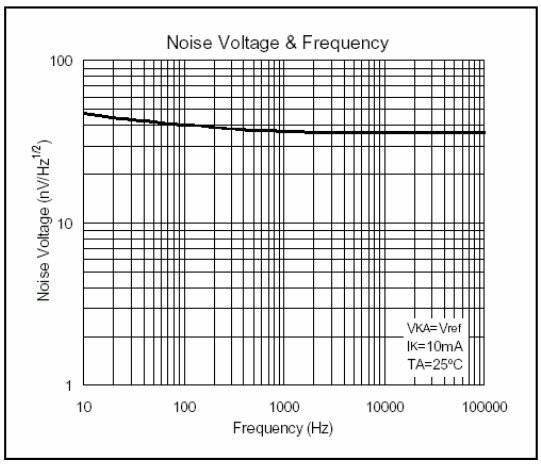

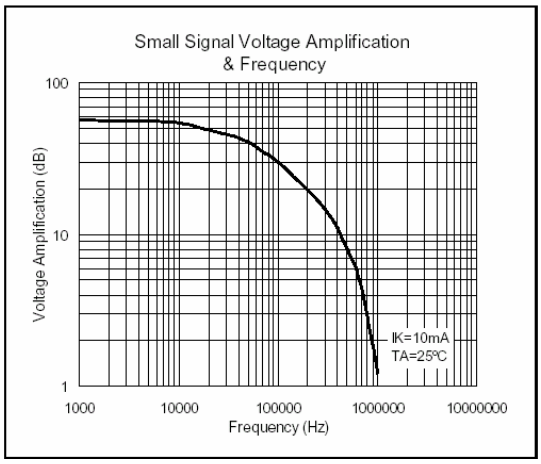

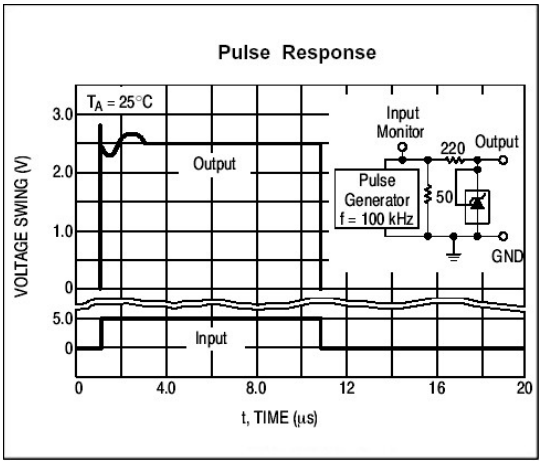

Important Notice:
- All rights are reserved. Reproduction in whole or in part is prohibited without the prior written approval of GTM.
- GTM reserves the right to make changes to its products without notice.
- GTM semiconductor products are not warranted to be suitable for use in life-support Applications, or systems.
- GTM assumes no liability for any consequence of customer product design, infringement of patents, or application assistance.

Head Office And Factory:
- **Taiwan**: No. 17-1 Tatung Rd. Fu Kou Hsin-Chu Industrial Park, Hsin-Chu, Taiwan, R. O. C.
  TEL : 886-3-597-7061 FAX : 886-3-597-9220, 597-0785
- **China**: (201203) No.255, Jang-Jiang Tsai-Lueng RD. , Pu-Dung-Hsin District, Shang-Hai City, China
  TEL : 86-21-5895-7671 ~ 4 FAX : 86-21-38950165