G2997B

DDR Termination Regulator

Features

- **Support DDR I (1.25VTT), DDR II (0.9 VTT), DDR III (0.75 VTT), and DDR IIIL (0.675VTT) Requirements**
- **Input Voltage Range: 3V to 5.5V**
- **VLDOIN Voltage Range: 1.2V to 3.6V**
- **Requires Only 20µF Ceramic Output Capacitance**
- **Supports High-Z in S3 and Soft-Off in S5**
- **Integrated Divider Tracks 1/2 VDDQSNS for Both VTT and VTTREF**
- **Remote Sensing (VTTSNS)**
- **±20mV Accuracy for VTT and VTTREF**
- **10mA Buffered Reference (VTTREF)**
- **Built-In Soft-Start**
- **Over Current Protection**
- **Thermal Shutdown Protection**
- **MSOP-10 & MSOP-10 (FD) Package**

Applications

- **DDR I/II/III/IIIL Memory Termination**
- **SSTL−2, SSTL−18**
- **HSTL Termination**

General Description

The G2997B is a 2A sink/source tracking termination regulator. It is specifically designed for low-cost/ low-external component count systems. The G2997B maintains a high speed operational amplifier that provides fast load transient response and only requires 20µF (2x10µF) of ceramic output capacitance. The G2997B supports remote sensing functions and all features required to power the DDR I / DDR II /DDRIII /DDR IIIL VTT bus termination according to the JEDEC specification. In addition, the G2997B includes integrated sleep-state controls placing VTT in High-Z in S3 (suspend to RAM) and soft-off for VTT and VTTREF in S5 (Shutdown). The G2997B is available in MSOP-10 and MSOP-10 (FD).

Ordering Information

ORDER NUMBER	MARKING	TEMP. RANGE	PACKAGE (Green)
G2997BP71U	G2997	-40°C~85°C	MSOP-10
G2997BF61U	G2997B	-40°C~85°C	MSOP-10 (FD)

Note: P7: MSOP-10 F6: MSOP-10 (FD)
1: Bonding Code
U: Tape & Reel

Pin Configuration

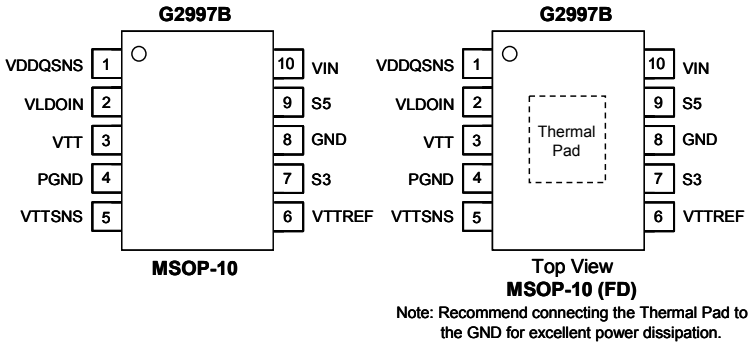

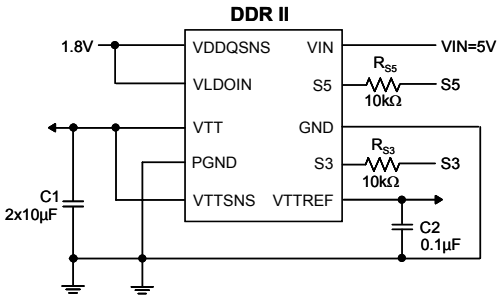

Typical Application Circuit

