DATA DISPLAY GROUP

Datasheet

CHIMEI Innolux

G070Y2-L01

CH-01-023 R1.1

The information contained in this document has been carefully researched and is, to the best of our knowledge, accurate. However, we assume no liability for any product failures or damages, immediate or consequential, resulting from the use of the information provided herein. Our products are not intended for use in systems in which failures of product could result in personal injury. All trademarks mentioned herein are property of their respective owners. All specifications are subject to change without notice.

Doc. Number :

☐ Tentative Specification
☐ Preliminary Specification
■ Approval Specification

MODEL NO.: G070Y2
SUFFIX: L01

Customer:

APPROVED BY **SIGNATURE**

Name / Title
Note

Please return 1 copy for your confirmation with your signature and comments.

核准時間	部門	審核	角色	投票
2011-08-24 16:09:06	APPL 產品管理處	yuhsiang.chang (張喻翔/514-10922)	Director	Accept

The copyright belongs to CHIMEI InnoLux. Any unauthorized use is prohibited.

- CONTENTS -

REVISION HISTORY ---------- 3

1. GENERAL DESCRIPTION ---------- 4
   1.1 OVERVIEW
   1.2 FEATURES
   1.3 APPLICATION
   1.4 GENERAL SPECIFICATIONS
   1.5 MECHANICAL SPECIFICATIONS

2. ABSOLUTE MAXIMUM RATINGS ---------- 6
   2.1 ABSOLUTE RATINGS OF ENVIRONMENT
   2.2 ELECTRICAL ABSOLUTE RATINGS
      2.2.1 TFT LCD MODULE
      2.2.2 LED CONVERTER

3. ELECTRICAL CHARACTERISTICS ---------- 8
   3.1 RECOMMENDED OPERATIN CONDITION
   3.2 BACKLIGHT UNIT

4. BLOCK DIAGRAM ---------- 11
   4.1 TFT LCD MODULE

5. INPUT TERMINAL PIN ASSIGNMENT ---------- 12
   5.1 LVDS I/O PIN ASSIGNMENT
   5.2 BACKLIGHT PIN ASSIGNMENT
   5.3 SCANNING DIRECTION
   5.4 COLOR DATA INPUT ASSIGNMENT

6. INTERFACE TIMING ---------- 16
   6.1 TIMING CHARACTERISTICS
   6.2 LVDS INPUT DATA FORMAT
   6.3 POWER ON/OFF SEQUENCE

7. OPTICAL CHARACTERISTICS ---------- 19
   7.1 TEST CONDITIONS
   7.2 OPTICAL SPECIFICATIONS

8. RELIABILITY TEST ---------- 22
   8.1RELIABILITY TEST CONDITION

9. PACKAGING ---------- 23

10. DEFINTION OF LABELS ---------- 25

11. PRECATIONS ---------- 26

12. MECHANICAL CHARACTERISTICS ---------- 27

The copyright belongs to CHIMEI InnoLux. Any unauthorized use is prohibited.

REVISION HISTORY

Version	Date	Section	Description
Ver 2.0	Oct. 30, '09	All	G070Y2-L01 Approval specification was first issued.
Ver 2.1	May.13, 10	1.4	Module Power Consumption from 3.56 W to 3.71 W
		3.2	Converter Power Supply Current from 0.25A to 0.263mA Converter Power Consumption from 3W to 3.15W Note(2) I_L = 60 mA(Per EA) change to I_L = 55 mA(Per EA)
		7.1	TEST CONDITIONS Current from 60±4mA to 55±3mA
Ver 2.2	Sep. 9, 10	1.4	Module Power consumption 3.71W ->4.04W
		3.1	Power Supply Current White 140mA -> 250mA Black 170mA -> 270mA
		3.2	Add Note(3)
Ver 2.3	Dec. 1, 10	6.1	Clock Frequency $1/T_{clock}$: Min. 27 MHz -> 28 MHz Max. 33 MHz -> 32MHz
Ver 2.4	Aug. 23, 10	2.2.2	Enable Voltage Max. from 4 to 5 Backlight Adjust Max. from 3.3 to 5
		3.2	EN Control Level / Backlight on max. from 3.3 to 5 PWM Control Level / PWM High Level max. from 3.3 to 5 PWM Control Duty Ratio min. from 20 to 10 PWM Control Frequency min. from 190 to 100 max. from 210 to 300

The copyright belongs to CHIMEI InnoLux. Any unauthorized use is prohibited.

1. GENERAL DESCRIPTION

1.1 OVERVIEW

G070Y2-L01 is a 7inch TFT Liquid Crystal Display module with a LED backlight unit and a-20pin 6/8bit LVDS interface controller board. The converter for the LED Backlight Unit is built in. This module supports 800 (R.G.B)x 480 WVGA mode which main application is the automotive display and industrial field.

1.2 FEATURES

- Wide viewing angle.
- Fast response time
- Wide operating temperature
- Reversible scan function
- 6/8 bit convertible
- High Color gamut (NTSC：72%)

1.3 APPLICATION

- Automotive Display
- Industry Application

1.4 GENERAL SPECIFICATI0NS

Item	Specification	Unit	Note
Diagonal Size	7	inch	
Active Area	152.4x91.44	mm	(1)
Bezel Opening Area	154.6x93.64	mm	
Driver Element	a-si TFT active matrix	-	-
Pixel Number	800 x R.G.B. x 480	pixel	-
Pixel Pitch	0.1905 x 0.1905	mm	-
Pixel Arrangement	RGB vertical stripe	-	(2)
Display Colors	262k or 16.2M	color	-
Display Mode	Normal White	-	-
Surface Treatment	Anti-glare, Hard Coating (3H)	-	-
Module Power Consumption	4.04	W	Typ.

Note (1) Please refer to the attached drawings for more information of front and back outline dimensions.

The copyright belongs to CHIMEI InnoLux. Any unauthorized use is prohibited.

Note (2)

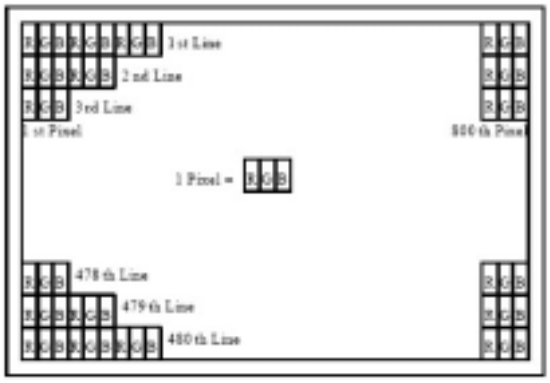

1.5 MECHANICAL SPECIFICATIONS

Item		Min.	Typ.	Max.	Unit	Note
Module Size	Horizontal (H)	164.3	165	165.3	mm	(1)
	Vertical (V)	103.3	104	104.3	mm	
	Depth (D)	9.03	9.53	10.03	mm	
Weight			147	162	g	

Note (1) Please refer to the attached drawings for more information of front and back outline dimensions.

The copyright belongs to CHIMEI InnoLux. Any unauthorized use is prohibited.

2. ABSOLUTE MAXIMUM RATINGS

2.1 ABSOLUTE RATINGS OF ENVIRONMENT

Item	Symbol	Value		Unit	Note
		Min.	Max.		
Operating Ambient Temperature	T_{OP}	-30	+85	ºC	
Storage Temperature	T_{ST}	-40	+95	ºC	

Note (1) Temperature and relative humidity range is shown in the figure below.

(2) Wet-bulb temperature should be 39 ºC Max. (Ta > 40 ºC).

(3) No condensation.

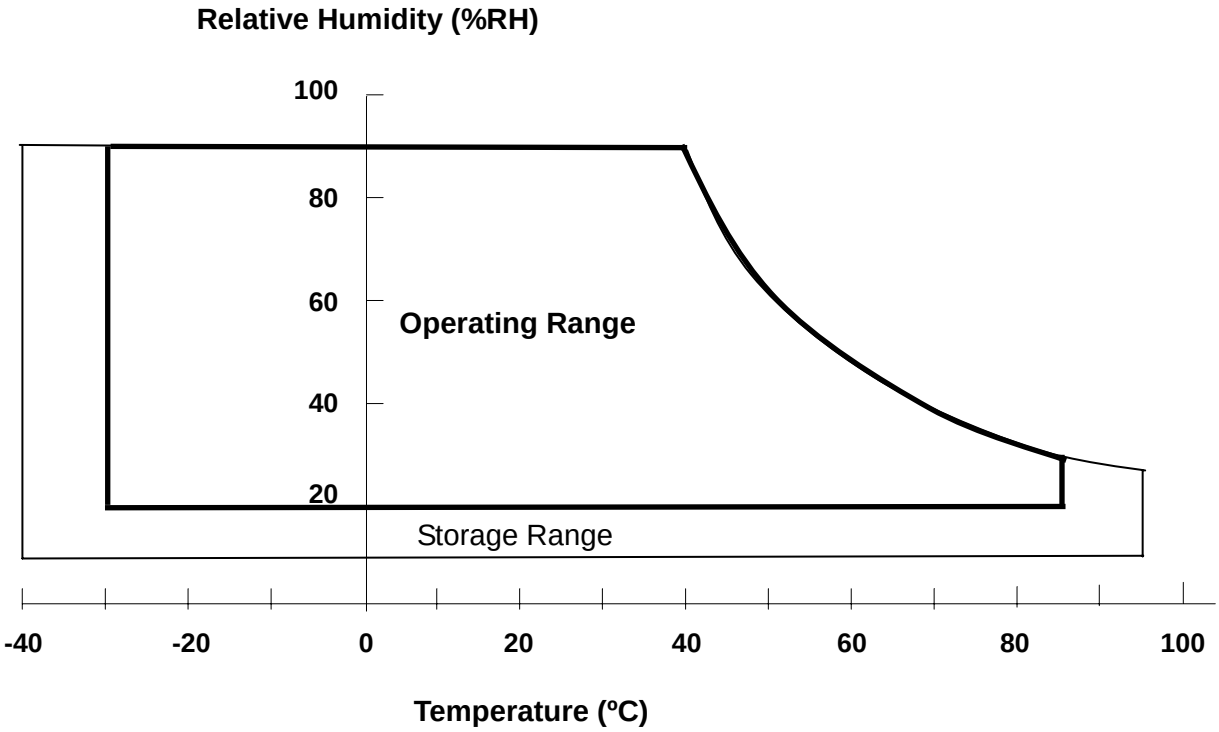

The copyright belongs to CHIMEI InnoLux. Any unauthorized use is prohibited.

2.2 ELECTRICAL ABSOLUTE RATINGS

2.2.1 TFT LCD MODULE

Ta = 25 ± 2 ºC

Item	Symbol	Value		Unit	Note
		Min.	Max.		
Power Supply Voltage	Vcc	-0.3	4	V	(1)

2.2.2 LED CONVERTER

Item	Symbol	Value		Unit	Note
		Min.	Max.		
Converter Voltage	V_i	-0.3	18	V	(1) , (2)
Enable Voltage	EN	---	5	V	
Backlight Adjust	ADJ	---	5	V	

Note (1) Permanent damage to the device may occur if maximum values are exceeded. Function operation should be restricted to the conditions described under Normal Operating Conditions.

Note (2) Specified values are for LED converter (Refer to 3.2 for further information).

The copyright belongs to CHIMEI InnoLux. Any unauthorized use is prohibited.

3. ELECTRICAL CHARACTERISTICS

3.1 RECOMMENDED OPERATION CONDITION

Ta = 25 ± 2 ºC

Parameter		Symbol	Value			Unit	Note
			Min.	Typ.	Max.		
Power Supply Voltage		Vcc	3.0	3.3	3.6	V	(1)
Rush Current		I_{RUSH}			1.5	A	(2)
Power Supply Current	White			250		mA	(3)a
	Black			270		mA	(3)b
LVDS Differential Input High Threshold		$V_{TH(LVDS)}$			100	mV	-
LVDS Differential Input Low Threshold		$V_{TL(LVDS)}$	-100			mV	-
LVDS Common Mode Voltage		V_{CM}		1.2		V	-

Note (1) The assembly should be always operated within above ranges.

Note (2) Measurement Conditions:

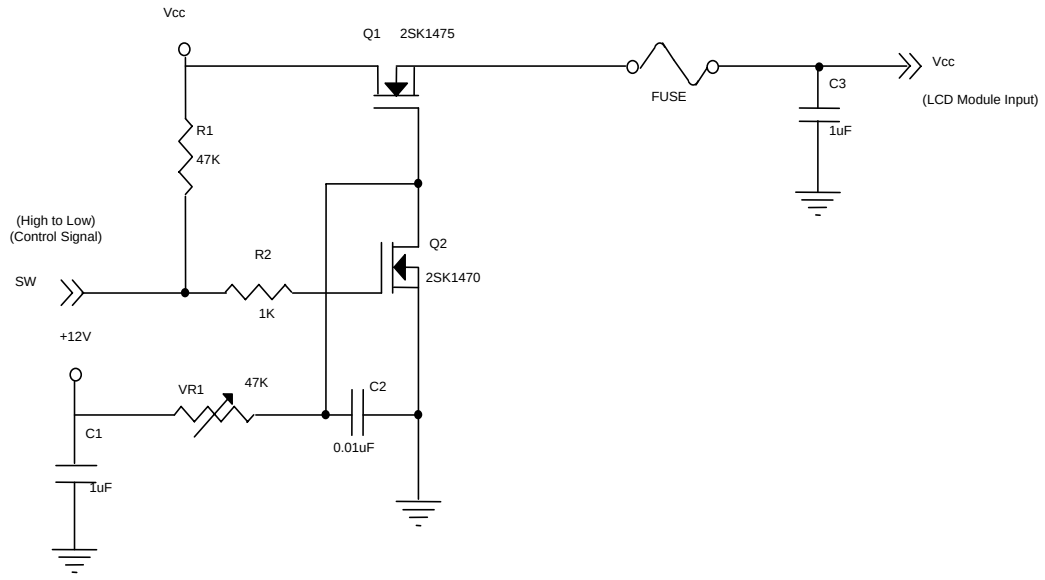

Vcc rising time is 470µs

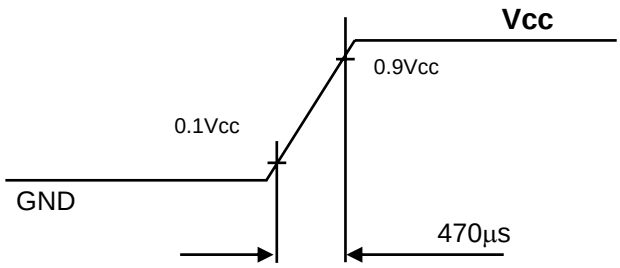

The copyright belongs to CHIMEI InnoLux. Any unauthorized use is prohibited.

Note (3) The specified power supply current is under the conditions at Vcc = 3.3V , Ta = 25 ± 2 ºC, f_v = 60 Hz, whereas a power dissipation check pattern below is displayed.

a. White Pattern



Active Area

b. Black Pattern



Active Area

The copyright belongs to CHIMEI InnoLux. Any unauthorized use is prohibited.

3.2 BACKLIGHT UNIT

Ta = 25 ± 2 ºC

Parameter		Symbol	Value			Unit	Note
			Min.	Typ.	Max.		
Converter Power Supply Voltage		V_i	10.8	12.0	13.2	V	
Converter Power Supply Current		I_i	---	0.263	---	A	@ Vi = 12V (Duty 100%)
Converter Power Consumption		P_{LED}	---	3.15	---	W	@ Vi = 12V (Duty 100%)
EN Control Level	Backlight on		2.0	---	5	V	
	Backlight off		0	---	0.8	V	
PWM Control Level	PWM High Level		2.0	---	5	V	
	PWM Low Level		0	---	0.15	V	
PWM Control Duty Ratio			10		100	%	
PWM Control Frequency		f_{PWM}	100	200	300	Hz	
LED Life Time		L_L	50,000			Hrs	(2)

Note (1) LED current is measured by utilizing a high frequency current meter as shown below:

Note (2) The lifetime of LED is defined as the time when it continues to operate under the conditions at Ta = 25 ±2 ℃ and I_{LED} = 55mA_{DC}(LED forward current) until the brightness becomes ≦ 50% of its original value.

Note (3) Please note that LED life will be shorter than the average life described in the specification if operate in higher ambient temperature.

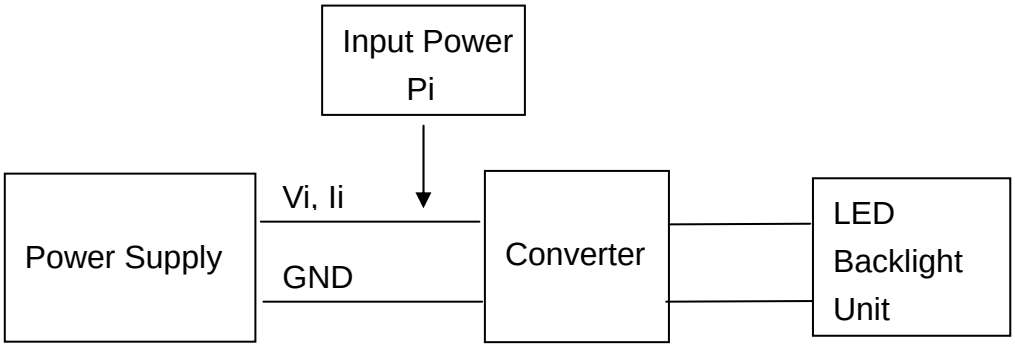

The copyright belongs to CHIMEI InnoLux. Any unauthorized use is prohibited.

4. BLOCK DIAGRAM

4.1 TFT LCD MODULE

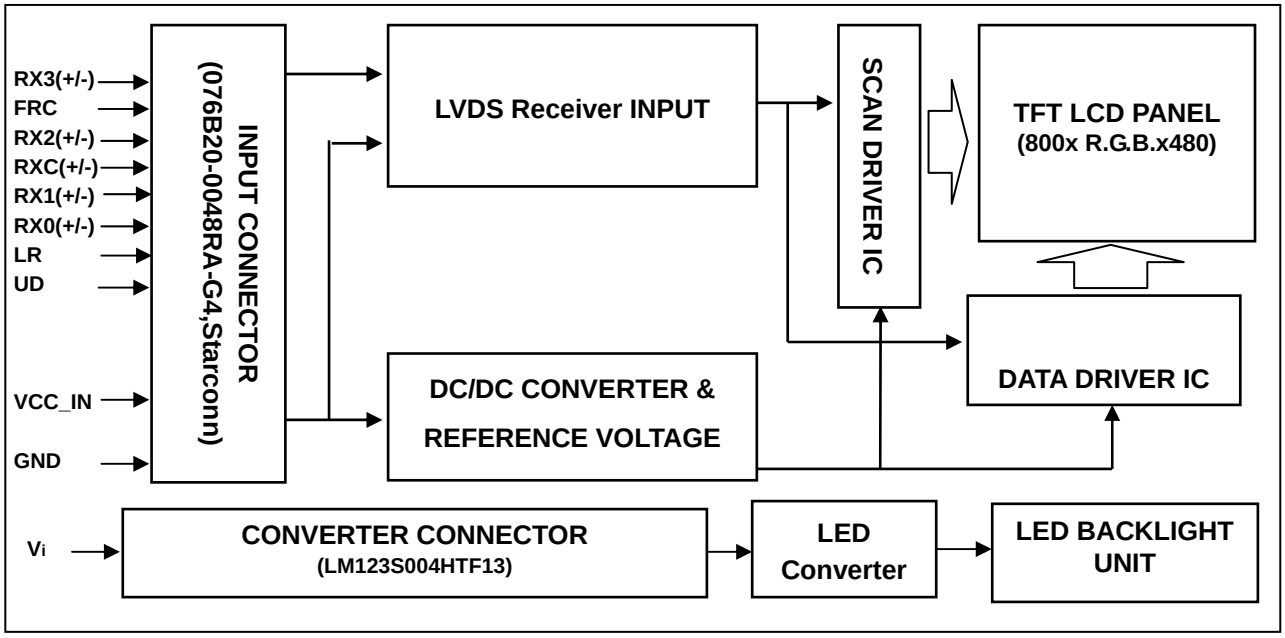

The copyright belongs to CHIMEI InnoLux. Any unauthorized use is prohibited.

5. INPUT TERMINAL PIN ASSIGNMENT

5.1 LVDS I/O PIN ASSIGNMENT

Pin	Name	I/O	Description
1	RX3+	I	LVDS differential data input Pair 3.
2	RX3-	I	
3	NC	I	No Connected
4	FRC	I	Dithering control setting When FRC=H, the width of data input 8 bits When FRC=L, the width of data input 6 bits and set Dx0 and Dx1 to logical low (Default pull low)
5	GND	I	Ground
6	RXC+	I	LVDS differential Clock input Pair
7	RXC-	I	
8	GND	I	Ground
9	RX2+	I	LVDS differential data input Pair 2
10	RX2-	I	
11	GND	I	Ground
12	RX1+	I	LVDS differential data input Pair 1
13	RX1-	I	
14	GND	I	Ground
15	RX0+	I	LVDS differential data input Pair 0
16	RX0-	I	
17	LR	I	Shift direction of Source Driver IC internal shift register is controlled by this pin as show below: LR=H SO1→ ……SO1200 (Default pull high) LR=L SO1200→…….SO1
18	UD	I	Gate Driver Up/down scan setting When UD=H, reverse scan When UD=L, normal scan (Default pull low)
19	VCC_IN	I	Digital power supply (+3.3V)
20	VCC_IN	I	Digital power supply (+3.3V)

Note (1) User's connector Part No.: 076B20-0048RA-G4,Starconn or equivalent

5.2 BACKLIGHT PIN ASSIGNMENT (Converter connector pin)

No	Symbol	I/O	Description
1	Vi	I	Converter input voltage
2	ADJ	I	Backlight Adjust
3	EN	I	Enable pin
4	V_{GND}		Converter ground

Note (1) User's connector Part No: LM123S004HTF13,4 PIN,UNE

The copyright belongs to CHIMEI InnoLux. Any unauthorized use is prohibited.

5.3 SCANNING DIRECTION

The following figures show the image see from the front view. The arrow indicates the direction of scan.

Fig.1 Normal Scan



Fig.2 Reverse Scan



Fig.3 Reverse Scan



Fig.4 Reverse Scan



Fig. 1 Normal scan (pin 17, LR = High ; pin 18, UD = Low)

Fig. 2 Reverse scan (pin 17, LR = Low ; pin 18, UD = Low)

Fig. 3 Reverse scan (pin 17, LR = High ; pin 18, UD = High)

Fig. 4 Reverse scan (pin 17, LR = Low ; pin 18, UD = High)

The copyright belongs to CHIMEI InnoLux. Any unauthorized use is prohibited.

5.4 COLOR DATA INPUT ASSIGNMENT

The brightness of each primary color (red, green and blue) is based on the 6-bit gray scale data input for the color. The higher the binary input, the brighter the color. The table below provides the assignment of color versus data input. (0: Low Level Voltage, 1: High Level Voltage)

Color		Data Signal																	
		Red						Green						Blue					
		R5	R4	R3	R2	R1	R0	G5	G4	G3	G2	G1	G0	B5	B4	B3	B2	B1	B0
Basic Colors	Black	0	0	0	0	0	0	0	0	0	0	0	0	0	0	0	0	0	0
	Red	1	1	1	1	1	1	0	0	0	0	0	0	0	0	0	0	0	0
	Green	0	0	0	0	0	0	1	1	1	1	1	1	0	0	0	0	0	0
	Blue	0	0	0	0	0	0	0	0	0	0	0	0	1	1	1	1	1	1
	Cyan	0	0	0	0	0	0	1	1	1	1	1	1	1	1	1	1	1	1
	Magenta	1	1	1	1	1	1	0	0	0	0	0	0	1	1	1	1	1	1
	Yellow	1	1	1	1	1	1	1	1	1	1	1	1	0	0	0	0	0	0
	White	1	1	1	1	1	1	1	1	1	1	1	1	1	1	1	1	1	1
Gray Scale Of Red	Red(0) / Dark	0	0	0	0	0	0	0	0	0	0	0	0	0	0	0	0	0	0
	Red(1)	0	0	0	0	0	1	0	0	0	0	0	0	0	0	0	0	0	0
	Red(2)	0	0	0	0	1	0	0	0	0	0	0	0	0	0	0	0	0	0
	:	:	:	:	:	:	:	:	:	:	:	:	:	:	:	:	:	:	:
	:	:	:	:	:	:	:	:	:	:	:	:	:	:	:	:	:	:	:
	Red(61)	1	1	1	1	0	1	0	0	0	0	0	0	0	0	0	0	0	0
	Red(62)	1	1	1	1	1	0	0	0	0	0	0	0	0	0	0	0	0	0
	Red(63)	1	1	1	1	1	1	0	0	0	0	0	0	0	0	0	0	0	0
Gray Scale Of Green	Green(0) / Dark	0	0	0	0	0	0	0	0	0	0	0	0	0	0	0	0	0	0
	Green(1)	0	0	0	0	0	0	0	0	0	0	0	1	0	0	0	0	0	0
	Green(2)	0	0	0	0	0	0	0	0	0	0	1	0	0	0	0	0	0	0
	:	:	:	:	:	:	:	:	:	:	:	:	:	:	:	:	:	:	:
	:	:	:	:	:	:	:	:	:	:	:	:	:	:	:	:	:	:	:
	Green(61)	0	0	0	0	0	0	1	1	1	1	0	1	0	0	0	0	0	0
	Green(62)	0	0	0	0	0	0	1	1	1	1	1	0	0	0	0	0	0	0
	Green(63)	0	0	0	0	0	0	1	1	1	1	1	1	0	0	0	0	0	0
Gray Scale Of Blue	Blue(0) / Dark	0	0	0	0	0	0	0	0	0	0	0	0	0	0	0	0	0	0
	Blue(1)	0	0	0	0	0	0	0	0	0	0	0	0	0	0	0	0	1	0
	Blue(2)	0	0	0	0	0	0	0	0	0	0	0	0	0	0	0	0	0	1
	:	:	:	:	:	:	:	:	:	:	:	:	:	:	:	:	:	:	:
	:	:	:	:	:	:	:	:	:	:	:	:	:	:	:	:	:	:	:
	Blue(61)	0	0	0	0	0	0	0	0	0	0	0	0	1	1	1	1	0	1
	Blue(62)	0	0	0	0	0	0	0	0	0	0	0	0	1	1	1	1	1	0
	Blue(63)	0	0	0	0	0	0	0	0	0	0	0	0	1	1	1	1	1	1

The copyright belongs to CHIMEI InnoLux. Any unauthorized use is prohibited.

The brightness of each primary color (red, green and blue) is based on the 8-bit gray scale data input for the color. The higher the binary input, the brighter the color. The table below provides the assignment of color versus data input.

(0: Low Level Voltage, 1: High Level Voltage)

Color		Data Signal																								
		Red								Green								Blue								
		R7	R6	R5	R4	R3	R2	R1	R0	G7	G6	G5	G4	G3	G2	G1	G0	B7	B6	B5	B4	B3	B2	B1	B0
Basic Colors	Black	0	0	0	0	0	0	0	0	0	0	0	0	0	0	0	0	0	0	0	0	0	0	0	0
	Red	1	0	0	0	0	0	0	0	0	0	0	0	0	0	0	0	0	0	0	0	0	0	0	0
	Green	0	0	0	0	0	0	0	0	1	1	1	1	1	1	1	1	0	0	0	0	0	0	0	0
	Blue	0	0	0	0	0	0	0	0	0	0	0	0	0	0	0	0	1	1	1	1	1	1	1	1
	Cyan	0	0	0	0	0	0	0	0	1	1	1	1	1	1	1	1	1	1	1	1	1	1	1	1
	Magenta	1	1	1	1	1	1	1	1	0	0	0	0	0	0	0	0	1	1	1	1	1	1	1	1
	Yellow	1	1	1	1	1	1	1	1	1	1	1	1	1	1	1	1	0	0	0	0	0	0	0	0
	White	1	1	1	1	1	1	1	1	1	1	1	1	1	1	1	1	1	1	1	1	1	1	1	1
Gray Scale Of Red	Red(0) / Dark	0	0	0	0	0	0	0	0	0	0	0	0	0	0	0	0	0	0	0	0	0	0	0	0
	Red(1)	0	0	0	0	0	0	0	1	0	0	0	0	0	0	0	0	0	0	0	0	0	0	0	0
	Red(2)	0	0	0	0	0	0	1	0	0	0	0	0	0	0	0	0	0	0	0	0	0	0	0	0
	:	:	:	:	:	:	:	:	:	:	:	:	:	:	:	:	:	:	:	:	:	:	:	:	:
	:	:	:	:	:	:	:	:	:	:	:	:	:	:	:	:	:	:	:	:	:	:	:	:	:
	Red(253)	1	1	1	1	1	1	0	1	0	0	0	0	0	0	0	0	0	0	0	0	0	0	0	0
	Red(254)	1	1	1	1	1	1	1	0	0	0	0	0	0	0	0	0	0	0	0	0	0	0	0	0
	Red(255)	1	1	1	1	1	1	1	1	0	0	0	0	0	0	0	0	0	0	0	0	0	0	0	0
Gray Scale Of Green	Green(0)/ Dark	0	0	0	0	0	0	0	0	0	0	0	0	0	0	0	0	0	0	0	0	0	0	0	0
	Green(1)	0	0	0	0	0	0	0	0	0	0	0	0	0	0	1	0	0	0	0	0	0	0	0	0
	Green(2)	0	0	0	0	0	0	0	0	0	0	0	0	0	0	0	0	0	0	0	0	0	0	0	0
	:	:	:	:	:	:	:	:	:	:	:	:	:	:	:	:	:	:	:	:	:	:	:	:	:
	:	:	:	:	:	:	:	:	:	:	:	:	:	:	:	:	:	:	:	:	:	:	:	:	:
	Green(253)	0	0	0	0	0	0	0	0	1	1	1	1	1	1	0	1	0	0	0	0	0	0	0	0
	Green(254)	0	0	0	0	0	0	0	0	1	1	1	1	1	1	1	0	0	0	0	0	0	0	0	0
	Green(255)	0	0	0	0	0	0	0	0	1	1	1	1	1	1	1	1	0	0	0	0	0	0	0	0
Gray Scale Of Blue	Blue(0) / Dark	0	0	0	0	0	0	0	0	0	0	0	0	0	0	0	0	0	0	0	0	0	0	0	0
	Blue(1)	0	0	0	0	0	0	0	0	0	0	0	0	0	0	0	0	0	0	0	0	0	0	0	1
	Blue(2)	0	0	0	0	0	0	0	0	0	0	0	0	0	0	0	0	0	0	0	0	0	0	1	0
	:	:	:	:	:	:	:	:	:	:	:	:	:	:	:	:	:	:	:	:	:	:	:	:	:
	:	:	:	:	:	:	:	:	:	:	:	:	:	:	:	:	:	:	:	:	:	:	:	:	:
	Blue(253)	0	0	0	0	0	0	0	0	0	0	0	0	0	0	0	0	1	1	1	1	1	1	0	1
	Blue(254)	0	0	0	0	0	0	0	0	0	0	0	0	0	0	0	0	1	1	1	1	1	1	1	0
	Blue(255)	0	0	0	0	0	0	0	0	0	0	0	0	0	0	0	0	1	1	1	1	1	1	1	1

The copyright belongs to CHIMEI InnoLux. Any unauthorized use is prohibited.

6. INTERFACE TIMING

6.1 TIMING CHARACTERISTICS

The input signal timing specifications are shown as the following table and timing diagram

Parameter		Symbol	Value			Unit	Note
			Min.	Typ.	Max.		
Vertical Display	Period	Tv	490	500	550	T_h	Tv=Tvd+Tvb
	Active	Tvd	-	480	-	T_h	-
	Blanking	Tvb	10	20	70	T_h	-
Horizontal Display	Period	T_h	930	992	1090	Tclock	Th=Thd+Thb
	Active	T_{hd}	-	800	-	Tclock	-
	Blanking	T_{hb}	130	192	290	Tclock	-
Clock Frequency		$1/T_{clock}$	28	29.5	32	MHz	-

Note (1) Since this assembly is operated in DE only mode, Hsync and Vsync input signals should be set to low logic level. Otherwise, this assembly would operate abnormally.

(2) Frame rate is 60Hz

INPUT SIGNAL TIMING DIAGRAM

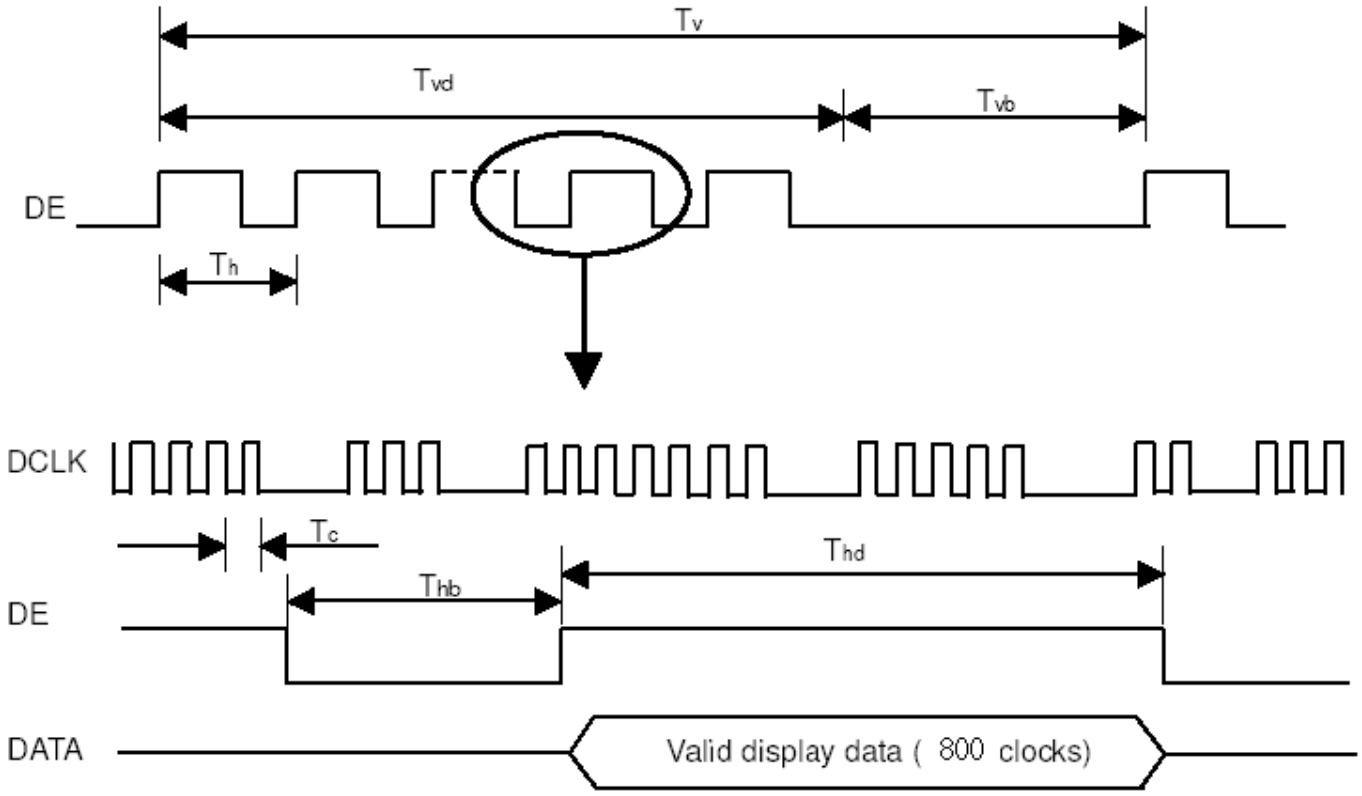

The copyright belongs to CHIMEI InnoLux. Any unauthorized use is prohibited.

6.2 LVDS INPUT DATA FORMAT

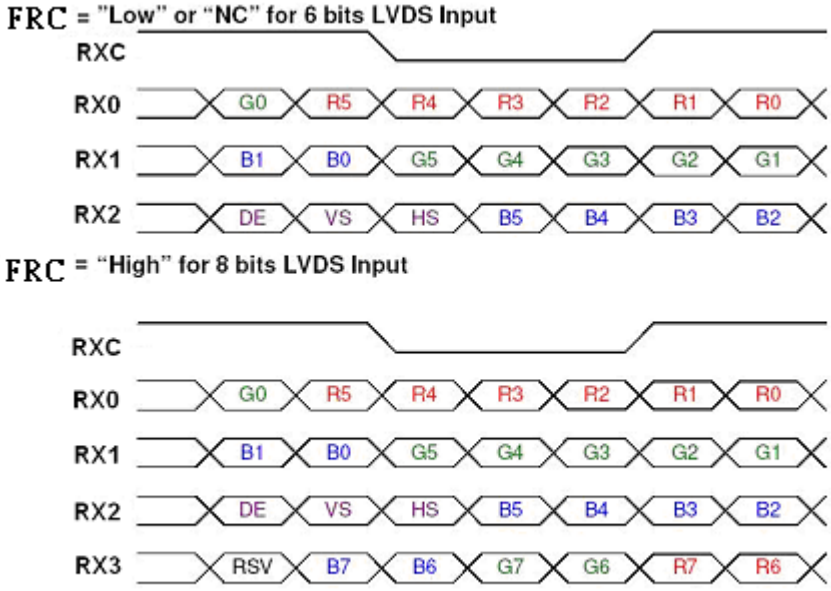

Note (1) R/G/B data 7: MSB, R/G/B data 0: LSB

Note (2) Please follow PSWG

Signal Name	Description	Remark
R7	Red Data 7 (MSB)	Red-pixel Data
R6	Red Data 6	Each red pixel's brightness data consists of these
R5	Red Data 5	8 bits pixel data.
R4	Red Data 4	
R3	Red Data 3	
R2	Red Data 2	
R1	Red Data 1	
R0	Red Data 0 (LSB)	
G7	Green Data 7 (MSB)	Green-pixel Data
G6	GreenData 6	Each green pixel's brightness data consists of these
G5	GreenData 5	8 bits pixel data.
G4	GreenData 4	
G3	GreenData 3	
G2	GreenData 2	
G1	GreenData 1	
G0	GreenData 0 (LSB)	
B7	Blue Data 7 (MSB)	Blue-pixel Data
B6	Blue Data 6	Each blue pixel's brightness data consists of these
B5	Blue Data 5	8 bits pixel data.
B4	Blue Data 4	
B3	Blue Data 3	
B2	Blue Data 2	
B1	Blue Data 1	
B0	Blue Data 0 (LSB)	
RXCLKIN+ RXCLKIN-	LVDS Clock Input	
DE	Display Enable	
VS	Vertical Sync	
HS	Horizontal Sync	

Note (3) Output signals from any system shall be low or Hi-Z state when VCC is off.

The copyright belongs to CHIMEI InnoLux. Any unauthorized use is prohibited.

6.3 POWER ON/OFF SEQUENCE

To prevent a latch-up or DC operation of LCD assembly, the power on/off sequence should be as the diagram below

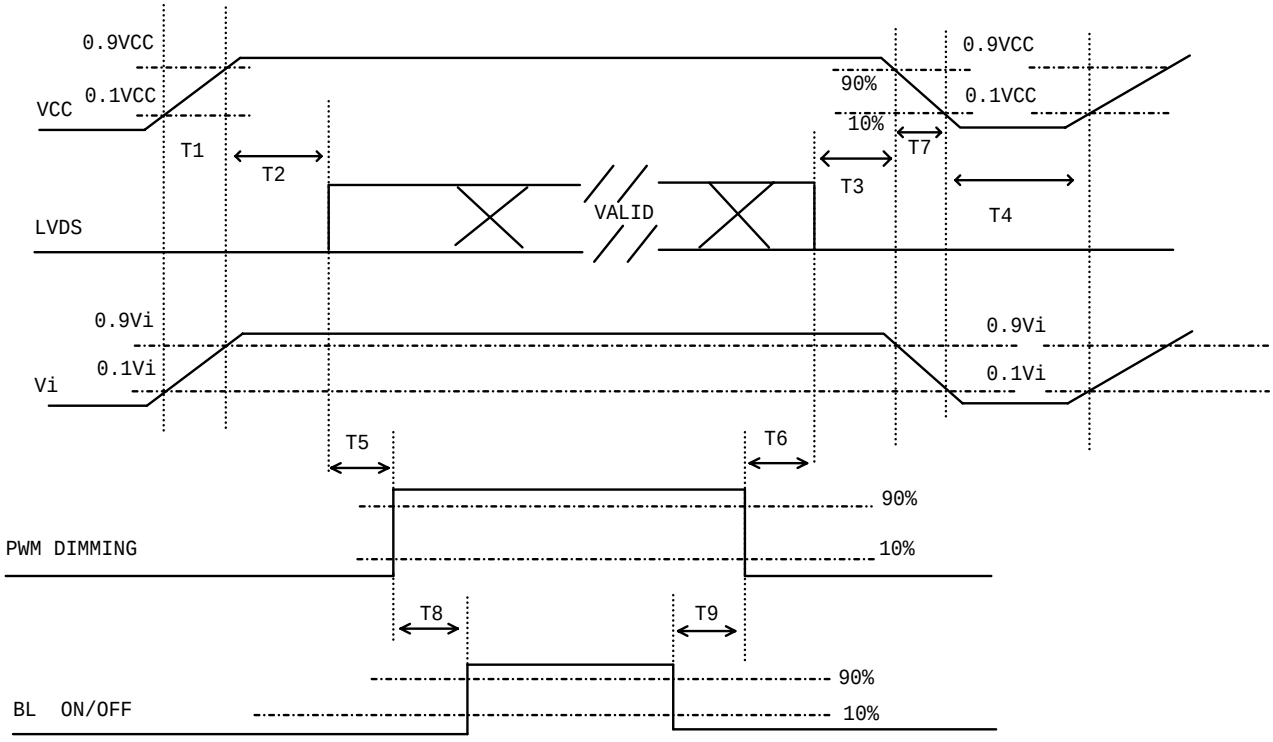

Power ON/OFF sequence

Note (1) Please avoid floating state of interface signal at invalid period.

Note (2) When the interface signal is invalid, be sure to pull down the power supply of LCD VCC to 0 V.

Note (3) The Backlight converter power must be turned on after the power supply for the logic and the interface signal is valid. The Backlight converter power must be turned off before the power supply for the logic and the interface signal is invalid.

Parameter	Value			Units
	Min	Typ	Max	
T1	0.5	-	10	ms
T2	0	-	50	ms
T3	0	-	50	ms
T4	500	-	-	ms
T5	20	-	-	ms
T6	10	-	-	ms
T7	5		300	ms
T8	10	-	-	ms
T9	10	-	-	ms

The copyright belongs to CHIMEI InnoLux. Any unauthorized use is prohibited.

7. OPTICAL CHARACTERISTICS

7.1 TEST CONDITIONS

Item	Symbol	Value	Unit
Ambient Temperature	Ta	25±2	°C
Ambient Humidity	Ha	50±10	%RH
Supply Voltage	V_{CC}	3.3	V
Input Signal	According to typical value in "3. ELECTRICAL CHARACTERISTICS"		
Current	I_f	55±3	mA
Converter Duty		100	%

Note (1) I_f means the forward current of each channel

7.2 OPTICAL SPECIFICATIONS

The relative measurement methods of optical characteristics are shown in 7.2. The following items should be measured under the test conditions described in 7.1 and stable environment shown in Note (6).

Item		Symbol	Condition	Min.	Typ.	Max.	Unit	Note
Color Chromaticity	Red	Rx	θ_x=0°, θ_Y =0° Viewing Normal Angle	Typ – 0.03	0.645	Typ + 0.03		(1), (6)
		Ry			0.341			
	Green	Gx			0.312			
		Gy			0.625			
	Blue	Bx			0.153			
		By			0.053			
	White	Wx			0.313			
		Wy			0.329			
Center Luminance of White		L_C		400	500		cd/m^2	(4), (6)
Contrast Ratio		CR		500	600		-	(2), (6)
Response Time		T_R			5	10	Ms	(3)
		T_F			11	16	Ms	
White Variation		δW			1.25	1.4	-	(5), (6)
Viewing Angle	Horizontal	θ_x+	CR ≧ 10	60	70		Deg.	(1), (6)
		θ_x-		60	70			
	Vertical	θ_Y+		50	60			
		θ_Y-		50	60			

The copyright belongs to CHIMEI InnoLux. Any unauthorized use is prohibited.

Note (1) Definition of Viewing Angle (θx, θy):

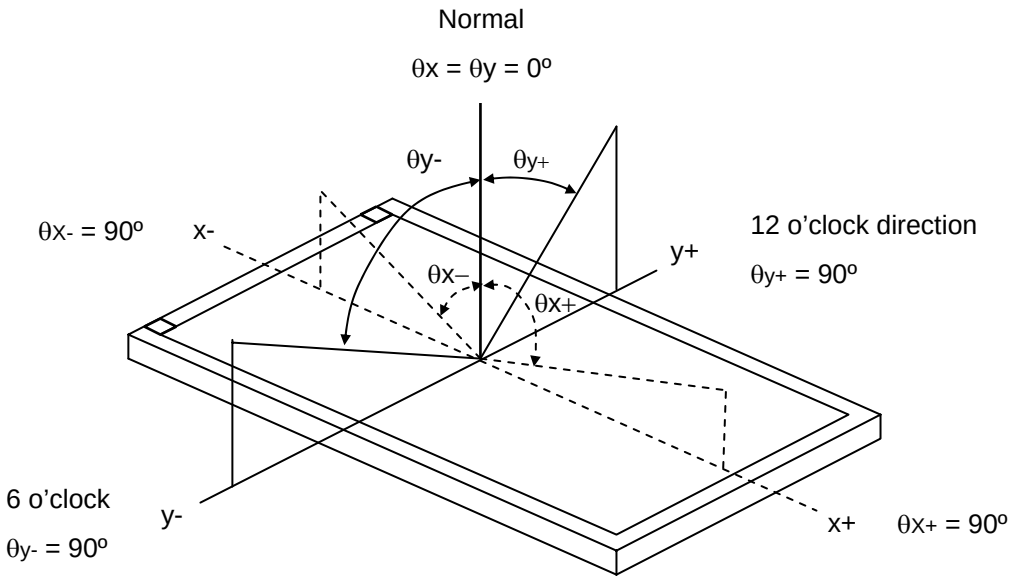

Note (2) Definition of Contrast Ratio (CR):

The contrast ratio can be calculated by the following expression.

Contrast Ratio (CR) = L63 / L0

L63: Luminance of gray level 63

L 0: Luminance of gray level 0

CR = CR (5)

CR (X) is corresponding to the Contrast Ratio of the point X at Figure in Note (5).

Note (3) Definition of Response Time (T_R, T_F) and measurement method:

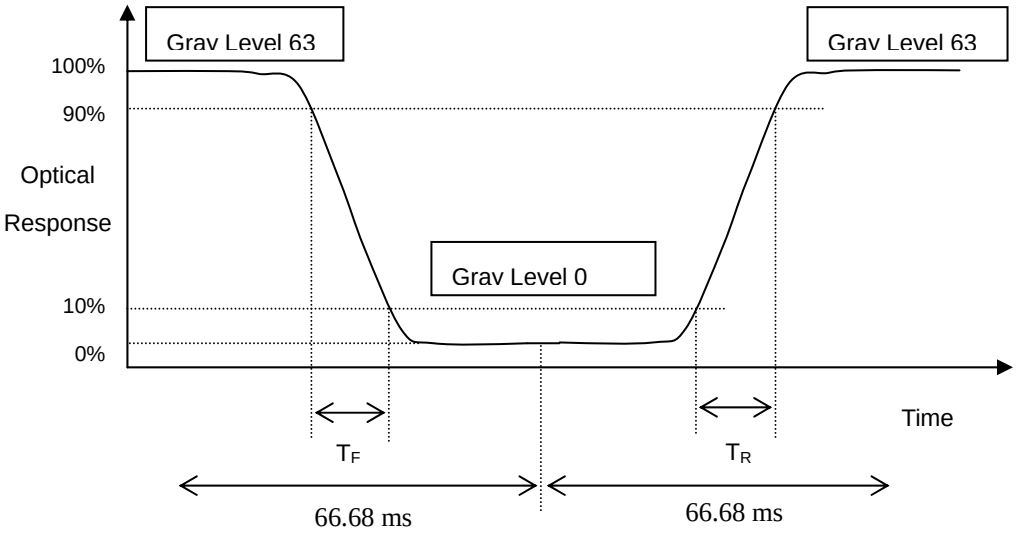

The copyright belongs to CHIMEI InnoLux. Any unauthorized use is prohibited.

Note (4) Definition of Luminance of White (L_C):

Measure the luminance of gray level 63 at center point

L_C = L (5)

L (x) is corresponding to the luminance of the point X at Figure in Note (5).

Note (5) Definition of White Variation (δW):

Measure the luminance of gray level 63 at 5 points

δW = Maximum [L (1), L (2), L (3), L (4), L (5)] / Minimum [L (1), L (2), L (3), L (4), L (5)]

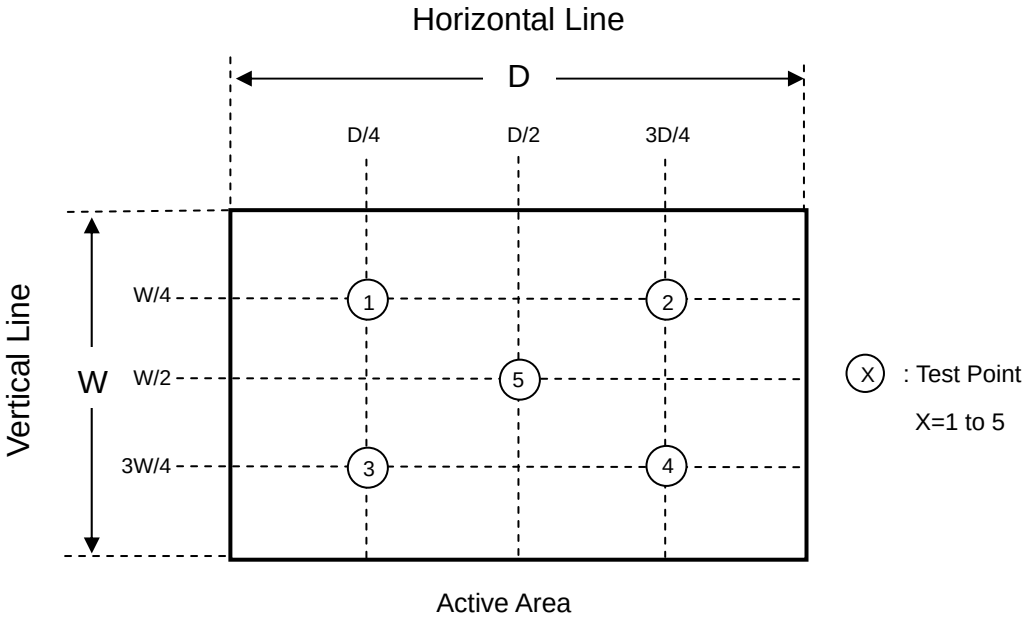

Note (6) Measurement Setup:

The LCD module should be stabilized at given temperature for 20 minutes to avoid abrupt temperature change during measuring. In order to stabilize the luminance, the measurement should be executed after lighting Backlight for 20 minutes in a windless room.

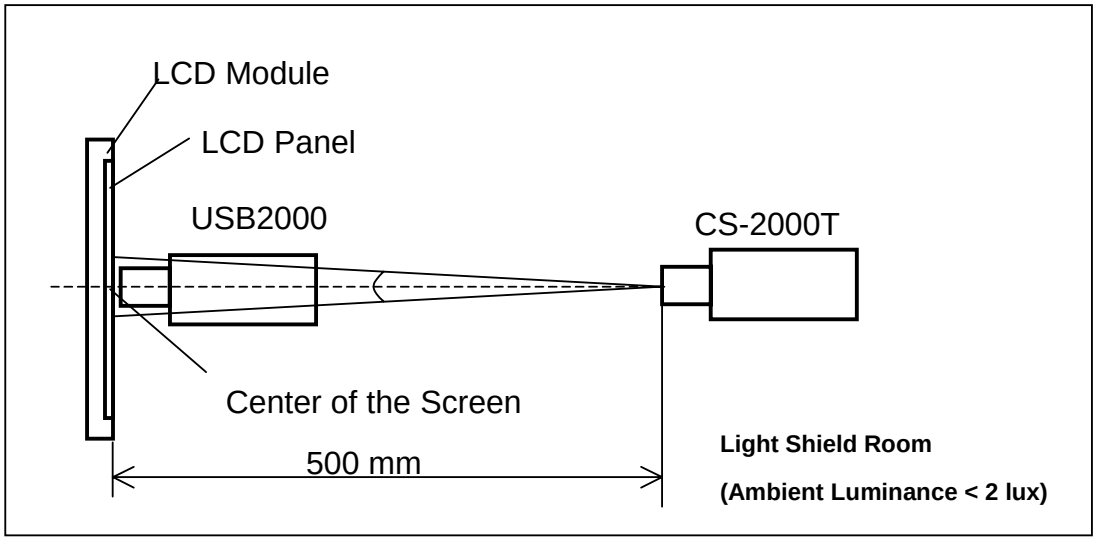

The copyright belongs to CHIMEI InnoLux. Any unauthorized use is prohibited.

8. RELIABILITY TEST

8.1 RELIABILITY TEST CONDITION

No.	Test Item	Test Condition	Note
1	High Temperature Storage	95℃, 240 hours	(1) (2)
2	Low Temperature Storage	-40℃, 240 hours	
3	Thermal Shock Storage	{(-40℃, 0.5 hour) (85℃, 0.5 hour)}, 100 cycles	
4	High Temperature Operating	85℃, 240 hours	
5	Low Temperature Operating	-30℃, 240 hours	
6	High Temperature & High Humidity Operating	60℃, 90% RH, 240hours	
7	Shock (Non-Operating)	100G, 6ms, half sine wave, 3 times for ± X, ± Y, ± Z.	(3)
8	Vibration (Non-Operating)	3G, 10 ~ 200 Hz, 10min/cycle, 3 cycles each X, Y, Z	(3)

Note (1) There should be no condensation on the surface of panel during test.

Note (2) The temperature of panel display surface area should be 95℃ Max.

Note (3) At testing Vibration and Shock, the fixture in holding the module has to be hard and rigid enough so that the module would not be twisted or bent by the fixture.

Note (4) In the standard conditions, there is no function failure issue occurred. All the cosmetic specification is judged before the reliability test.

The copyright belongs to CHIMEI InnoLux. Any unauthorized use is prohibited.

9. PACKAGING

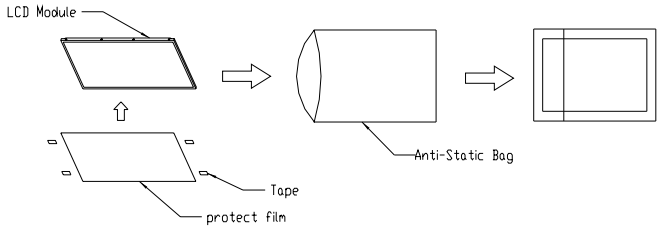

(1) 34pcs Modules/1 box
(2) Carton dimensions : 465(L)x362(W)x314(H)mm

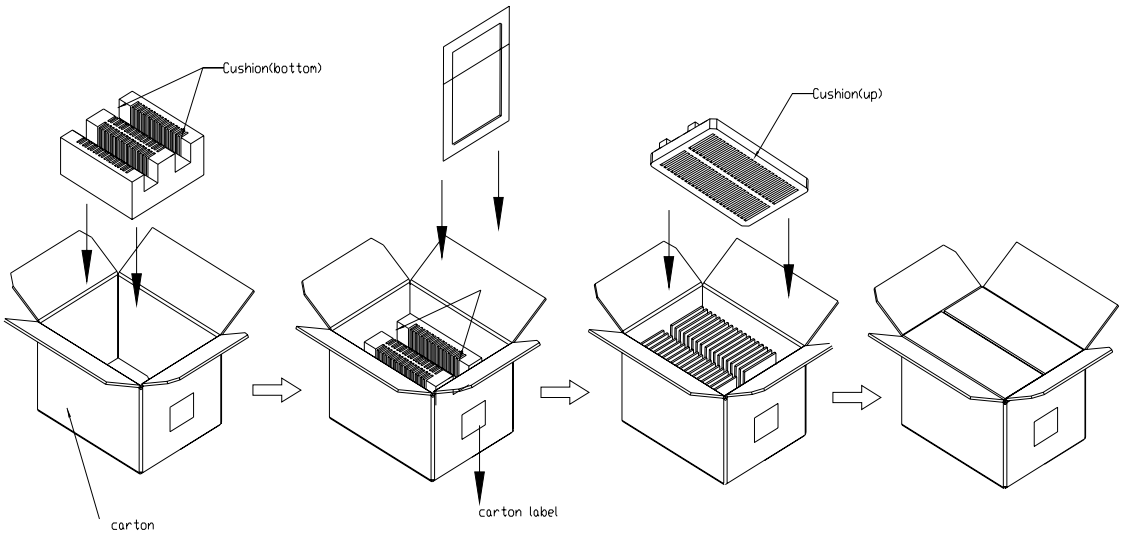

The copyright belongs to CHIMEI InnoLux. Any unauthorized use is prohibited.

Sea / Land Transportation (40ft Container)

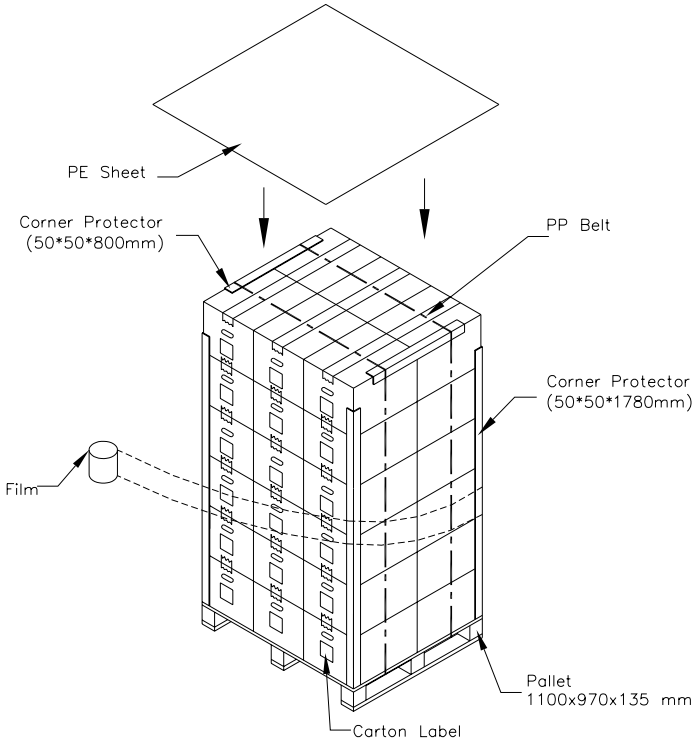

Air Transportation

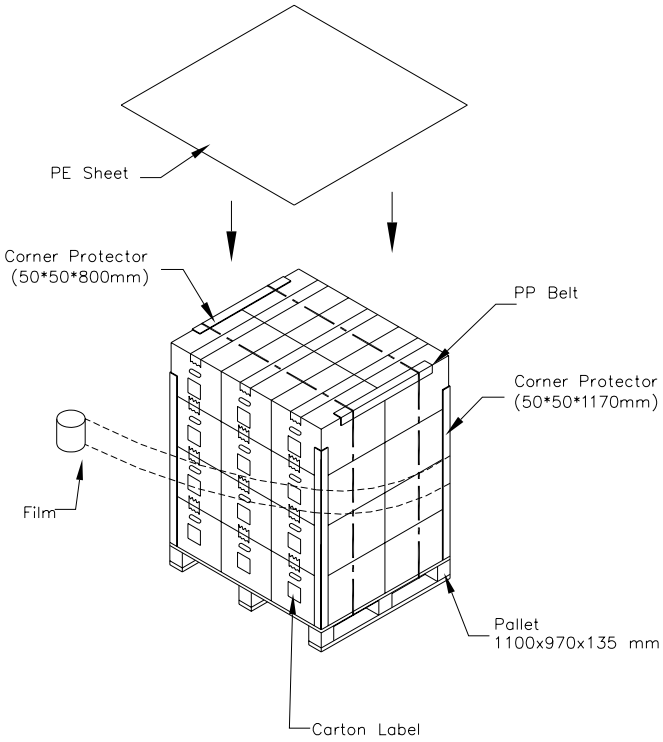

The copyright belongs to CHIMEI InnoLux. Any unauthorized use is prohibited.

10. DEFINITION OF LABELS

10.1 CMO MODULE LABEL

The barcode nameplate is pasted on each module as illustration, and its definitions are as following explanation.

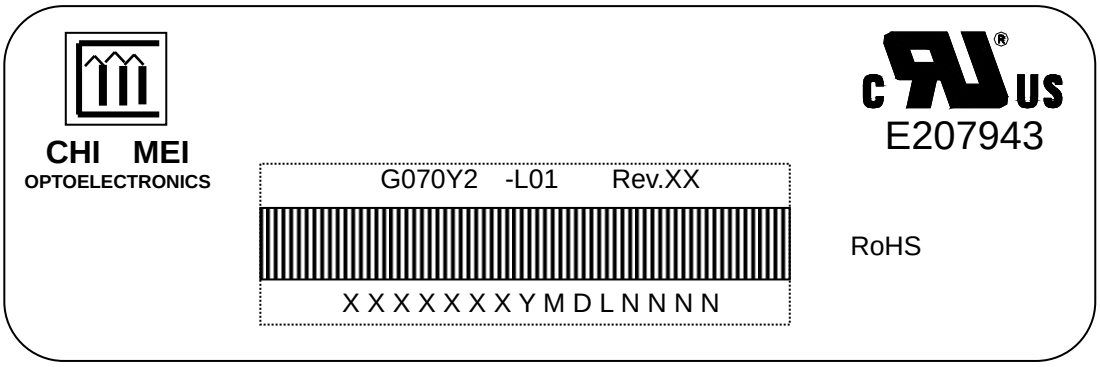

(a) Model Name: G070Y2 -L01

(b) Revision: Rev. XX, for example: A1, …, C1, C2 …etc.

(c) Serial ID: X X X X X X X Y M D X N N N N

- Serial No.
- CMO Internal Use
- Year, Month, Date
- CMO Internal Use
- Revision
- CMO Internal Use

Serial ID includes the information as below:

(a) Manufactured Date: Year: 1~9, for 2001~2009

Month: 1~9, A~C, for Jan. ~ Dec.

Day: 1~9, A~Y, for 1st to 31st, exclude I , O and U

(b) Revision Code: cover all the change

Serial No.: Manufacturing sequence of product

The copyright belongs to CHIMEI InnoLux. Any unauthorized use is prohibited.

11. PRECAUTIONS

11.1 ASSEMBLY AND HANDLING PRECAUTIONS

(1) Do not apply rough force such as bending or twisting to the module during assembly.

(2) To assemble or install module into user's system can be only in clean working areas. The dust and oil may cause electrical short or worsen the polarizer.

(3) It's not permitted to have pressure or impulse on the module because the LCD panel and Backlight will be damaged.

(4) Always follow the correct power sequence when LCD module is connecting and operating. This can prevent damage to the CMOS LSI chips during latch-up.

(5) Do not pull the I/F connector in or out while the module is operating.

(6) Do not disassemble the module.

(7) Use a soft dry cloth without chemicals for cleaning, because the surface of polarizer is very soft and easily scratched.

(8) It is dangerous that moisture come into or contacted the LCD module, because moisture may damage LCD module when it is operating.

(9) High temperature or humidity may reduce the performance of module. Please store LCD module within the specified storage conditions.

(10) When ambient temperature is lower than 10ºC may reduce the display quality. For example, the response time will become slowly, and the starting voltage of CCFL will be higher than room temperature.

(11) Do not keep same pattern in a long period of time. It may cause image sticking on LCD

11.2 SAFETY PRECAUTIONS

(1) Do not disassemble the module or insert anything into the Backlight unit to prevent electrical shock.

(2) If the liquid crystal material leaks from the panel, it should be kept away from the eyes or mouth. In case of contact with hands, skin or clothes, it has to be washed away thoroughly with soap.

(3) After the module's end of life, it is not harmful in case of normal operation and storage.

The copyright belongs to CHIMEI InnoLux. Any unauthorized use is prohibited.

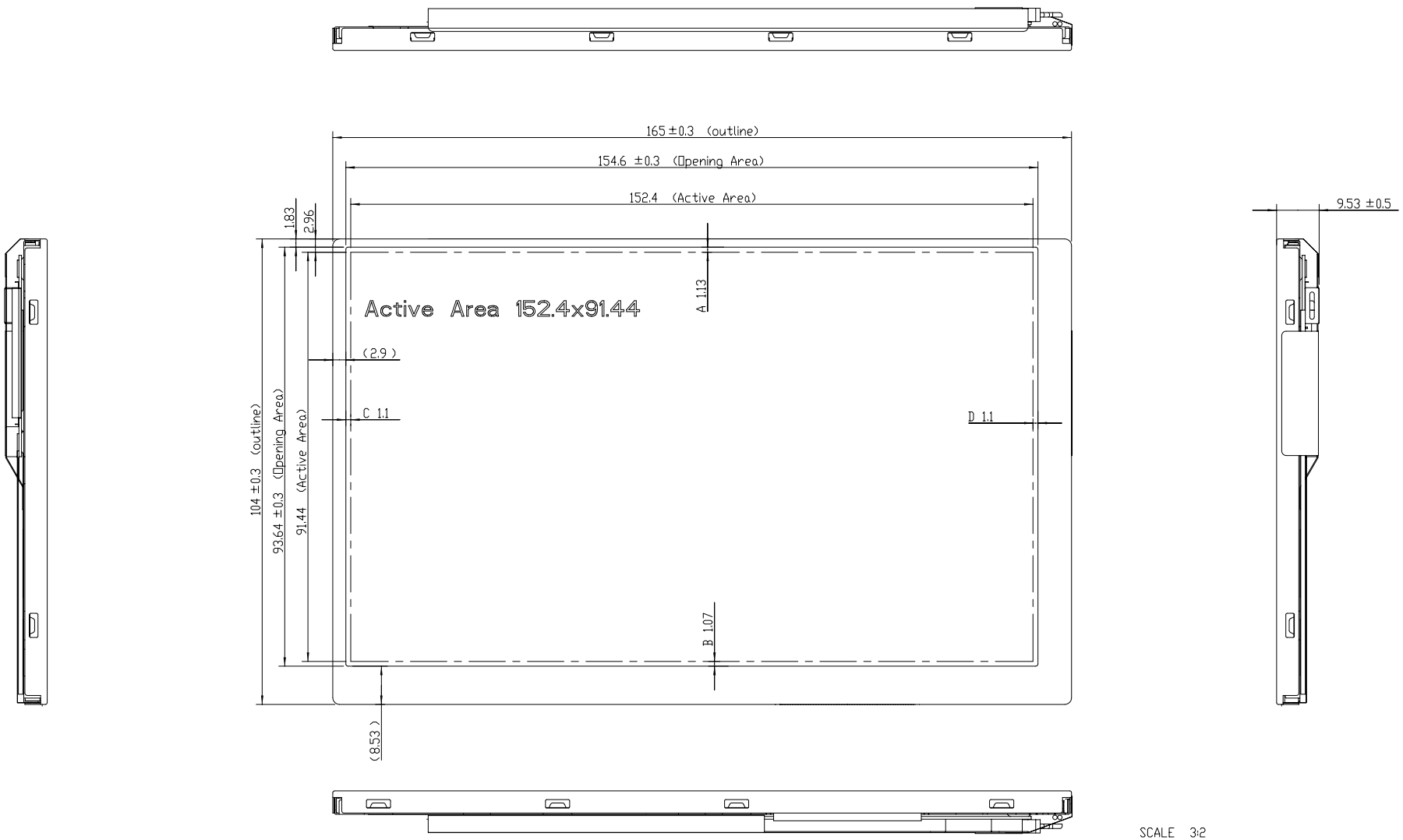

SCALE 3:2

Note:
1.UNSPECIFIED TOLERANCE=±0.3mm.
2.DISPLAY AREA POSITION TOLERANCE: IA-BI<=1mm & IC-DI<=1mm.
3.LVDS CONNECTOR: 73B20-0048RA-G4 (Starcon).
4.P/I CONNECTOR: LM123S004HTF13 (Unicorn).
5.THOSE SCREWS AT PCBA BOARD TO TWIST WITH FORCE IS 0.6 Kgf-cm
AND REPEAT TIMES<= 4 .
6.THE WIRE IS UNDER THE PCB PROTECTOR FILM.

Mark	Description	Date	Changed_By	Approved_By	ECN No.	Remark

TITLE	ASSY_MODULE_G070Y2-L01				2D REV.	A
					3D REV.	1.23+
Approved	KL_Lin	Drawing No.	G07024101A			
Checked	TIGER	Part No.	TBD			
Drawer	MIROR_CHEN	Material	TBD	Sheet	1 / 2	A2
Designer	MIROR_CHEN	Date	15-Oct-2009	Scale	1:1	Unit:mm

CHI MEI OPTOELECTRONICS CORP.

ALL RIGHTS RESERVED, COPYING FORBIDDEN.

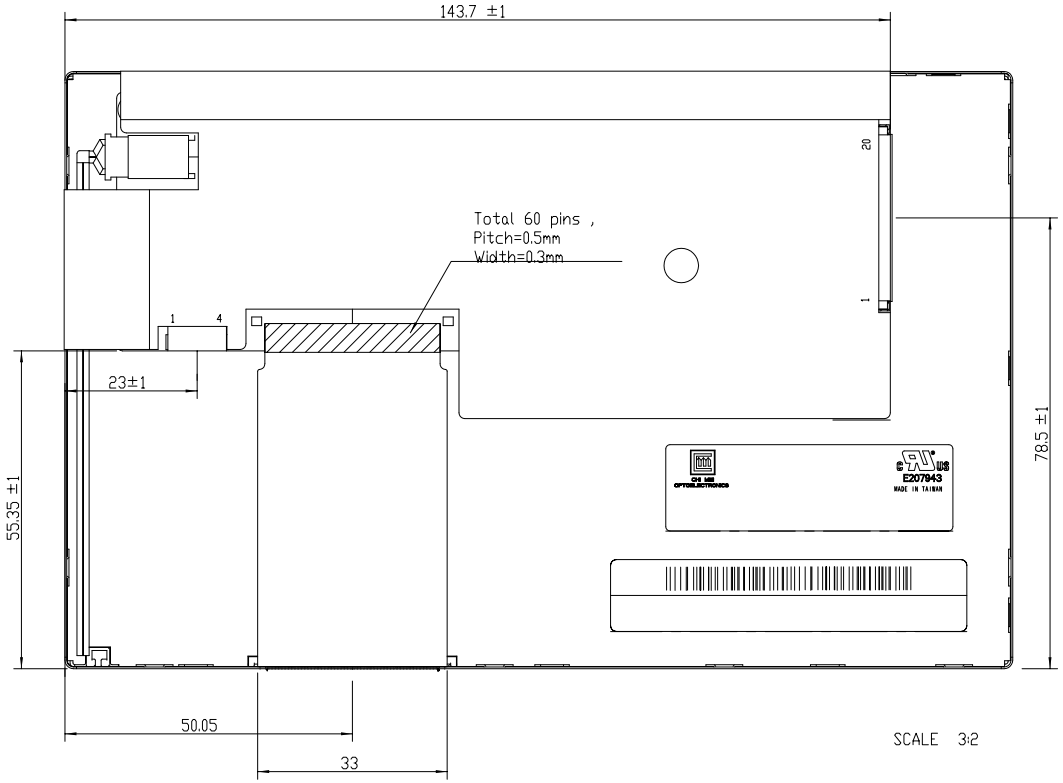

Note:
1.UNSPECIFIED TOLERANCE=±0.3mm.
2.DISPLAY AREA POSITION TOLERANCE: IA-BI<=1mm & IC-DI<=1mm.
3.LVDS CONNECTOR: 73B20-0048RA-G4 (Starcon).
4.P/I CONNECTOR: LM123S004HTF13 (Unicorn).
5.THOSE SCREWS AT PCBA BOARD TO TWIST WITH FORCE IS 0.6 Kgf-cm AND REPEAT TIMES<= 4 .
6.THE WIRE IS UNDER THE PCB PROTECTOR FILM.

Mark	Description	Date	Changed_By	Approved_By	ECN No.	Remark

TITLE	ASSY_MODULE_G070Y2-L01					2D REV.	A
						3D REV.	1.23+
Approved	KL_Lin	Drawing No.	G07024101A				
Checked	TIGER	Part No.	TBD				
Drawer	MIROR_CHEN	Material	TBD			Sheet	2 / 2 A2
Designer	MIROR_CHEN	Date	15-Oct-2009	Scale	1:1	Unit:mm	

CHI MEI OPTOELECTRONICS CORP.

ALL RIGHTS RESERVED, COPYING FORBIDDEN.

Our company network supports you worldwide with offices in Germany, Great Britain, Italy, Turkey and the USA. For more information please contact:

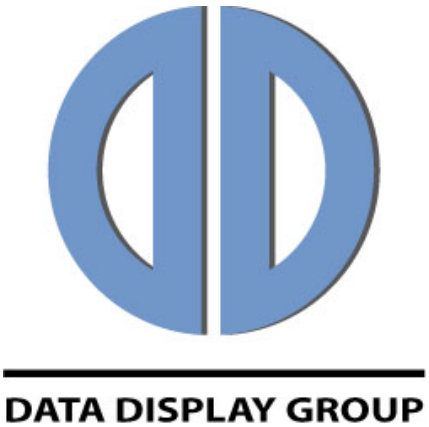

Distec GmbH
Augsburger Str. 2b
82110 Germering
Germany
Phone: +49 (0)89 / 89 43 63-0
Fax: +49 (0)89 / 89 43 63-131
E-Mail: info@datadisplay-group.de
Internet: www.datadisplay-group.de

Display Technology Ltd.
5 The Oaks Business Village
Revenge Road, Lordswood
Chatham, Kent, ME5 8LF
United Kingdom
Phone: +44 (0)1634 / 67 27 55
Fax: +44 (0)1634 / 67 27 54
E-Mail: info@datadisplay-group.co.uk
Internet: www.datadisplay-group.co.uk

Data Display S.r.l.
Via Marco Polo, 9/D
I-35010 Trebaseleghe (PD)
Italy
Phone: +39 049 / 72 40 038
Fax: +39 049 / 72 40 039
E-Mail: info@datadisplay-group.it
Internet: www.datadisplay-group.it

Data Display Teknoloji Elektronik San Ve Diş Tic A.Ş.
Kustepe Leylak Sok.
Nursanlar Is Merkezi
Kat. 6 No: 21
Sisli / Istanbul
Turkey
Phone: +90 (0)212 / 356 04 20
Fax: +90 (0)212 / 356 04 25
E-Mail: info@datadisplay-group.com.tr
Internet: www.datadisplay-group.com.tr

Apollo Display Technologies, Corp.
87 Raynor Avenue, Unit 1
Ronkonkoma, NY 11779
United States of America
Phone: +1 631 / 580-43 60
Fax: +1 631 / 580-43 70
E-Mail: info@datadisplay-group.com
Internet: www.datadisplay-group.com