FORYARD
OPTOELECTRONICS

SMD

FYLS - 1210HR/YGC

Features:

- Compatible with automatic placement equipment
- Compatible with reflow solder process.

Applications:

- Automotive-Telecommumication
- Indicators
- Lcd Back-lights
- Illuminations

Descriptions:

- Dice material: R：AlGaAs.
  G：AlGaAs.
- Emitting Color: R：Red.
  G：Green
- Lens Color: Water clear.

Radiation pattern.

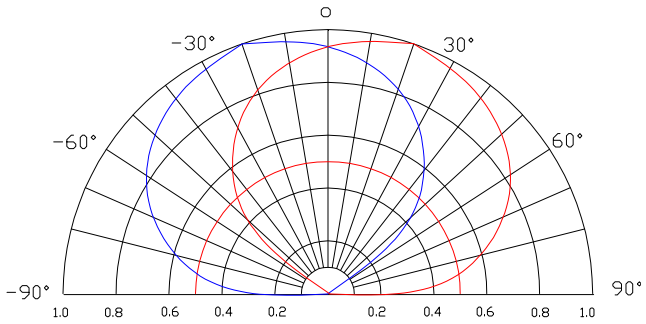

Relative Lumionous Intensity(LOP @max=1)

Absolute maximun ratings(Ta=25 ˚c)

Parameter	MAX.	Unit
Power Dissipation	50	mW
Peak Forward Current (1/10 Duty Cycle, 0.1ms Pulse Width)	100	mA
Continuous Forward Current	30	mA
Derating Linear From 25℃	0.4	mA/℃
Operating Temperature Range	-30℃ to +80℃	
Storage Temperature Range	-40℃ to +85℃	

Electrical and optical characteristics(Ta=25 ˚c)

Parameter	Symbol		Min.	Typ.	Max.	Unit	Test Condition
Luminous Intensity	IV	R	–	28	–	mcd	IF=20mA
		G	–	15	–		
Viewing Angle	2θ1/2		120	130	140	Deg	
Peak Emission Wavelength	λp	R	655	660	665	nm	
		G	565	570	575		
Dominant Wavelength	λd	R	635	640	645	nm	
		G	566	571	576		
Spectral Line Half-Width	△λ		25	30	35	nm	
Forward Voltage	VF	R	–	2.1	2.4	V	
		G	–	2.2	2.4		
Reverse Current	IR				10	μA	VR=5V

FORYARD
OPTOELECTRONICS

SMD

Typical Electrical Characteristics Curves
(25 °c Ambient Temperature Unless Otherwise Noted)

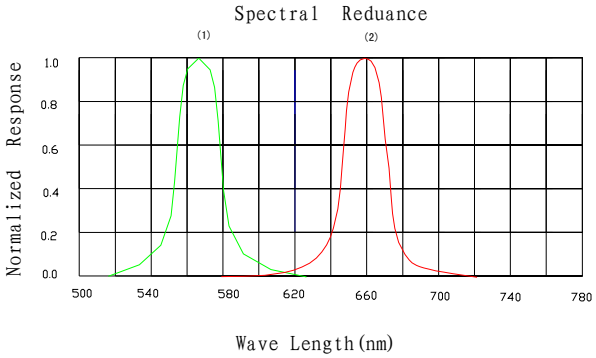

(1) peak@568nm /yellow Green
(2) peak@660nm / Orange

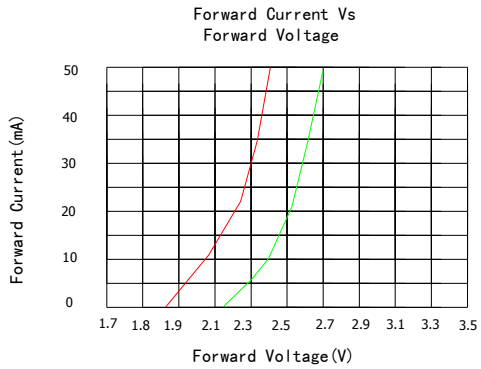

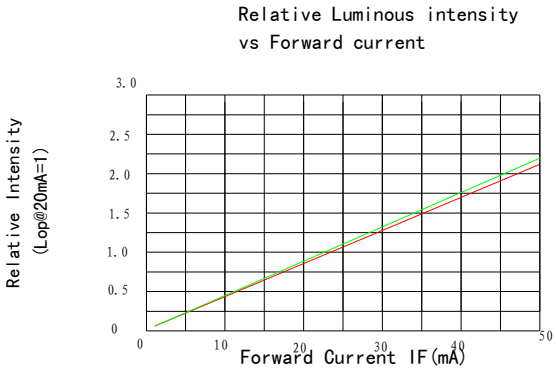

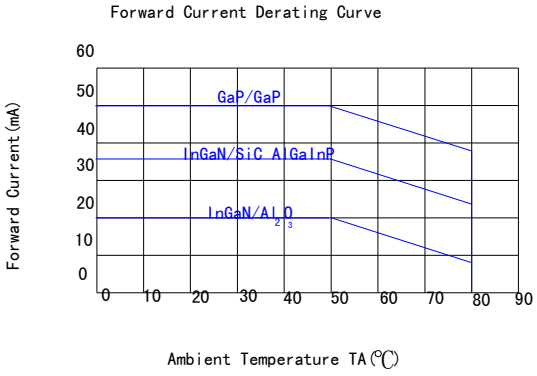

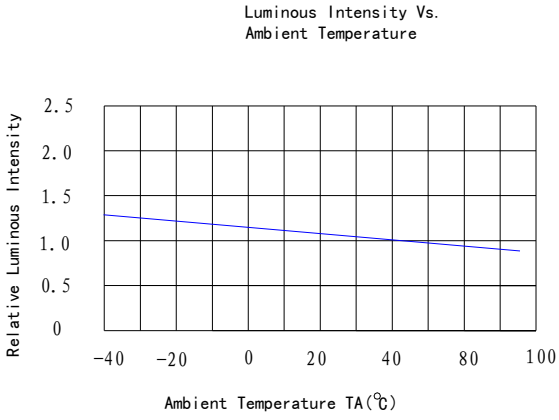

◆ Precautions For Use

- **Over-current-proof**

  Customer must apply resistors for protection,otherwise slight voltage shift will cause big current chang(Burn out will happen)

- **Storage**

1. The operation of temperature and R.H are:5 ˚c —30 ˚c,R.H.60% Max.
2. Once the package is opened ,the products should be used within a week. Otherwise,they Should be kept in a dampproof box with desccating regent.Considering the tape life,we Suggest our customers to use our products within 1.5year (form production date).
3. It's recommended to bake before soldering when the package is unsealed after 72hrs.The Condition is: 60 ˚c ±5 ˚c for 15 hrs.

◆ Soldering Iron:

- Temperature at tip of iron:300 ˚c Max.(25W Max)
- Soldering time:3±1sec.

◆ Reflow Temp./Time:

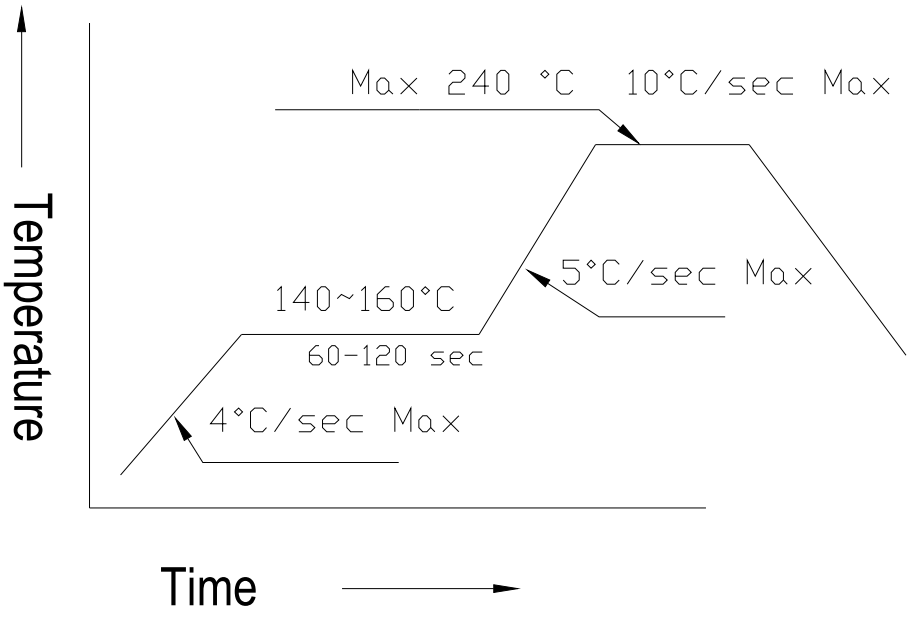

FORYARD OPTOELECTRONICS

SMD

◆ Package Dimensions of Device

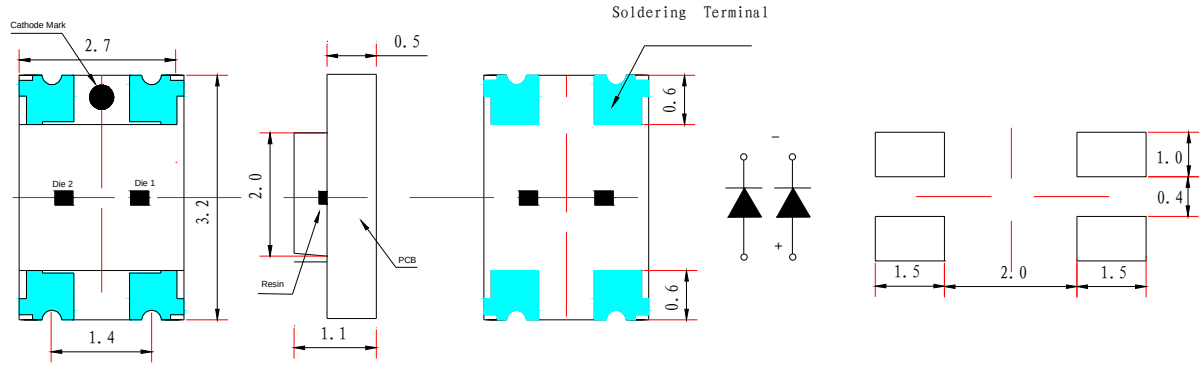

Unit:mm

◆ Tape Specification: 3000pcs Per Reel.

Packing Size								
Item	W	P1	E	F	D0	D1	P0	Unit
Spec.	8.00	4.00	1.75	3.50	1.50	1.00	4.00	mm
Tolerance	±0.20	±0.10	±0.10	±0.05	+0.1/-0	±0.05	±0.05	mm
Item	10P0	P2	A0	B0	K0	T		Unit
Spec.	40.00	2.00	2.80	3.35	1.35	0.22		mm
Tolerance	±0.20	±0.05	±0.10	±0.10	±0.10	±0.05		mm

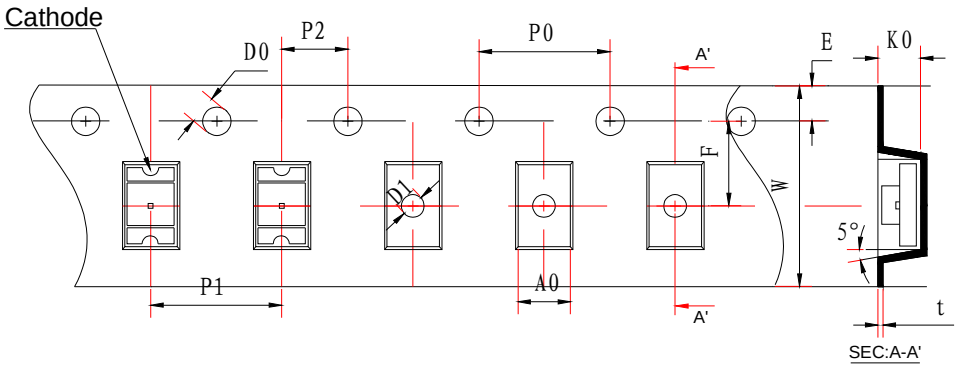

◆ Package Dimensions of Reel:

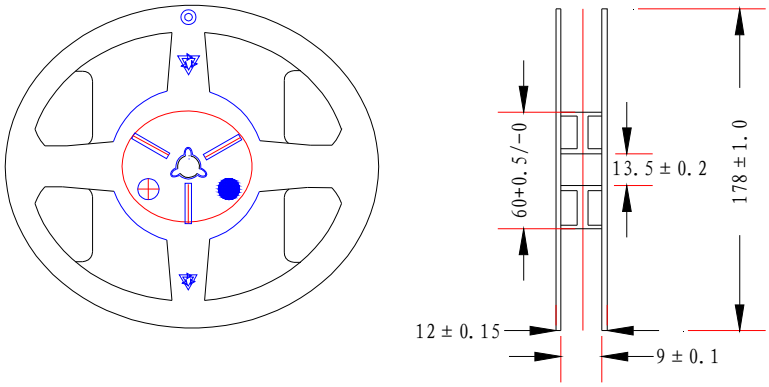

Unit:mm

FORYARD
OPTOELECTRONICS

SMD

◆ Packing and Shipping Spec.

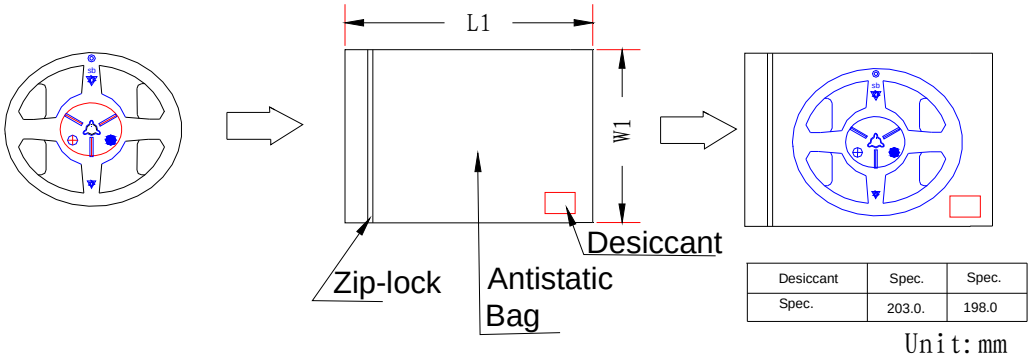

Desiccant	Spec.	Spec.
Spec.	203.0.	198.0

Unit: mm

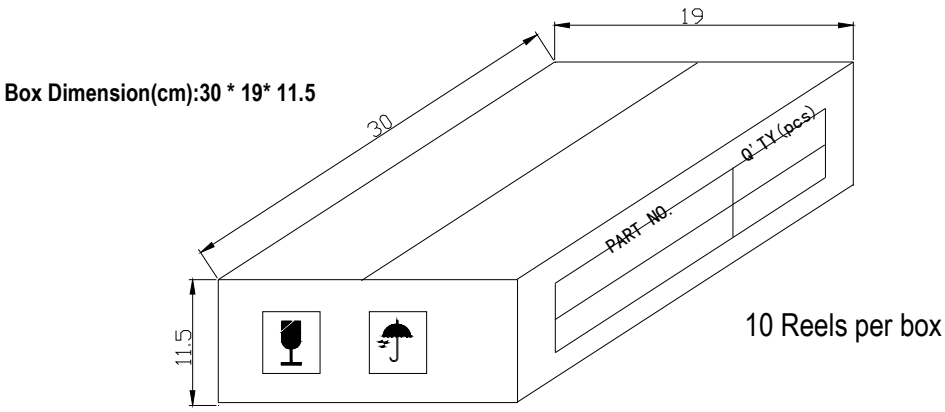

Box Dimension(cm):30 * 19* 11.5

10 Reels per box

CARTON
Dimension(cm):39*32*38

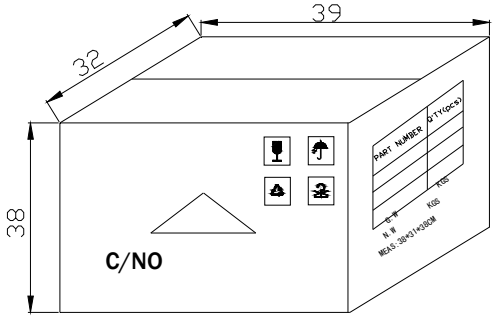

6boxs/carton
0603B/0603/0805:
4000pcs*10Reels*6boxs

0805B/1206B/1206/1210/1204:
3000pcs*10Reels*6boxs*

3528:2000pcs*10Reels*6boxs
5050:1000pcs*8Reels*6boxs