FAIRCHILD SEMICONDUCTOR™

April 2004
Revised June 2004

FXL4245

Low Voltage Dual Supply 8-Bit Signal Translator with Configurable Voltage Supplies and Signal Levels and 3-STATE Outputs

General Description

The FXL4245 is a configurable dual-voltage-supply translator designed for bi-directional voltage translation of signals between two voltage levels. The device allows translation between voltages as high as 3.6V to as low as 1.1V. The A Port tracks the V_{CCA} level, and the B Port tracks the V_{CCB} level. Both ports are designed to accept supply voltage levels from 1.1V to 3.6V. This allows for bi-directional voltage translation over a variety of voltage levels: 1.2V, 1.5V, 1.8V, 2.5V, and 3.3V.

The device remains in 3-STATE until both V_{CC}s reach active levels allowing either V_{CC} to be powered-up first. The device also contains power down control circuits that place the device in 3-STATE if either V_{CC} is removed.

The Transmit/Receive ($T/\overline{R}$) input determines the direction of data flow through the device. The $\overline{OE}$ input, when HIGH, disables both the A and B Ports by placing them in a 3-STATE condition. The FXL4245 is designed so that the control pins ($T/\overline{R}$ and $\overline{OE}$) are supplied by V_{CCA}.

Features

- Bi-directional interface between any 2 levels from 1.1V to 3.6V
- Fully configurable, inputs track V_{CC} level
- Non-preferential power-up sequencing; either V_{CC} may be powered-up first
- Outputs remain in 3-STATE until active V_{CC} level is reached
- Outputs switch to 3-STATE if either V_{CC} is at GND
- Power-off protection
- Control inputs ($T/\overline{R}$, $\overline{OE}$) levels are referenced to V_{CCA} voltage
- Packaged in 24-terminal MLP
- ESD protection exceeds:
  - 4kV HBM ESD (per JESD22-A114 & Mil Std 883e 3015.7)
  - 8kV HBM I/O to GND ESD (per JESD22-A114 & Mil Std 883e 3015.7)
  - 1kV CDM ESD (per ESD STM 5.3)
  - 200V MM ESD (per JESD22-A115 & ESD STM5.2)

Ordering Code:

Order Number	Package Number	Package Description
FXL4245MPX	MLP024B	24-Terminal Molded Leadless Package (MLP), JEDEC MO-220, 3.5mm x 4.5mm

© 2004 Fairchild Semiconductor Corporation

Terminal Descriptions

Terminal Names	Description
$\overline{OE}$	Output Enable Input
T/$\overline{R}$	Transmit/Receive Input
A_0–A_7	Side A Inputs or 3-STATE Outputs
B_0–B_7	Side B Inputs or 3-STATE Outputs
V_{CCA}	Side A Power Supply
V_{CCB}	Side B Power Supply
GND	Ground

Truth Table

Inputs		Outputs
$\overline{OE}$	T/$\overline{R}$	
L	L	Bus B Data to Bus A
L	H	Bus A Data to Bus B
H	X	3-STATE

H = HIGH Voltage Level L = LOW Voltage Level X = Don't Care

Connection Diagram

Terminal Assignments for MLP

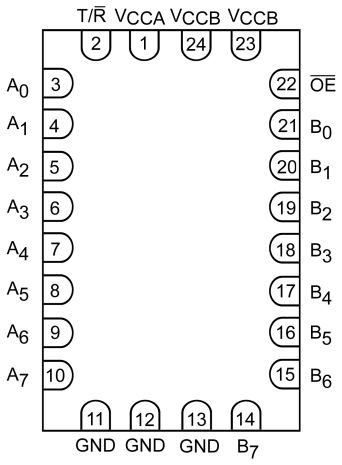

(Top View)

Terminal Assignment

Terminal Number	Terminal Name
1	V_{CCA}
2	T/$\overline{R}$
3	A_0
4	A_1
5	A_2
6	A_3
7	A_4
8	A_5
9	A_6
10	A_7
11	GND
12	GND

Terminal Number	Terminal Name
13	GND
14	B_7
15	B_6
16	B_5
17	B_4
18	B_3
19	B_2
20	B_1
21	B_0
22	$\overline{OE}$
23	V_{CCB}
24	V_{CCB}

Power-Up/Power-Down Sequencing

FXL translators offer an advantage in that either V_{CC} may be powered up first. This benefit derives from the chip design. When either V_{CC} is at 0 volts, outputs are in a HIGH-Impedance state. The control inputs (T/$\overline{R}$ and $\overline{OE}$) are designed to track the V_{CCA} supply. A pull-up resistor tying $\overline{OE}$ to V_{CCA} should be used to ensure that bus contention, excessive currents, or oscillations do not occur during power-up/power-down. The size of the pull-up resistor is based upon the current-sinking capability of the $\overline{OE}$ driver.

The recommended power-up sequence is the following:

1. Apply power to either V_{CC}.
2. Apply power to the T/$\overline{R}$ input (Logic HIGH for A-to-B operation; Logic LOW for B-to-A operation) and to the respective data inputs (A Port or B Port). This may occur at the same time as Step 1.
3. Apply power to other V_{CC}.
4. Drive the $\overline{OE}$ input LOW to enable the device.

The recommended power-down sequence is the following:

1. Drive $\overline{OE}$ input HIGH to disable the device.
2. Remove power from either V_{CC}.
3. Remove power from other V_{CC}.

Absolute Maximum Ratings (Note 1)

Supply Voltage	
V_{CCA}	−0.5V to +4.6V
V_{CCB}	−0.5V to +4.6V
DC Input Voltage (V_I)	
I/O Port A	−0.5V to +4.6V
I/O Port B	−0.5V to +4.6V
Control Inputs (T/$\overline{R}$, $\overline{OE}$)	−0.5V to +4.6V
Output Voltage (V_O) (Note 2)	
Outputs 3-STATE	−0.5V to +4.6V
Outputs Active (A_n)	−0.5V to V_{CCA} + 0.5V
Outputs Active (B_n)	−0.5V to V_{CCB} + 0.5V
DC Input Diode Current (I_{IK}) V_I < 0V	−50 mA
DC Output Diode Current (I_{OK})	
V_O < 0V	−50 mA
V_O > V_{CC}	+50 mA
DC Output Source/Sink Current (I_{OH}/I_{OL})	−50 mA / +50 mA
DC V_{CC} or Ground Current per Supply Pin (I_{CC})	±100 mA
Storage Temperature Range (T_{STG})	−65°C to +150°C

Recommended Operating Conditions (Note 3)

Power Supply Operating (V_{CCA} or V_{CCB})	1.1V to 3.6V
Input Voltage	
Port A	0.0V to 3.6V
Port B	0.0V to 3.6V
Control Inputs (T/$\overline{R}$, $\overline{OE}$)	0.0V to V_{CCA}
Output Current in I_{OH}/I_{OL}	
V_{CC0}	
3.0V to 3.6V	±24 mA
2.3V to 2.7V	±18 mA
1.65V to 1.95V	±6 mA
1.4V to 1.65V	±2 mA
1.1V to 1.4V	±0.5 mA
Free Air Operating Temperature (T_A)	−40°C to +85°C
Minimum Input Edge Rate ($\Delta V/\Delta t$)	
$V_{CCA/B}$ = 1.1V to 3.6V	10 ns/V

Note 1: The "Absolute Maximum Ratings" are those values beyond which the safety of the device cannot be guaranteed. The device should not be operated at these limits. The parametric values defined in the Electrical Characteristics tables are not guaranteed at the absolute maximum ratings. The "Recommended Operating Conditions" table will define the conditions for actual device operation.

Note 2: I_O Absolute Maximum Rating must be observed.

Note 3: All unused inputs must be held at V_{CCI} or GND.

DC Electrical Characteristics

Symbol	Parameter	Conditions	V_{CCI} (V)	V_{CCO} (V)	Min	Max	Units
V_{IH} (Note 4)	High Level Input	Data Inputs A_n, B_n	2.7 - 3.6	1.1 - 3.6	2.0		V
			2.3 - 2.7		1.6		
			1.65 - 2.3		0.65 x V_{CCI}		
			1.4 - 1.65		0.65 x V_{CCI}		
			1.1 - 1.4		0.9 x V_{CCI}		
		Control Pins/$\overline{OE}$, T/$\overline{R}$ (Referenced to V_{CCA})	2.7 - 3.6	1.1 - 3.6	2.0		
			2.3 - 2.7		1.6		
			1.65 - 2.3		0.65 x V_{CCA}		
			1.4 - 1.65		0.65 x V_{CCA}		
			1.1 - 1.4		0.9 x V_{CCA}		
V_{IL} (Note 4)	Low Level Input Voltage	Data Inputs A_n, B_n	2.7 - 3.6	1.1 - 3.6		0.8	V
			2.3 - 2.7			0.7	
			1.65 - 2.3			0.35 x V_{CCI}	
			1.4 - 1.65			0.35 x V_{CCI}	
			1.1 - 1.4			0.1 x V_{CCI}	
		Control Pins/$\overline{OE}$, T/$\overline{R}$ (Referenced to V_{CCA})	2.7 - 3.6	1.1 - 3.6		0.8	
			2.3 - 2.7			0.7	
			1.65 - 2.3			0.35 x V_{CCA}	
			1.4 - 1.65			0.35 x V_{CCA}	
			1.1 - 1.4			0.1 x V_{CCA}	

DC Electrical Characteristics (Continued)

Symbol	Parameter	Conditions	V_{CCI} (V)	V_{CCO} (V)	Min	Max	Units
V_{OH}	High Level Output Voltage	I_{OH} = −100 µA	1.1 - 3.6	1.1 - 3.6	V_{CC0} - 0.2		V
(Note 5)		I_{OH} = −12 mA	2.7	2.7	2.2		
		I_{OH} = −18 mA	3.0	3.0	2.4		
		I_{OH} = −24 mA	3.0	3.0	2.2		
		I_{OH} = −6 mA	2.3	2.3	2.0		
		I_{OH} = −12 mA	2.3	2.3	1.8		
		I_{OH} = −18 mA	2.3	2.3	1.7		
		I_{OH} = −6 mA	1.65	1.65	1.25		
		I_{OH} = −2 mA	1.4	1.4	1.05		
		I_{OH} = −0.5 mA	1.1	1.1	0.75 x V_{CC0}		
V_{OL}	Low Level Output Voltage	I_{OL} = 100µA	1.1 - 3.6	1.1- 3.6		0.2	V
(Note 5)		I_{OL} = 12 mA	2.7	2.7		0.4	
		I_{OL} = 18 mA	3.0	3.0		0.4	
		I_{OL} = 24 mA	3.0	3.0		0.55	
		I_{OL} =12 mA	2.3	2.3		0.4	
		I_{OL} = 18 mA	2.3	2.3		0.6	
		I_{OL} = 6 mA	1.65	1.65		0.3	
		I_{OL} = 2 mA	1.4	1.4		0.35	
		I_{OL} = 0.5 mA	1.1	1.1		0.3 x V_{CC0}	
I_I	Input Leakage Current. Control Pins	V_I = V_{CCA} or GND	1.1 - 3.6	3.6		±1.0	µA
I_{OFF}	Power Off Leakage Current	A_n, V_I or V_O = 0V to 3.6V	0	3.6		±10.0	µA
		B_n, V_I or V_O = 0V to 3.6V	3.6	0		±10.0	
I_{OZ}	3-STATE Output Leakage	A_n, B_n $\overline{OE}$ = V_{IH}	3.6	3.6		±10.0	µA
(Note 6)	0 ≤ V_O ≤ 3.6V	B_n, $\overline{OE}$ = Don't Care	0	3.6		+10.0	
	V_I = V_{IH} or V_{IL}	A_n, $\overline{OE}$ = Don't Care	3.6	0		+10.0	
$I_{CCA/B}$ (Note 7)	Quiescent Supply Current	V_I = V_{CCI} or GND; I_O = 0	1.1 - 3.6	1.1 - 3.6		20.0	µA
I_{CCZ} (Note 7)	Quiescent Supply Current	V_I = V_{CCI} or GND; I_O = 0	1.1 - 3.6	1.1 - 3.6		20.0	µA
I_{CCA}	Quiescent Supply Current	V_I = V_{CCA} or GND; I_O = 0	0	1.1 - 3.6		−10.0	µA
		V_I = V_{CCA} or GND; I_O = 0	1.1 - 3.6	0		10.0	µA
I_{CCB}	Quiescent Supply Current	V_I = V_{CCB} or GND; I_O = 0	1.1 - 3.6	0		−10.0	µA
		V_I = V_{CCB} or GND; I_O = 0	0	1.1 - 3.6		10.0	µA
$\Delta I_{CCA/B}$	Increase in I_{CC} per Input; Other Inputs at V_{CC} or GND	V_{IH} = 3.0	3.6	3.6		500	µA

Note 4: V_{CCI} = the V_{CC} associated with the data input under test.

Note 5: V_{CCO} = the V_{CC} associated with the output under test.

Note 6: Don't Care = Any valid logic level.

Note 7: Reflects current per supply, V_{CCA} or V_{CCB}.

AC Electrical Characteristics V_{CCA} = 3.0V to 3.6V

Symbol	Parameter	$T_A = -40°C$ to $+85°C$										Units
		V_{CCB} = 3.0V to 3.6V		V_{CCB} = 2.3V to 2.7V		V_{CCB} = 1.65V to 1.95V		V_{CCB} = 1.4V to 1.6V		V_{CCB} = 1.1V to 1.3V		
		Min	Max	Min	Max	Min	Max	Min	Max	Min	Max	
t_{PLH}, t_{PHL}	Propagation Delay A to B	0.2	3.5	0.3	3.9	0.5	5.4	0.6	6.8	1.4	22.0	ns
	Propagation Delay B to A	0.2	3.5	0.2	3.8	0.3	4.0	0.5	4.3	0.8	13.0	
t_{PZH}, t_{PZL}	Output Enable $\overline{OE}$ to B	0.5	4.0	0.7	4.4	1.0	5.9	1.0	6.4	1.5	17.0	ns
	Output Enable $\overline{OE}$ to A	0.5	4.0	0.5	4.0	0.5	4.0	0.5	4.0	0.5	4.0	
t_{PHZ}, t_{PLZ}	Output Disable $\overline{OE}$ to B	0.2	3.8	0.2	4.0	0.7	4.8	1.5	6.2	2.0	17.0	ns
	Output Disable $\overline{OE}$ to A	0.2	3.7	0.2	3.7	0.2	3.7	0.2	3.7	0.2	3.7	

AC Electrical Characteristics V_{CCA} = 2.3V to 2.7V

Symbol	Parameter	$T_A = -40°C$ to $+85°C$										Units
		V_{CCB} = 3.0V to 3.6V		V_{CCB} = 2.3V to 2.7V		V_{CCB} = 1.65V to 1.95V		V_{CCB} = 1.4V to 1.6V		V_{CCB} = 1.1V to 1.3V		
		Min	Max	Min	Max	Min	Max	Min	Max	Min	Max	
t_{PLH}, t_{PHL}	Propagation Delay A to B	0.2	3.8	0.4	4.2	0.5	5.6	0.8	6.9	1.4	22.0	ns
	Propagation Delay B to A	0.3	3.9	0.4	4.2	0.5	4.5	0.5	4.8	1.0	7.0	
t_{PZH}, t_{PZL}	Output Enable $\overline{OE}$ to B	0.6	4.2	0.8	4.6	1.0	6.0	1.0	6.8	1.5	17.0	ns
	Output Enable $\overline{OE}$ to A	0.6	4.5	0.6	4.5	0.6	4.5	0.6	4.5	0.6	4.5	
t_{PHZ}, t_{PLZ}	Output Disable $\overline{OE}$ to B	0.2	4.1	0.2	4.3	0.7	4.8	1.5	6.7	2.0	17.0	ns
	Output Disable $\overline{OE}$ to A	0.2	4.0	0.2	4.0	0.2	4.0	0.2	4.0	0.2	4.0	

AC Electrical Characteristics V_{CCA} = 1.65V to 1.95V

Symbol	Parameter	$T_A = -40°C$ to $+85°C$										Units
		V_{CCB} = 3.0V to 3.6V		V_{CCB} = 2.3V to 2.7V		V_{CCB} = 1.65V to 1.95V		V_{CCB} = 1.4V to 1.6V		V_{CCB} = 1.1V to 1.3V		
		Min	Max	Min	Max	Min	Max	Min	Max	Min	Max	
t_{PLH}, t_{PHL}	Propagation Delay A to B	0.3	4.0	0.5	4.5	0.8	5.7	0.9	7.1	1.5	22.0	ns
	Propagation Delay B to A	0.5	5.4	0.5	5.6	0.8	5.7	1.0	6.0	1.2	8.0	
t_{PZH}, t_{PZL}	Output Enable $\overline{OE}$ to B	0.6	5.2	0.8	5.4	1.2	6.9	1.2	7.2	1.5	18.0	ns
	Output Enable $\overline{OE}$ to A	1.0	6.7	1.0	6.7	1.0	6.7	1.0	6.7	1.0	6.7	
t_{PHZ}, t_{PLZ}	Output Disable $\overline{OE}$ to B	0.2	5.1	0.2	5.2	0.8	5.2	1.5	7.0	2.0	17.0	ns
	Output Disable $\overline{OE}$ to A	0.5	5.0	0.5	5.0	0.5	5.0	0.5	5.0	0.5	5.0	

AC Electrical Characteristics V_{CCA} = 1.4V to 1.6V

Symbol	Parameter	$T_A = -40°C$ to $+85°C$										Units
		V_{CCB} = 3.0V to 3.6V		V_{CCB} = 2.3V to 2.7V		V_{CCB} = 1.65V to 1.95V		V_{CCB} = 1.4V to 1.6V		V_{CCB} = 1.1V to 1.3V		
		Min	Max	Min	Max	Min	Max	Min	Max	Min	Max	
t_{PLH}, t_{PHL}	Propagation Delay A to B	0.5	4.3	0.5	4.8	1.0	6.0	1.0	7.3	1.5	22.0	ns
	Propagation Delay B to A	0.6	6.8	0.8	6.9	0.9	7.1	1.0	7.3	1.3	9.5	
t_{PZH}, t_{PZL}	Output Enable $\overline{OE}$ to B	1.1	7.5	1.1	7.6	1.3	7.7	1.4	7.9	2.0	20.0	ns
	Output Enable $\overline{OE}$ to A	1.0	7.5	1.0	7.5	1.0	7.5	1.0	7.5	1.0	7.5	
t_{PHZ}, t_{PLZ}	Output Disable $\overline{OE}$ to B	0.4	6.1	0.4	6.2	0.9	6.2	1.5	7.5	2.0	18.0	ns
	Output Disable $\overline{OE}$ to A	1.0	6.0	1.0	6.0	1.0	6.0	1.0	6.0	1.0	6.0	

AC Electrical Characteristics V_{CCA} = 1.1V to 1.3V

Symbol	Parameter	$T_A = -40°C$ to $+85°C$										Units
		V_{CCB} = 3.0V to 3.6V		V_{CCB} = 2.3V to 2.7V		V_{CCB} = 1.65V to 1.95V		V_{CCB} = 1.4V to 1.6V		V_{CCB} = 1.1V to 1.3V		
		Min	Max	Min	Max	Min	Max	Min	Max	Min	Max	
t_{PLH}, t_{PHL}	Propagation Delay A to B	0.8	13.0	1.0	7.0	1.2	8.0	1.3	9.5	2.0	24.0	ns
	Propagation Delay B to A	1.4	22.0	1.4	22.0	1.5	22.0	1.5	22.0	2.0	24.0	
t_{PZH}, t_{PZL}	Output Enable $\overline{OE}$ to B	1.0	12.0	1.0	9.0	2.0	10.0	2.0	11.0	2.0	24.0	ns
	Output Enable $\overline{OE}$ to A	2.0	22.0	2.0	22.0	2.0	22.0	2.0	22.0	2.0	22.0	
t_{PHZ}, t_{PLZ}	Output Disable $\overline{OE}$ to B	1.0	15.0	0.7	7.0	1.0	8.0	2.0	10.0	2.0	20.0	ns
	Output Disable $\overline{OE}$ to A	2.0	15.0	2.0	12.0	2.0	12.0	2.0	12.0	2.0	12.0	

Capacitance

Symbol	Parameter	Conditions	$T_A = +25°C$	Units
			Typical	
C_{IN}	Input Capacitance	$V_{CCA} = V_{CCB} = 0.0V$, $V_I = 0V$ or $V_{CCA/B}$	4.0	pF
$C_{I/O}$	Input/Output Capacitance	$V_{CCA} = V_{CCB} = 3.3V$, $V_I = 0V$ or $V_{CCA/B}$	5.0	pF
C_{PD}	Power Dissipation Capacitance	$V_{CCA} = V_{CCB} = 3.3V$, $V_I = 0V$ or V_{CC}, F = 10 MHz	20.0	pF

AC Loading and Waveforms

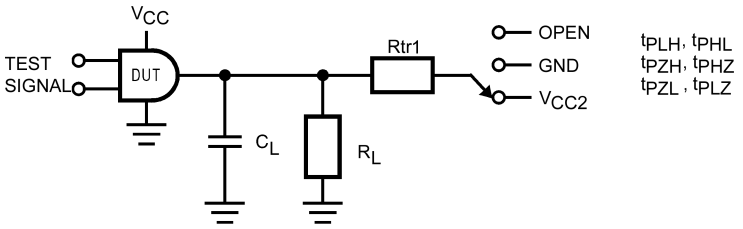

TEST	SWITCH
t_{PLH}, t_{PHL}	OPEN
t_{PLZ}, t_{PZL}	V_{CCO} x 2 at V_{CCO} = 3.3 ± 0.3V, 2.5V ± 0.2V, 1.8V ± 0.15V, 1.5V ± 0.1V, 1.2V ± 0.1V
t_{PHZ}, t_{PZH}	GND

FIGURE 1. AC Test Circuit

AC Load Table

V_{CCO}	C_L	R_L	Rtr1
1.2V ± 0.1V	15 pF	2 kΩ	2 kΩ
1.5V ± 0.1V	15 pF	2 kΩ	2 kΩ
1.8V ± 0.15V	30 pF	500Ω	500Ω
2.5V ± 0.2V	30 pF	500Ω	500Ω
3.3V ± 0.3V	30 pF	500Ω	500Ω

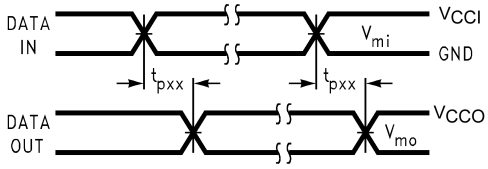

Note: Input $t_R = t_F$ = 2.0 ns, 10% to 90%

FIGURE 2. Waveform for Inverting and Non-Inverting Functions

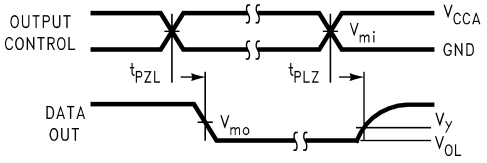

Note: Input $t_R = t_F$ = 2.0 ns, 10% to 90%

FIGURE 3. 3-STATE Output Low Enable and Disable Times for Low Voltage Logic

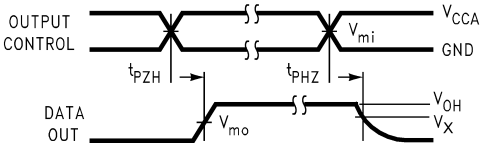

Note: Input $t_R = t_F$ = 2.0 ns, 10% to 90%

FIGURE 4. 3-STATE Output High Enable and Disable Times for Low Voltage Logic

Symbol	V_{CC}				
	3.3V ± 0.3V	2.5V ± 0.2V	1.8V ± 0.15V	1.5V ± 0.1V	1.2V ± 0.1V
V_{mi}	$V_{CCI}/2$	$V_{CCI}/2$	$V_{CCI}/2$	$V_{CCI}/2$	$V_{CCI}/2$
V_{mo}	$V_{CCO}/2$	$V_{CCO}/2$	$V_{CCO}/2$	$V_{CCO}/2$	$V_{CCO}/2$
V_X	V_{OH} − 0.3V	V_{OH} − 0.15V	V_{OH} − 0.15V	V_{OH} − 0.1V	V_{OH} − 0.1V
V_Y	V_{OL} + 0.3V	V_{OL} + 0.15V	V_{OL} + 0.15V	V_{OL} + 01V	V_{OL} + 01V

Note: For V_{mi}: $V_{CCI} = V_{CCA}$ for Control Pins T/$\overline{R}$ and $\overline{OE}$, or $V_{CCA}/2$

Tape and Reel Specification

Tape Format for MLP

Package Designator	Tape Section	Number Cavities	Cavity Status	Cover Tape Status
MPX	Leader (Start End)	125 (typ)	Empty	Sealed
	Carrier	3000	Filled	Sealed
	Trailer (Hub End)	75 (typ)	Empty	Sealed

TAPE DIMENSIONS inches (millimeters)

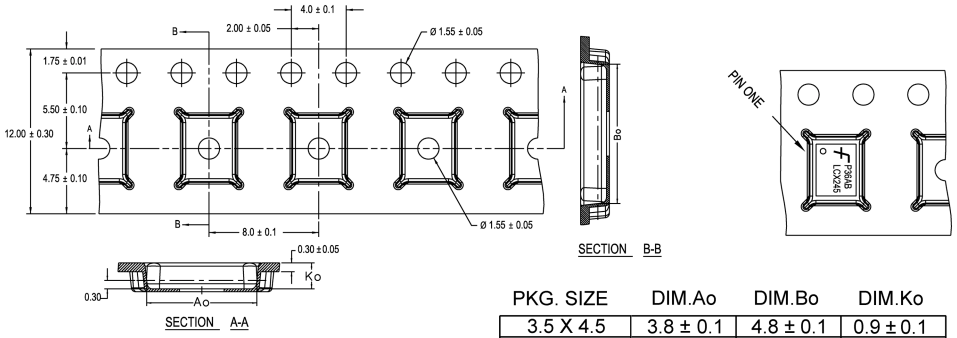

PKG. SIZE	DIM.Ao	DIM.Bo	DIM.Ko
3.5 X 4.5	3.8 ± 0.1	4.8 ± 0.1	0.9 ± 0.1
3.0 X 3.0	3.3 ± 0.1	3.3 ± 0.1	0.9 ± 0.1
2.5 X 4.5	2.8 ± 0.1	4.8 ± 0.1	0.9 ± 0.1
2.5 X 3.5	2.8 ± 0.1	3.8 ± 0.1	0.9 ± 0.1
2.5 X 3.0	2.8 ± 0.1	3.3 ± 0.1	0.9 ± 0.1
2.5 X 2.5	2.8 ± 0.1	2.8 ± 0.1	0.9 ± 0.1

DIMENSIONS ARE IN MILLIMETERS

NOTES: unless otherwise specified

1. Cummulative pitch for feeding holes and cavities (chip pockets) not to exceed 0.008[0.20] over 10 pitch span.
2. Smallest allowable bending radius.
3. Thru hole inside cavity is centered within cavity.
4. Tolerance is ±0.002[0.05] for these dimensions on all 12mm tapes.
5. Ao and Bo measured on a plane 0.120[0.30] above the bottom of the pocket.
6. Ko measured from a plane on the inside bottom of the pocket to the top surface of the carrier.
7. Pocket position relative to sprocket hole measured as true position of pocket. Not pocket hole.
8. Controlling dimension is millimeter. Diemension in inches rounded.

REEL DIMENSIONS inches (millimeters)

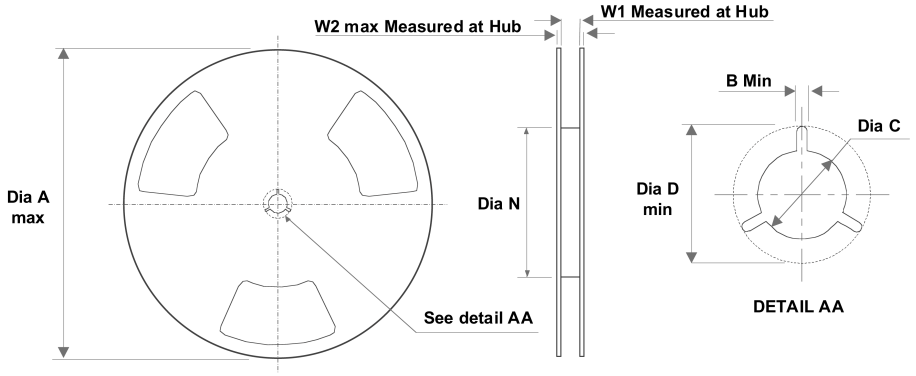

Tape Size	A	B	C	D	N	W1	W2
12 mm	13.0 (330.0)	0.059 (1.50)	0.512 (13.00)	0.795 (20.20)	2.165 (55.00)	0.488 (12.4)	0.724 (18.4)

Physical Dimensions inches (millimeters) unless otherwise noted

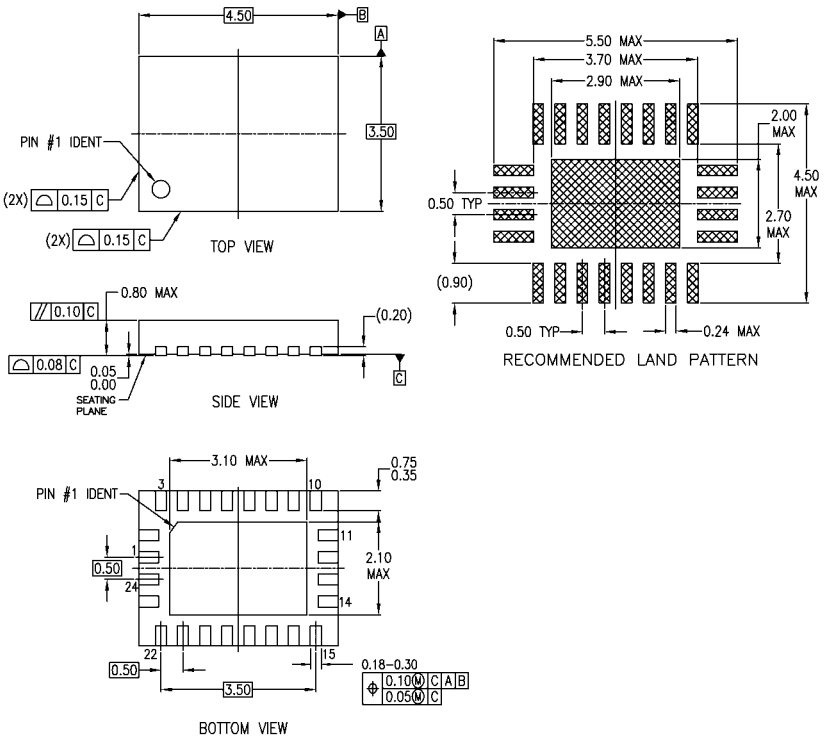

NOTES:

A. CONFORMS TO JEDEC REGISTRATION MO-220, VARIATION WFSD-2 FOR DIMENSIONS ONLY. PIN NUMBERING DOES NOT COMPLY.

B. DIMENSIONS ARE IN MILLIMETERS.

C. DIMENSIONS AND TOLERANCES PER ASME Y14.5M, 1994

MLP024BrevC

24-Terminal Molded Leadless Package (MLP), JEDEC MO-220, 3.5mm x 4.5mm
Package Number MLP024B

Fairchild does not assume any responsibility for use of any circuitry described, no circuit patent licenses are implied and Fairchild reserves the right at any time without notice to change said circuitry and specifications.

LIFE SUPPORT POLICY

FAIRCHILD'S PRODUCTS ARE NOT AUTHORIZED FOR USE AS CRITICAL COMPONENTS IN LIFE SUPPORT DEVICES OR SYSTEMS WITHOUT THE EXPRESS WRITTEN APPROVAL OF THE PRESIDENT OF FAIRCHILD SEMICONDUCTOR CORPORATION. As used herein:

1. Life support devices or systems are devices or systems which, (a) are intended for surgical implant into the body, or (b) support or sustain life, and (c) whose failure to perform when properly used in accordance with instructions for use provided in the labeling, can be reasonably expected to result in a significant injury to the user.
2. A critical component in any component of a life support device or system whose failure to perform can be reasonably expected to cause the failure of the life support device or system, or to affect its safety or effectiveness.

www.fairchildsemi.com