FX30KMJ-2

High-Speed Switching Use
Pch Power MOS FET

REJ03G1447-0200
(Previous: MEJ02G0283-0101)
Rev.2.00
Aug 07, 2006

Features

- Drive voltage : 4 V
- V_{DSS} : –100 V
- $r_{DS(ON)\ (max)}$: 0.143 Ω
- I_D : –30 A
- Integrated Fast Recovery Diode (TYP.) : 100 ns
- Viso : 2000 V

Outline

RENESAS Package code: PRSS0003AB-A
(Package name: TO-220FN)

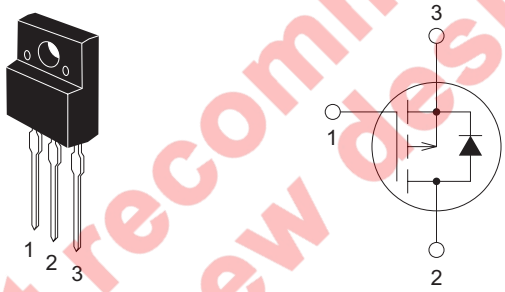

1. Gate
2. Drain
3. Source

Not recommend for new design

Applications

Motor control, Lamp control, Solenoid control, DC-DC converters, etc.

Maximum Ratings

(Tc = 25°C)

Parameter	Symbol	Ratings	Unit	Conditions
Drain-source voltage	V_{DSS}	–100	V	V_{GS} = 0 V
Gate-source voltage	V_{GSS}	±20	V	V_{DS} = 0 V
Drain current	I_D	–30	A	
Drain current (Pulsed)	I_{DM}	–120	A	
Avalanche drain current (Pulsed)	I_{DA}	–30	A	L = 30 µH
Source current	I_S	–30	A	
Source current (Pulsed)	I_{SM}	–120	A	
Maximum power dissipation	P_D	30	W	
Channel temperature	Tch	– 55 to +150	°C	
Storage temperature	Tstg	– 55 to +150	°C	
Isolation voltage	Viso	2000	V	AC for 1 minute, Terminal to case
Mass	—	2.0	g	Typical value

Electrical Characteristics

(Tch = 25°C)

Parameter	Symbol	Min	Typ	Max	Unit	Test Conditions
Drain-source breakdown voltage	$V_{(BR)DSS}$	–100	—	—	V	I_D = –1 mA, V_{GS} = 0 V
Gate-source leakage current	I_{GSS}	—	—	±0.1	µA	V_{GS} = ±20 V, V_{DS} = 0 V
Drain-source leakage current	I_{DSS}	—	—	–0.1	mA	V_{DS} = –100 V, V_{GS} = 0 V
Gate-source threshold voltage	$V_{GS(th)}$	–1.3	–1.8	–2.3	V	I_D = –1 mA, V_{DS} = –10 V
Drain-source on-state resistance	$r_{DS(ON)}$	—	0.113	0.143	Ω	I_D = –15 A, V_{GS} = –10 V
Drain-source on-state resistance	$r_{DS(ON)}$	—	0.135	0.176	Ω	I_D = –15 A, V_{GS} = – 4 V
Drain-source on-state voltage	$V_{DS(ON)}$	—	–1.65	–2.15	V	I_D = –15 A, V_{GS} = –10 V
Forward transfer admittance	$\lvert y_{fs} \rvert$	—	20	—	S	I_D = –15 A, V_{DS} = –10 V
Input capacitance	Ciss	—	4450	—	pF	V_{DS} = –10 V, V_{GS} = 0 V, f = 1MHz
Output capacitance	Coss	—	330	—	pF	
Reverse transfer capacitance	Crss	—	170	—	pF	
Turn-on delay time	$t_{d(on)}$	—	16	—	ns	V_{DD} = –50 V, I_D = –15 A, V_{GS} = –10 V, R_{GEN} = R_{GS} = 50 Ω
Rise time	t_r	—	54	—	ns	
Turn-off delay time	$t_{d(off)}$	—	270	—	ns	
Fall time	t_f	—	129	—	ns	
Source-drain voltage	V_{SD}	—	–1.0	–1.5	V	I_S = –15 A, V_{GS} = 0 V
Thermal resistance	$R_{th(ch-c)}$	—	—	4.17	°C/W	Channel to case
Reverse recovery time	t_{rr}	—	100	—	ns	I_S = –30 A, d_{is}/d_t = 100 A/µs

Not recommend for new design

Performance Curves

Power Dissipation Derating Curve

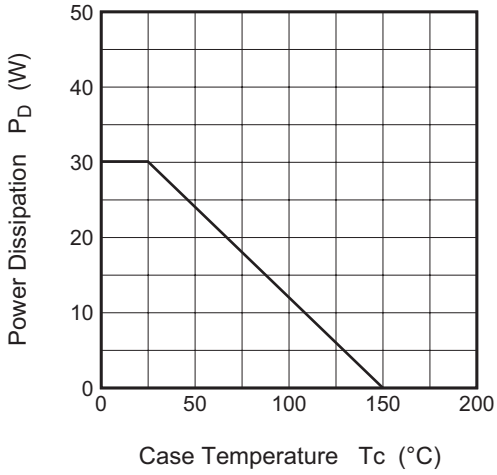

Maximum Safe Operating Area

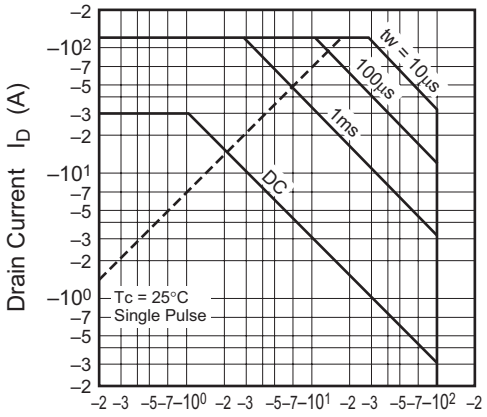

Output Characteristics (Typical)

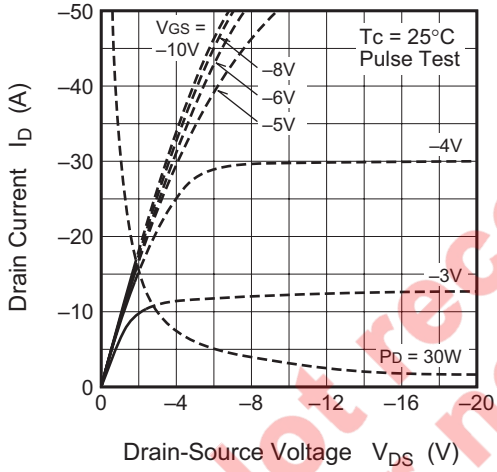

Output Characteristics (Typical)

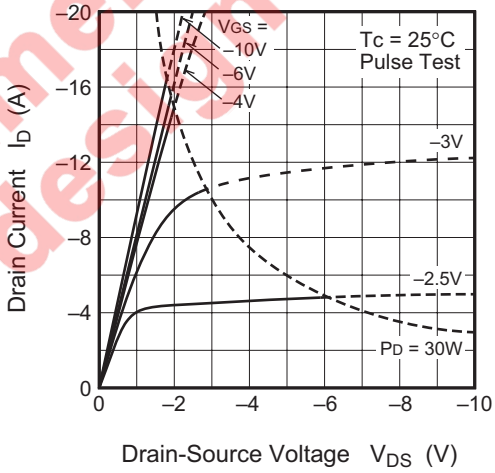

On-State Voltage vs. Gate-Source Voltage (Typical)

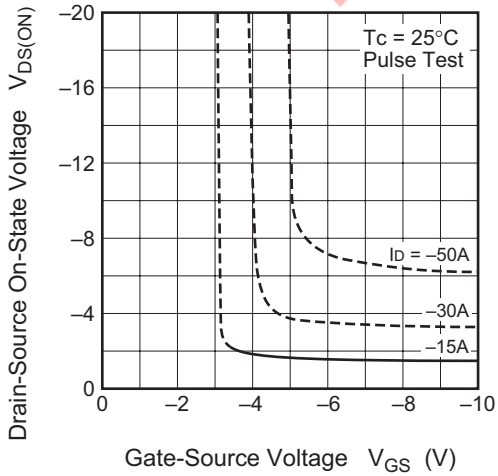

On-State Resistance vs. Drain Current (Typical)

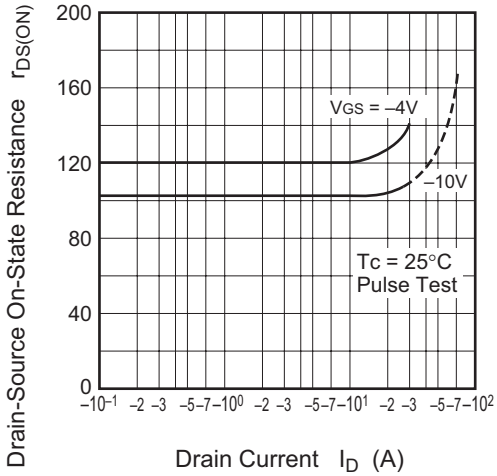

Not recommend for new design

Transfer Characteristics (Typical)

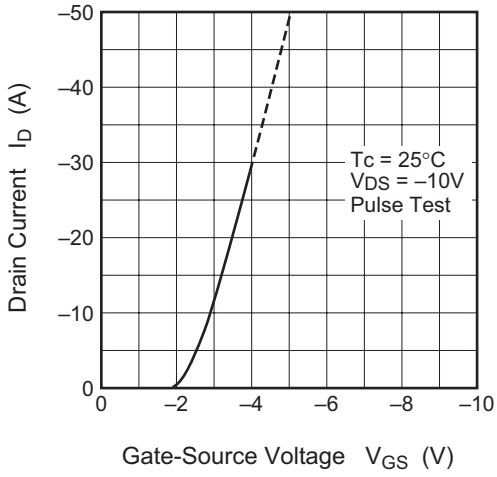

Forward Transfer Admittance vs. Drain Current (Typical)

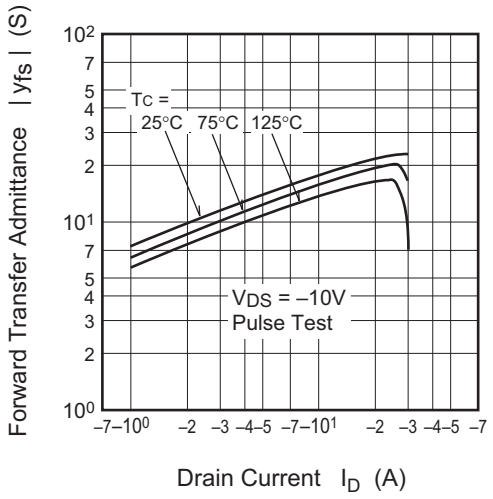

Capacitance vs. Drain-Source Voltage (Typical)

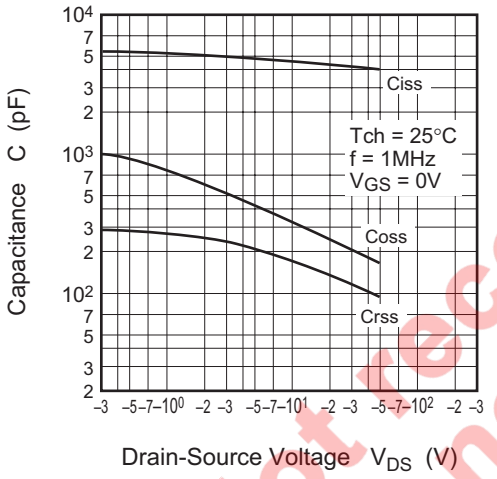

Switching Characteristics (Typical)

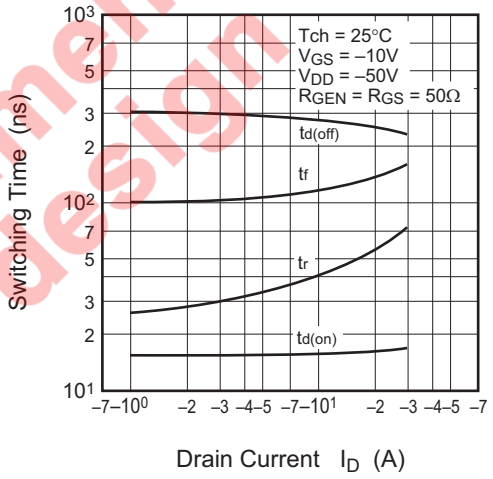

Gate-Source Voltage vs. Gate Charge (Typical)

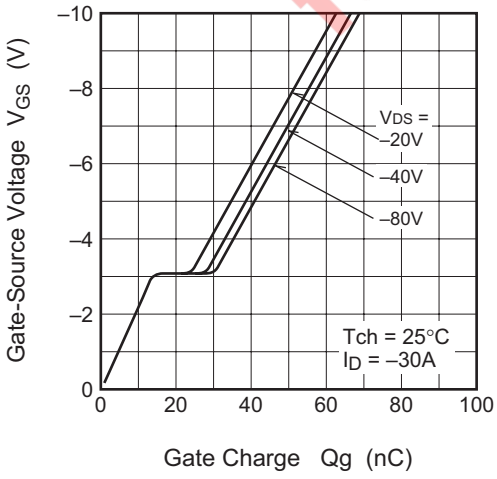

Source-Drain Diode Forward Characteristics (Typical)

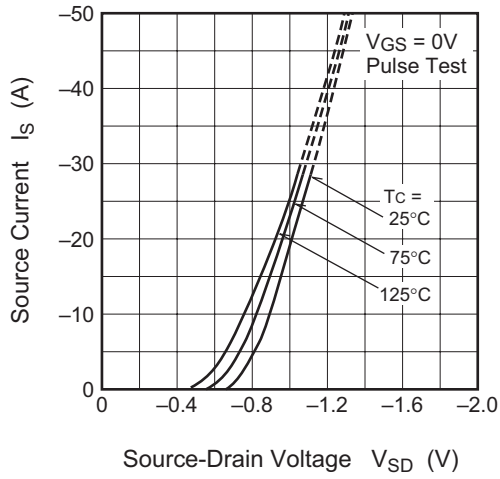

Not recommend for new design

On-State Resistance vs. Channel Temperature (Typical)

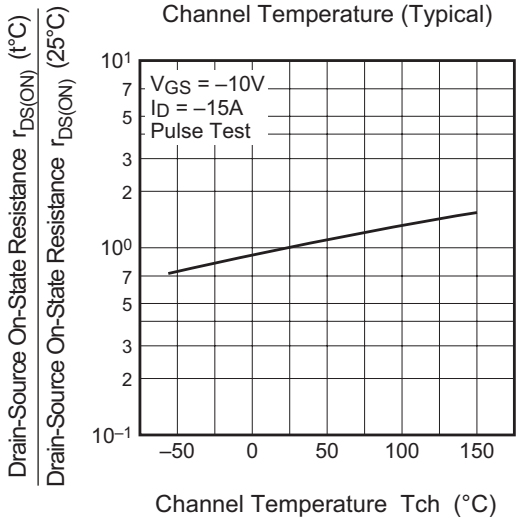

Threshold Voltage vs. Channel Temperature (Typical)

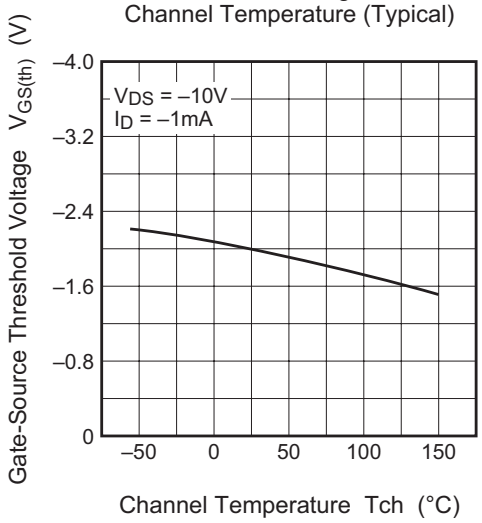

Breakdown Voltage vs. Channel Temperature (Typical)

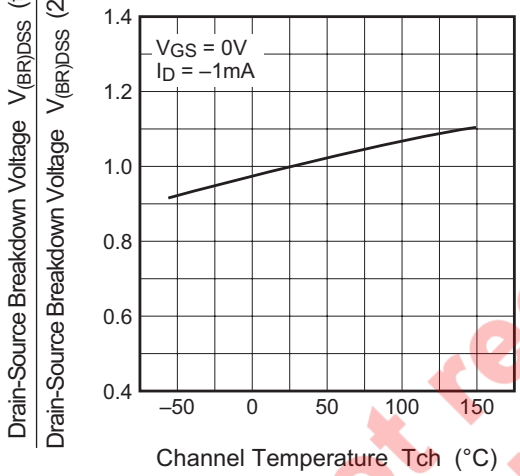

Transient Thermal Impedance Characteristics

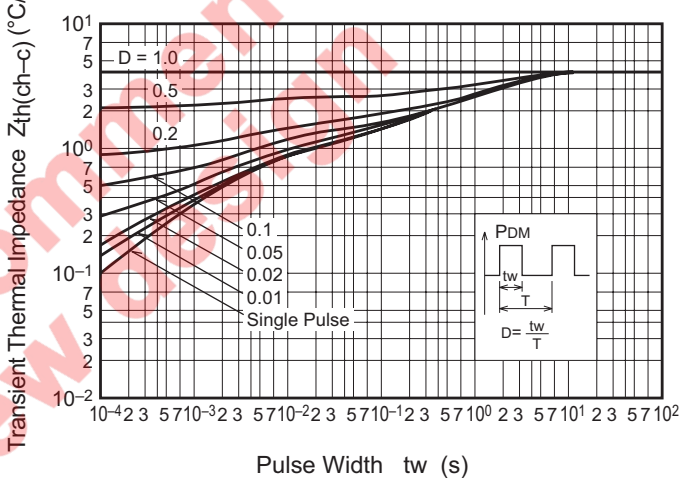

Switching Time Measurement Circuit

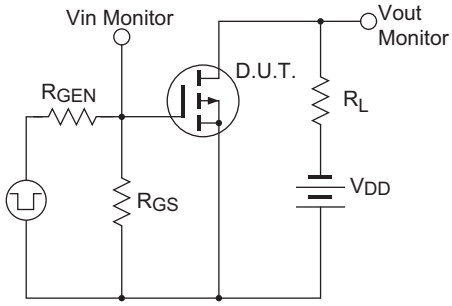

Switching Waveform

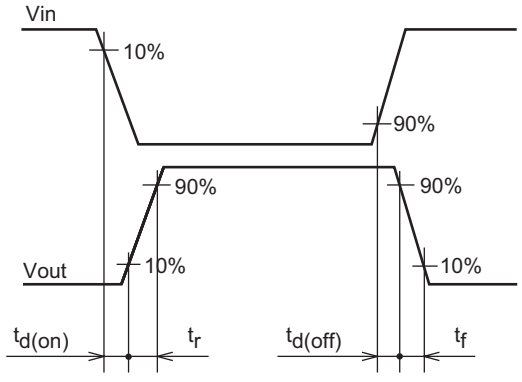

Not recommend for new design

Package Dimensions

Package Name	JEITA Package Code	RENESAS Code	Previous Code	MASS[Typ.]
TO-220FN	—	PRSS0003AB-A	—	2.0g

Unit: mm

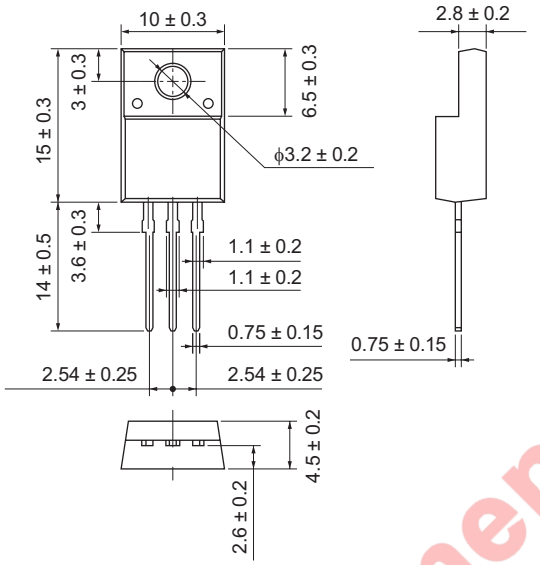

Not recommend for new design

Order Code

Lead form	Standard packing	Quantity	Standard order code	Standard order code example
Straight type	Plastic Magazine (Tube)	50	Type name	FX30KMJ-2
Lead form	Plastic Magazine (Tube)	50	Type name – Lead forming code	FX30KMJ-2-A8

Note: Please confirm the specification about the shipping in detail.

Renesas Technology Corp. Sales Strategic Planning Div. Nippon Bldg., 2-6-2, Ohte-machi, Chiyoda-ku, Tokyo 100-0004, Japan

Keep safety first in your circuit designs!
1. Renesas Technology Corp. puts the maximum effort into making semiconductor products better and more reliable, but there is always the possibility that trouble may occur with them. Trouble with semiconductors may lead to personal injury, fire or property damage.
Remember to give due consideration to safety when making your circuit designs, with appropriate measures such as (i) placement of substitutive, auxiliary circuits, (ii) use of nonflammable material or (iii) prevention against any malfunction or mishap.

Notes regarding these materials
1. These materials are intended as a reference to assist our customers in the selection of the Renesas Technology Corp. product best suited to the customer's application; they do not convey any license under any intellectual property rights, or any other rights, belonging to Renesas Technology Corp. or a third party.
2. Renesas Technology Corp. assumes no responsibility for any damage, or infringement of any third-party's rights, originating in the use of any product data, diagrams, charts, programs, algorithms, or circuit application examples contained in these materials.
3. All information contained in these materials, including product data, diagrams, charts, programs and algorithms represents information on products at the time of publication of these materials, and are subject to change by Renesas Technology Corp. without notice due to product improvements or other reasons. It is therefore recommended that customers contact Renesas Technology Corp. or an authorized Renesas Technology Corp. product distributor for the latest product information before purchasing a product listed herein.
The information described here may contain technical inaccuracies or typographical errors.
Renesas Technology Corp. assumes no responsibility for any damage, liability, or other loss rising from these inaccuracies or errors.
Please also pay attention to information published by Renesas Technology Corp. by various means, including the Renesas Technology Corp. Semiconductor home page (http://www.renesas.com).
4. When using any or all of the information contained in these materials, including product data, diagrams, charts, programs, and algorithms, please be sure to evaluate all information as a total system before making a final decision on the applicability of the information and products. Renesas Technology Corp. assumes no responsibility for any damage, liability or other loss resulting from the information contained herein.
5. Renesas Technology Corp. semiconductors are not designed or manufactured for use in a device or system that is used under circumstances in which human life is potentially at stake. Please contact Renesas Technology Corp. or an authorized Renesas Technology Corp. product distributor when considering the use of a product contained herein for any specific purposes, such as apparatus or systems for transportation, vehicular, medical, aerospace, nuclear, or undersea repeater use.
6. The prior written approval of Renesas Technology Corp. is necessary to reprint or reproduce in whole or in part these materials.
7. If these products or technologies are subject to the Japanese export control restrictions, they must be exported under a license from the Japanese government and cannot be imported into a country other than the approved destination.
Any diversion or reexport contrary to the export control laws and regulations of Japan and/or the country of destination is prohibited.
8. Please contact Renesas Technology Corp. for further details on these materials or the products contained therein.

Not recommend for new design

RENESAS SALES OFFICES

http://www.renesas.com

Refer to "**http://www.renesas.com/en/network**" for the latest and detailed information.

Renesas Technology America, Inc.
450 Holger Way, San Jose, CA 95134-1368, U.S.A
Tel: <1> (408) 382-7500, Fax: <1> (408) 382-7501

Renesas Technology Europe Limited
Dukes Meadow, Millboard Road, Bourne End, Buckinghamshire, SL8 5FH, U.K.
Tel: <44> (1628) 585-100, Fax: <44> (1628) 585-900

Renesas Technology (Shanghai) Co., Ltd.
Unit 204, 205, AZIACenter, No.1233 Lujiazui Ring Rd, Pudong District, Shanghai, China 200120
Tel: <86> (21) 5877-1818, Fax: <86> (21) 6887-7898

Renesas Technology Hong Kong Ltd.
7th Floor, North Tower, World Finance Centre, Harbour City, 1 Canton Road, Tsimshatsui, Kowloon, Hong Kong
Tel: <852> 2265-6688, Fax: <852> 2730-6071

Renesas Technology Taiwan Co., Ltd.
10th Floor, No.99, Fushing North Road, Taipei, Taiwan
Tel: <886> (2) 2715-2888, Fax: <886> (2) 2713-2999

Renesas Technology Singapore Pte. Ltd.
1 Harbour Front Avenue, #06-10, Keppel Bay Tower, Singapore 098632
Tel: <65> 6213-0200, Fax: <65> 6278-8001

Renesas Technology Korea Co., Ltd.
Kukje Center Bldg. 18th Fl., 191, 2-ka, Hangang-ro, Yongsan-ku, Seoul 140-702, Korea
Tel: <82> (2) 796-3115, Fax: <82> (2) 796-2145

Renesas Technology Malaysia Sdn. Bhd
Unit 906, Block B, Menara Amcorp, Amcorp Trade Centre, No.18, Jalan Persiaran Barat, 46050 Petaling Jaya, Selangor Darul Ehsan, Malaysia
Tel: <603> 7955-9390, Fax: <603> 7955-9510

© 2006. Renesas Technology Corp., All rights reserved. Printed in Japan.

Colophon .6.0